Drainage Report

US-20, MP 291 to Idaho Falls

Project No. A023(244), Key No. 23244 and

US-20, Bonneville Co Line to MP 291

Project No. A024(149), Key No. 24149

Bingham and Bonneville Counties, Idaho

Prepared for:

Idaho Transportation Department





DAVID EVANS AND ASSOCIATES INC.

DEA Project No. HRKS00000018

December 2025

Table of Contents

1.0 Introduction 1

2.0 Existing Conditions 1

2.1 Geotechnical Investigation 2

2.2 Floodplains 2

3.0 Methodology 2

3.1 Design Standards 2

3.2 Rational Method 2

3.3 Modified Rational Method-Bowstring 3

4.0 Proposed Drainage Conditions 4

5.0 Utilities 4

6.0 Conclusion 4

Figures

Figure 1. Project Corridor Map. 1

Tables

Table 1. Summary of Design Standards. 2

Appendices

Appendix A Drainage Basin Maps

Appendix B Drainage Calculations

Appendix C Typical Sections

Appendix D Drainage Plans and Profiles

Appendix E FIRM Maps

Appendix F Geotechnical References

1.0 Introduction

This report summarizes the roadway drainage analysis and design for two projects: US-20, MP 291 to Idaho Falls and US-20, Bonneville Co Line to MP 291. The projects will widen the existing two-lane highway to a four-lane divided highway for approximately 20 miles from milepost 281 to 301.4 near Idaho Falls, Idaho. An overview map of the US-20 Arco to Idaho Falls Corridor, highlighting these two projects is shown below. See Figure 1.

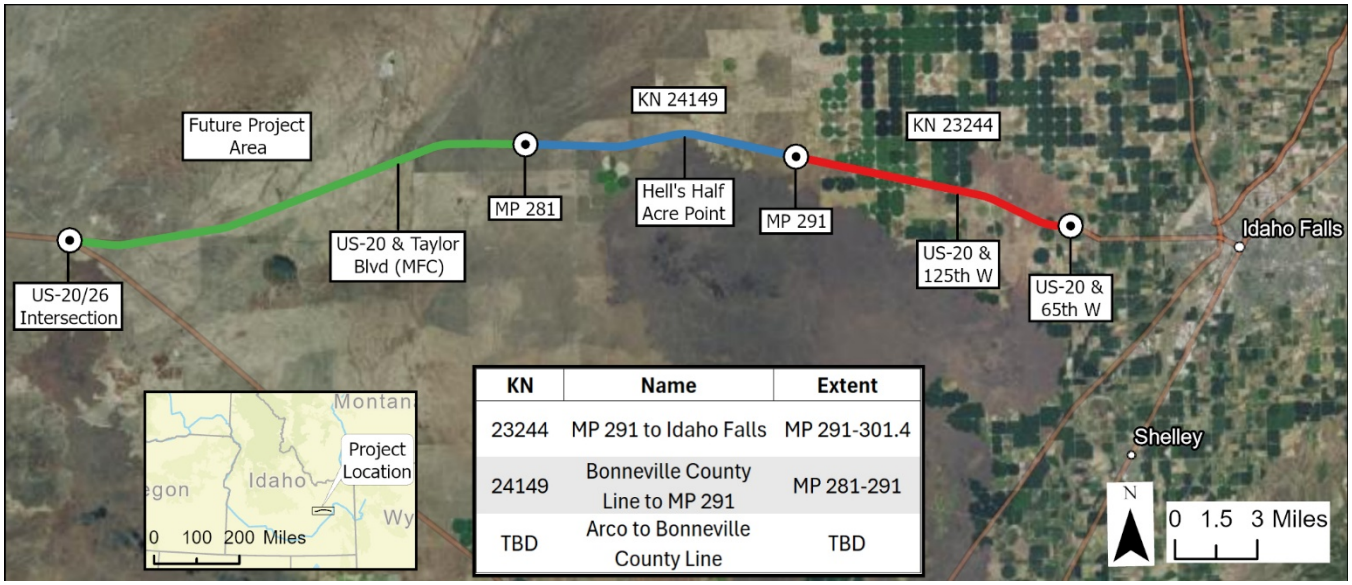

KN	Name	Extent
23244	MP 291 to Idaho Falls	MP 291-301.4
24149	Bonneville County Line to MP 291	MP 281-291
TBD	Arco to Bonneville County Line	TBD

Figure 1. Project Corridor Map.

2.0 Existing Conditions

This section of US-20 crosses the eastern Snake River Plain, an area characterized by rolling terrain, covered with windblown silt overlaying fractured basalt. Basalt outcrops are common, especially near the Hell's Half Acre area. The basalt rock in this region contains fissures that allow surface water to infiltrate into the subsurface, contributing to the Eastern Snake River Plain aquifer.

This region can be described as a "sink area" for surface runoff; west of the project location, the Big and Little Lost Rivers disappear or infiltrate into the aquifer through highly porous and fractured basalt. The surface water from these sink areas eventually resurfaces at Thousand Springs near Bliss, Idaho, where it emerges out of the cliffs above the Snake River.

Currently, roadway runoff sheet flows off the roadway, down the roadway embankment and is conveyed, pooled, and infiltrated in roadside ditches. During large rain events, runoff reaches the culvert locations joins off-site runoff from the surrounding areas and flows off-site. Off-site runoff from the surrounding Snake River Plain is conveyed under US-20 at ninety-four (94) locations within the project limits. A separate Culvert Hydraulics report was prepared for this project.

2.1 Geotechnical Investigation

Shannon and Wilson conducted infiltration tests at 8 locations along the project corridor from MP 264.6 to MP 299.4 in July 2025. Guelph Infiltration (GI) test were performed in in-situ upper wind-blown silty sands. Measured infiltration rates ranged from 1.7 to 3.5 inches per hour, resulting in an average of 2.9 inches per hour. Per geotechnical recommendations, the design infiltration rate should be reduced by 50% of the measured rate, yielding 1.45 inches per hour. For this project, a conservative infiltration rate of 1.0 inches per hour was assumed for design. See ***Appendix F*** for geotechnical references.

2.2 Floodplains

This project area does not have mapped floodplains generated by the Federal Emergency Management Agency (FEMA), Map Service tool. See ***Appendix E*** for FIRM maps.

3.0 Methodology

3.1 Design Standards

The IDEQ; Idaho Catalog of Stormwater Best Management Practices, Bonneville County Standard Specifications, and the ITD Design Manual were all referred to in setting project design standards and assumptions. These design standards are summarized in Table 1.

Table 1. Summary of Design Standards.

Feature	Design Requirements	Reference
Storage Volume	100-year	Bonneville County
Water Quality Volume	0.5-inch x Impervious Areas	IDEQ
Primary Conveyance (Storm Sewers)	25-year	ITD 645.00
Minimum Pipe Size – Culverts under Roadways < 70 ft length	18-inch	ITD 640.02
Minimum Pipe Size – Culverts under roadways, > 70 feet length	24-inch	ITD 640.02
Minimum Pipe Size – Culverts under driveways, Approaches, Medians	12-inch	ITD 640.02
Min Pipe Size – Storm Sewers, Siphons, Irrigation Systems	12-inch	ITD 640.02

3.2 Rational Method

The Rational Method was used to develop peak flows for conveyance on this project. This method is one of the most used methods to determine peak discharges from small areas, usually smaller than 200 acres. The equation for this method is:

[Q = CIA]

*Where: Q = Flow (cfs)
C = Dimensionless runoff coefficient
I = Rainfall intensity (in/hr)
A = Drainage Area (acres)

A C value of 0.90 was used on all impervious areas and 0.20 was used for all the pervious areas within the drainage basins. A time of concentration of 10-minutes was used for peak flow and volume calculations.

3.3 Modified Rational Method-Bowstring

The Bowstring Method was used to estimate storage requirements for the given design storm (100-year) using a series of hydrographs for different storm durations (t). Depending upon the relative magnitude of the time of concentration (Tc) and the storm duration, the shape of the hydrograph generated with this method varies from triangular to trapezoidal. The recession period (TR) of the hydrograph is given by:

$$T_R=1.67Tp$$

Where: T_p=Tc when $t \geq T_c$; or,

T_p=t, when $t < T_c$.

The volume (V) under the hydrograph at a given time (t) is given by:

$$V(t)=1.34\ Q_p t \text{ for } t \leq T_c \text{ (triangular hydrograph)}$$

$$V(t)=Q_p t+0.34Q_p Tc \text{ for } t>T_c \text{ (trapezoidal hydrograph)}$$

Using these equations, the base of the triangular hydrograph is equal to 2.67t. The time base of the trapezoidal hydrograph is t + 1.67Tc. The top width of the trapezoid is equal to t - Tc. Using this method, the hydrograph for each storm duration is overlaid with the outflow hydrograph. The following equation is used to determine the outflow hydrograph:

$$V_{OUT}(t)=Q_{OUT}t$$

The critical storm duration is the storm duration that results in the maximum required detention storage.

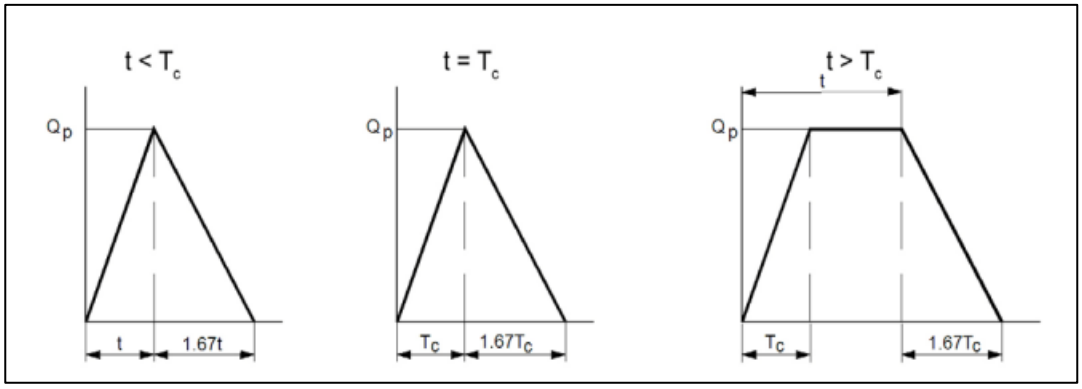

Time of concentration (the longest time required for a particle to travel from the watershed divide to the watershed outlet) was determined using the Natural Resources Conservation Service (NRCS) method. With the Bowstring Method, the peak runoff flow for each of the storm durations was overlaid with the peak outflow to determine if storage requirements are met.

4.0 Proposed Drainage Conditions

Under the proposed condition, runoff will continue to sheet flow off the roadway into roadside and median swales. The proposed swale conditions were analyzed for capacity compared to the Water Quality (0.5"x Impervious Area.) and Storage (100-yr) volume. Due to varying longitudinal slope throughout each drainage basin, an average representative slope was determined for each basin. The calculated total swale storage volume was maximized by including ditch berms, spaced along the length of the swale using the average representative slope. Drainage basins roll plots for both Package 1 and Package 2 of the project are provided in ***Appendix A***.

Roadside swales will be constructed with 2' flat bottom, 1.5' depth, and varying side slopes. The typical roadway foreslope ranges from 6:1 (H:V) up to 2:1, and the backslope is 4:1. The water quality and 100-yr design storm are stored and infiltrated throughout the swales due to proper placement of ditch berms throughout.

By spacing ditch berms along the length of the swale, both the water quality and 100-yr design storm can be stored and infiltrated in the swales. Swale calculations are provided in ***Appendix B***. See ***Appendix C*** and ***Appendix D*** for the typical sections and Drainage Plans/Profiles.

5.0 Utilities

Existing utilities include fiber optic lines which are located within right-of-way. Proposed drainage infrastructure is not expected to impact existing utilities. See Utility plans to verify and for more information.

6.0 Conclusion

This report documents the drainage design for KN 23244 and 24149. The drainage design for this project meets the requirements of Bonneville County, IDEQ, and ITD.

Appendix A

Drainage Basin Maps

DAVID EVANS AND ASSOCIATES INC.

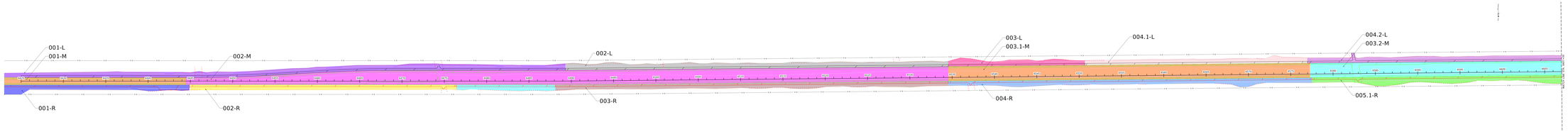

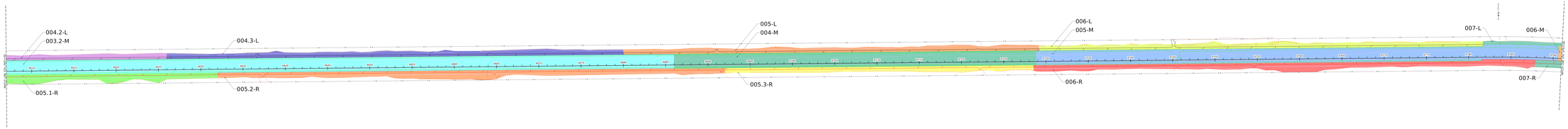

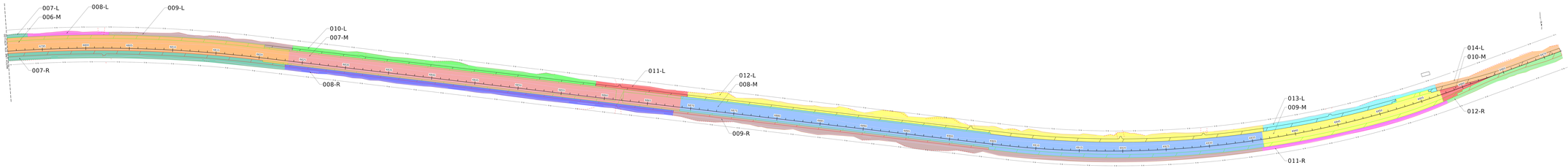

LEGEND

IMPERVIOUS MEDIAN SHED AREA

IMPERVIOUS LEFT SHED AREA

IMPERVIOUS RIGHT SHED AREA

PERVIOUS SHED AREA

PROJECT NO.	PROPOSED DRAINAGE MAIN MAP US 20, ARCO TO SAND PALIS PACKAGE 1	DESIGNED DRAWN CHECKED APPROVED	IDAHO TRANSPORTATION DEPARTMENT DAVID EVANS AND ASSOCIATES INC Formerly
A023(246)			

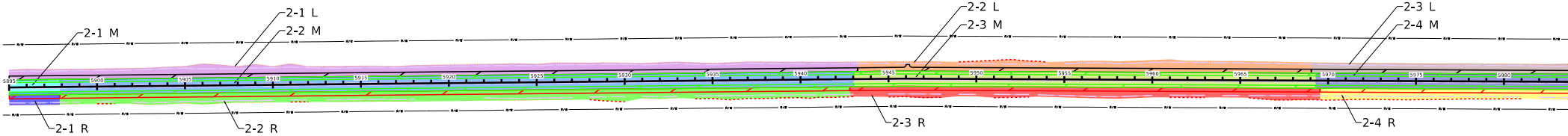
2-1 M
2-1 L
2-2 M
2-2 L
2-3 M
2-3 L
2-4 M
2-1 R
2-2 R
2-3 R
2-4 R
5895
5900
5905
5910
5915
5920
5925
5930
5935
5940
5945
5950
5955
5960
5965
5970
5975
5980

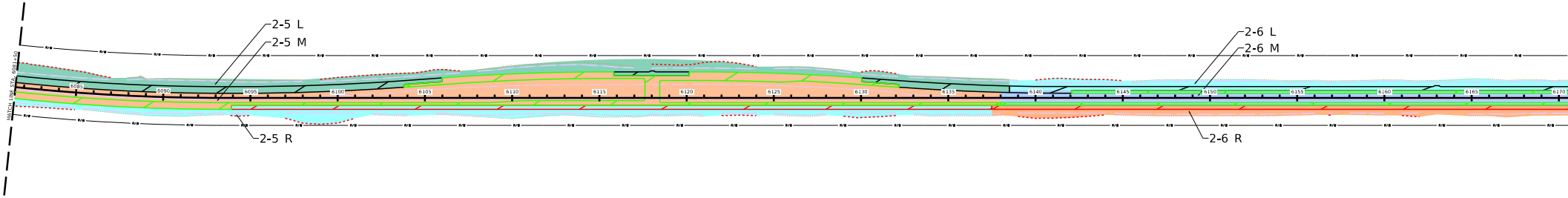
MATCH LINE STA. 6081+50
2-5 L
2-5 M
2-6 L
2-6 M
2-5 R
2-6 R
6085
6090
6095
6100
6105
6110
6115
6120
6125
6130
6135
6140
6145
6150
6155
6160
6165
6170

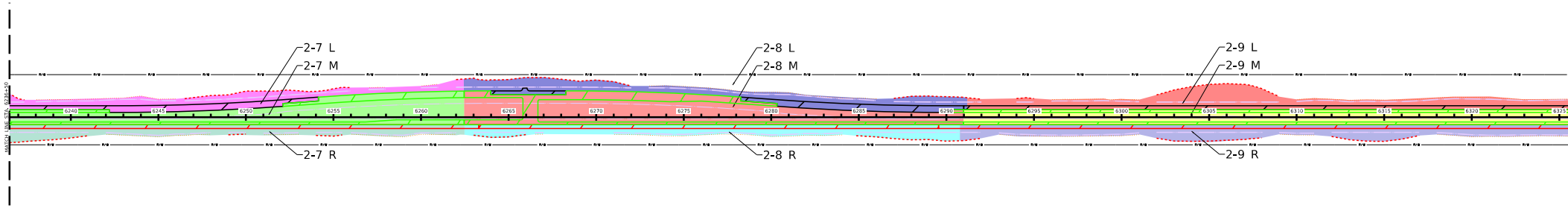
MATCH LINE STA. 6236+50
2-7 L
2-7 M
2-8 L
2-8 M
2-9 L
2-9 M
2-7 R
2-8 R
2-9 R
6240
6245
6250
6255
6260
6265
6270
6275
6280
6285
6290
6295
6300
6305
6310
6315
6320
6325

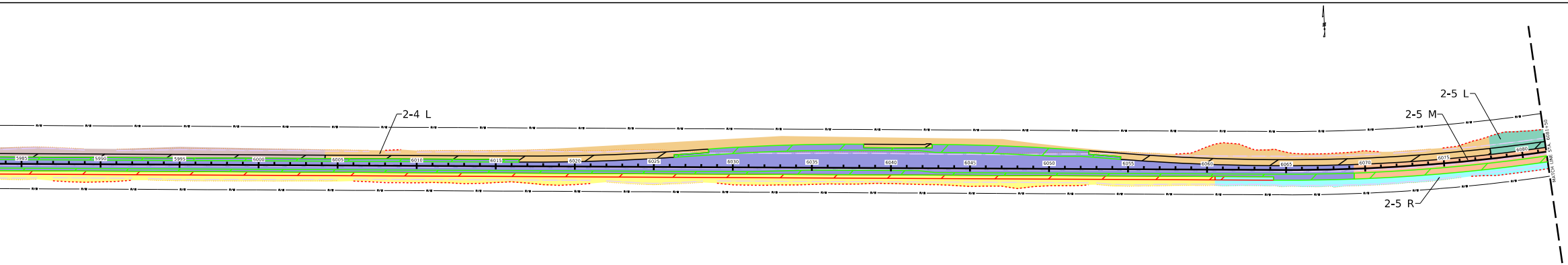
2-4 L
2-5 L
2-5 M
2-5 R
5985
5990
5995
6000
6005
6010
6015
6020
6025
6030
6035
6040
6045
6050
6055
6060
6065
6070
6075
6080
MATCH LINE STA. 6081+50
R/W

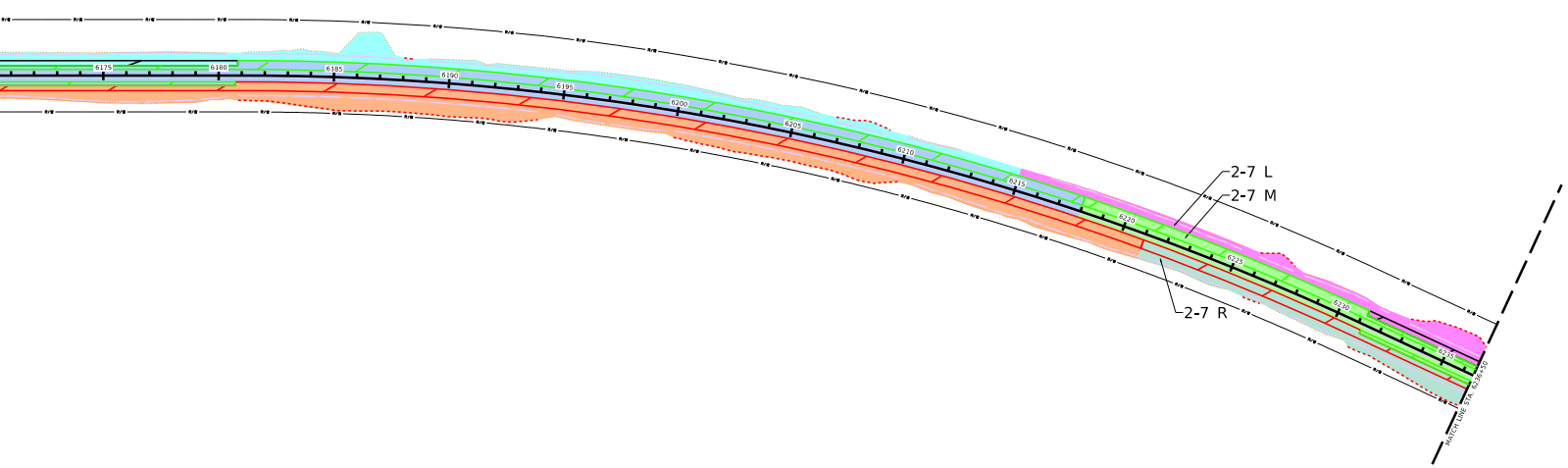
2-7 L
2-7 M
2-7 R
6175
6180
6185
6190
6195
6200
6205
6210
6215
6220
6225
6230
6235
MATCH LINE STA. 6236+50
R/W

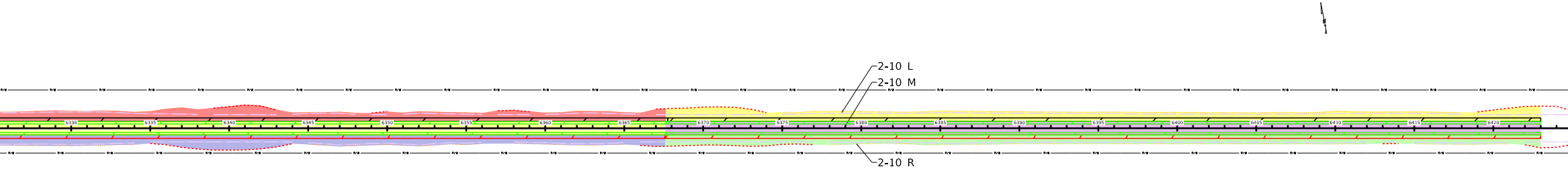
2-10 L
2-10 M
2-10 R
6330
6335
6340
6345
6350
6355
6360
6365
6370
6375
6380
6385
6390
6395
6400
6405
6410
6415
6420
R/W

LEGEND

▨	IMPERVIOUS MEDIAN SHED AREA
▨	IMPERVIOUS LEFT SHED AREA
▨	IMPERVIOUS RIGHT SHED AREA
🟦	PERVIOUS SHED AREA

100 0 100 200
Scale: 1" = 200'

PROJECT NO.	PROPOSED DRAINAGE BASIN MAP	CADD FILE NAME
A023(244)	US 20, ARCO TO IDAHO FALLS PACKAGE 2	COUNTY BONNEVILLE KEY NUMBER 23244

IDAHO
TRANSPORTATION
DEPARTMENT

DAVID EVANS AND ASSOCIATES INC.

Horrocks.

Appendix B

Drainage Calculations

DAVID EVANS AND ASSOCIATES INC.

[Linked Data]
[User Input Data]
[Calculated Data]

KN 24394 US20, Arco to Idaho Falls

Basin	Owner	Impervious Area (ft^2)	Impervious Area (Ac.)	Pervious Area (ft^2)	Pervious Area (Ac.)	C-Value, Weighted	Total Basin Area (ft^2)	Reports To
001-R	ITD	62,713	1.44	85,673	1.97	0.50	148,385	SW-6423-R
002-R	ITD	70,105	1.61	119,151	2.74	0.46	189,256	SW-6444-R
003-R	ITD	25,769	0.59	50,905	1.17	0.44	76,674	SW-6476-R
004-R	ITD	102,109	2.34	178,113	4.09	0.46	280,222	SW-6488-R
005.1-R	ITD	31,496	0.72	56,319	1.29	0.45	87,815	SW-6534-R
005.2-R	ITD	63,652	1.46	115,683	2.66	0.45	179,335	SW-6548-R
005.3-R	ITD	120,597	2.77	303,456	6.97	0.40	424,052	SW-6577-R
005.4-R	ITD	134,627	3.09	294,288	6.76	0.42	428,915	SW-6632-R
006-R	ITD	81,011	1.86	145,239	3.33	0.45	226,249	SW-6690-R
007-R	ITD	142,481	3.27	283,681	6.51	0.43	426,162	SW-6728-R
008-R	ITD	129,967	2.98	165,970	3.81	0.51	295,938	SW-6787-R
009-R	ITD	99,762	2.29	179,099	4.11	0.45	278,861	SW-6823-R
010-R	ITD	80,358	1.84	358,862	8.24	0.33	439,220	SW-6868-R
011-R	ITD	0	0.00	88,205	2.02	0.20	88,205	SW-6945-R
012-R	ITD	50,557	1.16	60,626	1.39	0.52	111,183	SW-6957-R
001-M	ITD	68,624	1.58	115,803	2.66	0.46	184,427	SW-6423-M
002-M	ITD	319,872	7.34	1,117,313	25.65	0.36	1,437,185	SW-6488-M
003.1-M	ITD	140,138	3.22	594,580	13.65	0.33	734,719	SW-6534-M
003.2-M	ITD	376,097	8.63	1,494,327	34.30	0.34	1,870,424	SW-6577-M
004-M	ITD	137,180	3.15	599,945	13.77	0.33	737,125	SW-6690-M
005-M	ITD	235,234	5.40	831,855	19.10	0.35	1,067,090	SW-6728-M
006-M	ITD	122,757	2.82	462,877	10.63	0.35	585,635	SW-6784-M
007-M	ITD	174,939	4.02	605,916	13.91	0.36	780,856	SW-6823-M
008-M	ITD	236,586	5.43	938,611	21.55	0.34	1,175,197	SW-6868-M
009-M	ITD	97,099	2.23	288,101	6.61	0.38	385,199	SW-6941-M
010-M	ITD	7,891	0.18	30,683	0.70	0.34	38,574	SW-6957-M
001-L	ITD	146,803	3.37	301,074	6.91	0.43	447,876	SW-6423-L
002-L	ITD	99,456	2.28	214,993	4.94	0.42	314,449	SW-6489-L
003-L	ITD	35,517	0.82	79,946	1.84	0.42	115,463	SW-6534-L
004.1-L	ITD	57,898	1.33	108,290	2.49	0.44	166,188	SW-6550-L
004.2-L	ITD	110,555	2.54	202,844	4.66	0.45	313,399	SW-6577-L
004.3-L	ITD	120,026	2.76	223,971	5.14	0.44	343,997	SW-6626-L
005-L	ITD	109,173	2.51	199,555	4.58	0.45	308,728	SW-6689-L
006-L	ITD	118,797	2.73	214,209	4.92	0.45	333,007	SW-6711-L
007-L	ITD	0	0.00	47,120	1.08	0.20	47,120	SW-6729-L
008-L	ITD	0	0.00	39,732	0.91	0.20	39,732	SW-6781-L
009-L	ITD	7,075	0.16	86,865	1.99	0.25	93,940	SW-6793-L
010-L	ITD	77,598	1.78	153,194	3.52	0.44	230,792	SW-6802-L
011-L	ITD	24,002	0.55	40,374	0.93	0.46	64,375	SW-6823-L
012-L	ITD	199,170	4.57	343,975	7.90	0.46	543,145	SW-6858-L
013-L	ITD	62,437	1.43	82,832	1.90	0.50	145,269	SW-6869-L
014-L	ITD	55,786	1.28	80,507	1.85	0.49	136,293	SW-6936-L

PROJECT:	**KN 24394 US20, Arco to Idaho Falls**				**[Linked Data]**
BASIN:	001-R				**[User Input Data]**
DESIGNER:	**BCC, DEA**	**REPORTS TO:**	**SW-6423-R**		**[Calculated Data]**
DATE:	**9/29/2025**				

Basin Data

	SF	Acre	C
Impervious Area	62,713	1.440	0.9
Pervious Area	85,673	1.967	0.2
Total Area	148,385	3.406	

Composite "C"	0.50	
Area * "C"	1.689	

			Rational Method Peak Flows (Q=C*I*A)		
Time of Concentration:	10.00	min			
25-Year Intensity	3.61	in/hr	25-year Peak	6.15	cfs
50-Year Intensity	4.16	in/hr	50-year Peak	7.09	cfs
100-year Intensity:	4.69	in/hr	100-year Peak	7.99	cfs

Selected Design Storm:	100-Year
Design Infiltration Rate (in/hr):	1.00

PROJECT:	**KN 24394 US20, Arco to Idaho Falls**			
BASIN:	001-R			
DESIGNER:	**BCC, DEA**	**REPORTS TO:**	**SW-6423-R**	
DATE:	**9/29/2025**			

[Linked Data]
[User Input Data]
[Calculated Data]

MODIFIED RATIONAL METHOD (BOWSTRING) FOR REQUIRED DETENTION STORAGE

#1 Time Inc. (min.)	#2 Time Inc. (sec.) (#1*60)	#3 Intensity (in./hr.)	#4 Q dev. (cfs) (A*C*#3)	#5 V in (cu. ft.)	#6 V out (cu. ft.) (Outf.*#2)	#7 Req. Storage (cu. ft.) (#5-#6)
10.00	600.00	4.69	7.99	6,422	185	6,238
5	300	6.77	11.44	4,597	92	4,505
10	600	4.69	7.92	6,369	185	6,185
15	900	3.64	6.15	6,788	277	6,511
20	1,200	3.16	5.34	7,502	369	7,133
25	1,500	2.69	4.54	7,733	461	7,271
30	1,800	2.21	3.73	7,481	554	6,927
35	2,100	2.06	3.48	8,023	646	7,377
40	2,400	1.91	3.23	8,415	738	7,677
45	2,700	1.77	2.98	8,657	830	7,827
50	3,000	1.62	2.73	8,749	923	7,827
55	3,300	1.47	2.48	8,690	1015	7,676
60	3,600	1.32	2.23	8,481	1107	7,374
65	3,900	1.27	2.15	8,804	1199	7,604
70	4,200	1.22	2.06	9,075	1292	7,784
75	4,500	1.17	1.98	9,296	1384	7,912
80	4,800	1.12	1.89	9,466	1476	7,990
85	5,100	1.07	1.81	9,586	1568	8,018
90	5,400	1.02	1.72	9,655	1661	7,994
95	5,700	0.97	1.64	9,673	1753	7,920
100	6,000	0.92	1.55	9,641	1845	7,796
105	6,300	0.87	1.47	9,558	1937	7,620
110	6,600	0.82	1.39	9,424	2030	7,394
115	6,900	0.77	1.30	9,239	2122	7,118
120	7,200	0.72	1.22	9,004	2214	6,790
180	10,800	0.50	0.84	9,275	3321	5,954
360	21,600	0.27	0.46	9,981	6642	3,339
720	43,200	0.15	0.26	11,143	13284	0
1440	86,400	0.09	0.15	12,580	26568	0

PROJECT:	**KN 24394 US20, Arco to Idaho Falls**				[Linked Data]
BASIN:	001-R				[User Input Data]
DESIGNER:	**BCC, DEA**	**REPORTS TO:**	**SW-6423-R**		[Calculated Data]
DATE:	**9/29/2025**				

Bio-Infiltration Swales

Lowpoint Swale (Priority 1):

Width (feet):	0
Length (feet):	0
Sideslope 1 (H:V):	0
Sideslope 2 (H:V):	0
Max Depth (feet):	0
Max Volume When Full (CF):	0
LP Swale Infiltration Area (SF):	0

Road Slope Swale (Priority 2):	**Roadside Slope A**	**Roadside Slope B**
Base Width (feet):	2	2
Sideslope 1: (_H:1V)	2	2
Sideslope 2: (_H:V)	4	4
Longitudinal Slope (ft/ft):	0.0038	0.0062
Determination of Max Usable Swale Length Due to Slope:		
Max Water Depth At Downstream End (feet):	*1.5*	*1.5*
Swale Volume (CF):	*1480*	*907*
Length (feet):	*395*	*242*
Determination of Length of Bermed Swales:		
Swale Length (feet):	300	200
Storage Depth at U/S End (feet):	0.36	0.26
Swale Volume (CF):	1434	894
Infiltration Area Per Bermed Swale (SF):	2274	1456
Number of Bermed Swales:	2	6
Total Swale Infiltration Area (SF):	4548	8736
Total Swale Volume (CF):	2868	5361
Available Length 1 (feet):	691	1298
Proposed Length 2 (feet):	600	1200
Difference (feet):	91 OK! (Design> Req'd	98 OK! (Design> Req'd)

Total Design Storage (CF):	**8,229**
Total Infiltration Area (SF):	13,284
Swale Infiltration Rate (cfs):	0.308
Total Infiltration Rate (cfs):	0.308
Total Time to Drain (Hrs):	7.24
Required Treatment Volume:	
Basin Imp. Area x 0.5 inches /12 (CF)	2,613 OK! (Design> Req'd)
Required Storage Volume:	
Maximum Storage From Rational Column #7 (CF):	8,018 OK! (Design> Req'd)
Target Time to Drain:	
From Design Requirements (Hrs):	72 OK! (Design<Req'd)

PROJECT:	**KN 24394 US20, Arco to Idaho Falls**				**[Linked Data]**
BASIN:	002-R				**[User Input Data]**
DESIGNER:	**BCC, DEA**	**REPORTS TO:**	**SW-6444-R**		**[Calculated Data]**
DATE:	**9/29/2025**				

Basin Data

	SF	Acre	C
Impervious Area	70,105	1.609	0.9
Pervious Area	119,151	2.735	0.2
Total Area	189,256	4.345	

Composite "C"	0.46	
Area * "C"	1.996	

			Rational Method Peak Flows (Q=C*I*A)		
Time of Concentration:	10.00	min			
25-Year Intensity	3.61	in/hr	25-year Peak	7.26	cfs
50-Year Intensity	4.16	in/hr	50-year Peak	8.37	cfs
100-year Intensity:	4.69	in/hr	100-year Peak	9.44	cfs

Selected Design Storm:	100-Year
Design Infiltration Rate (in/hr):	1.00

PROJECT:	**KN 24394 US20, Arco to Idaho Falls**			
BASIN:	002-R			
DESIGNER:	**BCC, DEA**	**REPORTS TO:**	**SW-6444-R**	
DATE:	**9/29/2025**			

[Linked Data]
[User Input Data]
[Calculated Data]

MODIFIED RATIONAL METHOD (BOWSTRING) FOR REQUIRED DETENTION STORAGE

#1 Time Inc. (min.)	#2 Time Inc. (sec.) (#1*60)	#3 Intensity (in./hr.)	#4 Q dev. (cfs) (A*C*#3)	#5 V in (cu. ft.)	#6 V out (cu. ft.) (Outf.*#2)	#7 Req. Storage (cu. ft.) (#5-#6)
10.00	600.00	4.69	9.44	7,587	284	7,303
5	300	6.77	13.51	5,431	142	5,289
10	600	4.69	9.36	7,525	284	7,241
15	900	3.64	7.26	8,019	426	7,593
20	1,200	3.16	6.31	8,863	568	8,295
25	1,500	2.69	5.36	9,136	710	8,425
30	1,800	2.21	4.41	8,838	852	7,986
35	2,100	2.06	4.11	9,479	994	8,485
40	2,400	1.91	3.82	9,942	1136	8,806
45	2,700	1.77	3.52	10,228	1278	8,950
50	3,000	1.62	3.23	10,336	1420	8,916
55	3,300	1.47	2.93	10,267	1562	8,705
60	3,600	1.32	2.63	10,020	1704	8,316
65	3,900	1.27	2.53	10,401	1846	8,554
70	4,200	1.22	2.43	10,722	1988	8,733
75	4,500	1.17	2.33	10,983	2130	8,852
80	4,800	1.12	2.23	11,184	2272	8,911
85	5,100	1.07	2.14	11,325	2414	8,911
90	5,400	1.02	2.04	11,407	2556	8,850
95	5,700	0.97	1.94	11,428	2698	8,730
100	6,000	0.92	1.84	11,390	2841	8,549
105	6,300	0.87	1.74	11,292	2983	8,309
110	6,600	0.82	1.64	11,134	3125	8,009
115	6,900	0.77	1.54	10,916	3267	7,649
120	7,200	0.72	1.44	10,638	3409	7,229
180	10,800	0.50	1.00	10,957	5113	5,844
360	21,600	0.27	0.54	11,791	10226	1,565
720	43,200	0.15	0.30	13,165	20452	0
1440	86,400	0.09	0.17	14,862	40904	0

PROJECT:	**KN 24394 US20, Arco to Idaho Falls**				[Linked Data]
BASIN:	002-R				[User Input Data]
DESIGNER:	**BCC, DEA**	**REPORTS TO:**	**SW-6444-R**		[Calculated Data]
DATE:	**9/29/2025**				

Bio-Infiltration Swales

Lowpoint Swale (Priority 1):

Width (feet):	0
Length (feet):	0
Sideslope 1 (H:V):	0
Sideslope 2 (H:V):	0
Max Depth (feet):	0
Max Volume When Full (CF):	0
LP Swale Infiltration Area (SF):	0

Road Slope Swale (Priority 2):	**Roadside Slope A**	**Roadside Slope B**
Base Width (feet):	2	2
Sideslope 1: (_H:1V)	2	2
Sideslope 2: (_H:V)	4	4
Longitudinal Slope (ft/ft):	0.0016	0.0097
Determination of Max Usable Swale Length Due to Slope:		
Max Water Depth At Downstream End (feet):	*1.5*	*1.5*
Swale Volume (CF):	*3516*	*580*
Length (feet):	*938*	*155*
Determination of Length of Bermed Swales:		
Swale Length (feet):	150	150
Storage Depth at U/S End (feet):	1.26	0.04
Swale Volume (CF):	1273	580
Infiltration Area Per Bermed Swale (SF):	1542	995
Number of Bermed Swales:	1	19
Total Swale Infiltration Area (SF):	1542	18910
Total Swale Volume (CF):	1273	11014
Available Length 1 (feet):	224	2927
Proposed Length 2 (feet):	150	2850
Difference (feet):	74 **OK! (Design> Req'd**	77 **OK! (Design> Req'd)**

Total Design Storage (CF):	**12,287**
Total Infiltration Area (SF):	20,452
Swale Infiltration Rate (cfs):	0.473
Total Infiltration Rate (cfs):	0.473
Total Time to Drain (Hrs):	5.25
Required Treatment Volume:	
Basin Imp. Area x 0.5 inches /12 (CF)	2,921 **OK! (Design> Req'd)**
Required Storage Volume:	
Maximum Storage From Rational Column #7 (CF):	8,950 **OK! (Design> Req'd)**
Target Time to Drain:	
From Design Requirements (Hrs):	72 **OK! (Design<Req'd)**

PROJECT:	**KN 24394 US20, Arco to Idaho Falls**				**[Linked Data]**
BASIN:	003-R				**[User Input Data]**
DESIGNER:	**BCC, DEA**	**REPORTS TO:**	**SW-6476-R**		**[Calculated Data]**
DATE:	**9/29/2025**				

Basin Data

	SF	Acre	C
Impervious Area	25,769	0.592	0.9
Pervious Area	50,905	1.169	0.2
Total Area	76,674	1.760	

Composite "C"	0.44	
Area * "C"	0.766	

			Rational Method Peak Flows (Q=C*I*A)		
Time of Concentration:	10.00	min			
25-Year Intensity	3.61	in/hr	25-year Peak	2.79	cfs
50-Year Intensity	4.16	in/hr	50-year Peak	3.21	cfs
100-year Intensity:	4.69	in/hr	100-year Peak	3.62	cfs

Selected Design Storm:	100-Year
Design Infiltration Rate (in/hr):	1.00

PROJECT:	**KN 24394 US20, Arco to Idaho Falls**			
BASIN:	003-R			
DESIGNER:	**BCC, DEA**	**REPORTS TO:**	**SW-6476-R**	
DATE:	**9/29/2025**			

[Linked Data]
[User Input Data]
[Calculated Data]

MODIFIED RATIONAL METHOD (BOWSTRING) FOR REQUIRED DETENTION STORAGE

#1 Time Inc. (min.)	#2 Time Inc. (sec.) (#1*60)	#3 Intensity (in./hr.)	#4 Q dev. (cfs) (A*C*#3)	#5 V in (cu. ft.)	#6 V out (cu. ft.) (Outf.*#2)	#7 Req. Storage (cu. ft.) (#5-#6)
10.00	600.00	4.69	3.62	2,913	104	2,809
5	300	6.77	5.19	2,085	52	2,033
10	600	4.69	3.59	2,889	104	2,785
15	900	3.64	2.79	3,079	156	2,923
20	1,200	3.16	2.42	3,403	208	3,195
25	1,500	2.69	2.06	3,507	260	3,248
30	1,800	2.21	1.69	3,393	312	3,081
35	2,100	2.06	1.58	3,639	364	3,275
40	2,400	1.91	1.47	3,817	416	3,401
45	2,700	1.77	1.35	3,927	468	3,459
50	3,000	1.62	1.24	3,968	520	3,449
55	3,300	1.47	1.12	3,942	572	3,370
60	3,600	1.32	1.01	3,847	624	3,223
65	3,900	1.27	0.97	3,993	676	3,317
70	4,200	1.22	0.93	4,116	728	3,389
75	4,500	1.17	0.90	4,217	780	3,437
80	4,800	1.12	0.86	4,294	832	3,462
85	5,100	1.07	0.82	4,348	884	3,464
90	5,400	1.02	0.78	4,379	936	3,444
95	5,700	0.97	0.74	4,388	988	3,400
100	6,000	0.92	0.70	4,373	1040	3,333
105	6,300	0.87	0.67	4,335	1092	3,243
110	6,600	0.82	0.63	4,275	1144	3,131
115	6,900	0.77	0.59	4,191	1196	2,995
120	7,200	0.72	0.55	4,084	1248	2,836
180	10,800	0.50	0.38	4,207	1872	2,335
360	21,600	0.27	0.21	4,527	3743	784
720	43,200	0.15	0.12	5,055	7487	0
1440	86,400	0.09	0.07	5,706	14973	0

PROJECT:	**KN 24394 US20, Arco to Idaho Falls**				[Linked Data]
BASIN:	003-R				[User Input Data]
DESIGNER:	**BCC, DEA**	**REPORTS TO:**	**SW-6476-R**		[Calculated Data]
DATE:	**9/29/2025**				

Bio-Infiltration Swales

Lowpoint Swale (Priority 1):

Width (feet):	0
Length (feet):	0
Sideslope 1 (H:V):	0
Sideslope 2 (H:V):	0
Max Depth (feet):	0
Max Volume When Full (CF):	0
LP Swale Infiltration Area (SF):	0

Road Slope Swale (Priority 2):	**Roadside Slope A**	**Roadside Slope B**
Base Width (feet):	2	2
Sideslope 1: (_H:1V)	2	2
Sideslope 2: (_H:V)	4	4
Longitudinal Slope (ft/ft):	NA	0.0086
Determination of Max Usable Swale Length Due to Slope:		
Max Water Depth At Downstream End (feet):	*1.5*	*1.5*
Swale Volume (CF):	*0*	*654*
Length (feet):	*0*	*174*
Determination of Length of Bermed Swales:		
Swale Length (feet):	0	150
Storage Depth at U/S End (feet):	#VALUE!	0.21
Swale Volume (CF):	0	648
Infiltration Area Per Bermed Swale (SF):	0	1070
Number of Bermed Swales:	0	7
Total Swale Infiltration Area (SF):	0	7487
Total Swale Volume (CF):	0	4535
Available Length 1 (feet):	0	1171
Proposed Length 2 (feet):	0	1050
Difference (feet):	0 Good (Design< Stor	121 OK! (Design> Req'd)

Total Design Storage (CF):	**4,535**
Total Infiltration Area (SF):	7,487
Swale Infiltration Rate (cfs):	0.173
Total Infiltration Rate (cfs):	0.173
Total Time to Drain (Hrs):	5.55

Required Treatment Volume:

Basin Imp. Area x 0.5 inches /12 (CF) 1,074 OK! (Design> Req'd)

Required Storage Volume:

i 3,464 OK! (Design> Req'd)

Target Time to Drain:

From Design Requirements (Hrs): 72 OK! (Design<Req'd)

PROJECT:	**KN 24394 US20, Arco to Idaho Falls**				**[Linked Data]**
BASIN:	004-R				**[User Input Data]**
DESIGNER:	**BCC, DEA**	**REPORTS TO:**	**SW-6488-R**		**[Calculated Data]**
DATE:	**9/29/2025**				

Basin Data

	SF	Acre	C
Impervious Area	102,109	2.344	0.9
Pervious Area	178,113	4.089	0.2
Total Area	280,222	6.433	

Composite "C"	0.46	
Area * "C"	2.927	

			Rational Method Peak Flows (Q=C*I*A)		
Time of Concentration:	10.00	min			
25-Year Intensity	3.61	in/hr	25-year Peak	10.66	cfs
50-Year Intensity	4.16	in/hr	50-year Peak	12.28	cfs
100-year Intensity:	4.69	in/hr	100-year Peak	13.84	cfs

Selected Design Storm:	100-Year
Design Infiltration Rate (in/hr):	1.00

PROJECT:	**KN 24394 US20, Arco to Idaho Falls**			
BASIN:	004-R			
DESIGNER:	**BCC, DEA**	**REPORTS TO:**	**SW-6488-R**	
DATE:	**9/29/2025**			

[Linked Data]
[User Input Data]
[Calculated Data]

MODIFIED RATIONAL METHOD (BOWSTRING) FOR REQUIRED DETENTION STORAGE

#1 Time Inc. (min.)	#2 Time Inc. (sec.) (#1*60)	#3 Intensity (in./hr.)	#4 Q dev. (cfs) (A*C*#3)	#5 V in (cu. ft.)	#6 V out (cu. ft.) (Outf.*#2)	#7 Req. Storage (cu. ft.) (#5-#6)
10.00	600.00	4.69	13.84	11,131	413	10,718
5	300	6.77	19.82	7,967	206	7,761
10	600	4.69	13.73	11,039	413	10,626
15	900	3.64	10.66	11,764	619	11,145
20	1,200	3.16	9.26	13,002	826	12,176
25	1,500	2.69	7.87	13,402	1032	12,370
30	1,800	2.21	6.47	12,965	1239	11,726
35	2,100	2.06	6.04	13,906	1445	12,460
40	2,400	1.91	5.60	14,586	1652	12,934
45	2,700	1.77	5.17	15,005	1858	13,146
50	3,000	1.62	4.73	15,164	2065	13,099
55	3,300	1.47	4.30	15,062	2271	12,790
60	3,600	1.32	3.86	14,700	2478	12,222
65	3,900	1.27	3.72	15,258	2684	12,574
70	4,200	1.22	3.57	15,729	2891	12,838
75	4,500	1.17	3.43	16,112	3097	13,014
80	4,800	1.12	3.28	16,407	3304	13,103
85	5,100	1.07	3.13	16,614	3510	13,104
90	5,400	1.02	2.99	16,734	3717	13,017
95	5,700	0.97	2.84	16,765	3923	12,842
100	6,000	0.92	2.69	16,709	4130	12,579
105	6,300	0.87	2.55	16,565	4336	12,229
110	6,600	0.82	2.40	16,333	4543	11,790
115	6,900	0.77	2.25	16,013	4749	11,264
120	7,200	0.72	2.11	15,606	4956	10,650
180	10,800	0.50	1.46	16,075	7434	8,641
360	21,600	0.27	0.79	17,298	14868	2,431
720	43,200	0.15	0.44	19,314	29735	0
1440	86,400	0.09	0.25	21,804	59470	0

PROJECT:	**KN 24394 US20, Arco to Idaho Falls**				[Linked Data]
BASIN:	004-R				[User Input Data]
DESIGNER:	**BCC, DEA**	**REPORTS TO:**	**SW-6488-R**		[Calculated Data]
DATE:	**9/29/2025**				

Bio-Infiltration Swales

Lowpoint Swale (Priority 1):

Width (feet):	0
Length (feet):	0
Sideslope 1 (H:V):	0
Sideslope 2 (H:V):	0
Max Depth (feet):	0
Max Volume When Full (CF):	0
LP Swale Infiltration Area (SF):	0

Road Slope Swale (Priority 2):	**Roadside Slope A**	**Roadside Slope B**
Base Width (feet):	2	2
Sideslope 1: (_H:1V)	2	2
Sideslope 2: (_H:V)	4	4
Longitudinal Slope (ft/ft):	0.0073	0.0033
Determination of Max Usable Swale Length Due to Slope:		
Max Water Depth At Downstream End (feet):	*1.5*	*1.5*
Swale Volume (CF):	*771*	*1705*
Length (feet):	*205*	*455*
Determination of Length of Bermed Swales:		
Swale Length (feet):	200	300
Storage Depth at U/S End (feet):	0.04	0.51
Swale Volume (CF):	770	1586
Infiltration Area Per Bermed Swale (SF):	1324	2409
Number of Bermed Swales:	17	3
Total Swale Infiltration Area (SF):	22508	7227
Total Swale Volume (CF):	13095	4757
Available Length 1 (feet):	3597	1044
Proposed Length 2 (feet):	3400	900
Difference (feet):	197 **OK! (Design> Req'd**	144 **OK! (Design> Req'd)**

Total Design Storage (CF):	**17,852**
Total Infiltration Area (SF):	29,735
Swale Infiltration Rate (cfs):	0.688
Total Infiltration Rate (cfs):	0.688
Total Time to Drain (Hrs):	5.31

Required Treatment Volume:		
Basin Imp. Area x 0.5 inches /12 (CF)	4,255	**OK! (Design> Req'd)**
Required Storage Volume:		
Maximum Storage From Rational Column #7 (CF):	13,146	**OK! (Design> Req'd)**
Target Time to Drain:		
From Design Requirements (Hrs):	72	**OK! (Design<Req'd)**

PROJECT:	**KN 24394 US20, Arco to Idaho Falls**				**[Linked Data]**
BASIN:	005.1-R				**[User Input Data]**
DESIGNER:	**BCC, DEA**	**REPORTS TO:**	**SW-6534-R**		**[Calculated Data]**
DATE:	**9/29/2025**				

Basin Data

	SF	Acre	C
Impervious Area	31,496	0.723	0.9
Pervious Area	56,319	1.293	0.2
Total Area	87,815	2.016	

Composite "C"	0.45
Area * "C"	0.909

			Rational Method Peak Flows (Q=C*I*A)		
Time of Concentration:	10.00	min			
25-Year Intensity	3.61	in/hr	25-year Peak	3.31	cfs
50-Year Intensity	4.16	in/hr	50-year Peak	3.81	cfs
100-year Intensity:	4.69	in/hr	100-year Peak	4.30	cfs

Selected Design Storm:	100-Year
Design Infiltration Rate (in/hr):	1.00

PROJECT:	**KN 24394 US20, Arco to Idaho Falls**			
BASIN:	005.1-R			
DESIGNER:	**BCC, DEA**	**REPORTS TO:**	**SW-6534-R**	
DATE:	**9/29/2025**			

[Linked Data]
[User Input Data]
[Calculated Data]

MODIFIED RATIONAL METHOD (BOWSTRING) FOR REQUIRED DETENTION STORAGE

#1 Time Inc. (min.)	#2 Time Inc. (sec.) (#1*60)	#3 Intensity (in./hr.)	#4 Q dev. (cfs) (A*C*#3)	#5 V in (cu. ft.)	#6 V out (cu. ft.) (Outf.*#2)	#7 Req. Storage (cu. ft.) (#5-#6)
10.00	600.00	4.69	4.30	3,457	90	3,368
5	300	6.77	6.16	2,475	45	2,430
10	600	4.69	4.26	3,429	90	3,339
15	900	3.64	3.31	3,654	135	3,520
20	1,200	3.16	2.88	4,039	179	3,859
25	1,500	2.69	2.44	4,163	224	3,939
30	1,800	2.21	2.01	4,027	269	3,758
35	2,100	2.06	1.87	4,319	314	4,005
40	2,400	1.91	1.74	4,531	359	4,172
45	2,700	1.77	1.60	4,661	404	4,257
50	3,000	1.62	1.47	4,710	449	4,261
55	3,300	1.47	1.34	4,679	494	4,185
60	3,600	1.32	1.20	4,566	538	4,028
65	3,900	1.27	1.15	4,739	583	4,156
70	4,200	1.22	1.11	4,886	628	4,258
75	4,500	1.17	1.06	5,005	673	4,332
80	4,800	1.12	1.02	5,096	718	4,378
85	5,100	1.07	0.97	5,161	763	4,398
90	5,400	1.02	0.93	5,198	808	4,390
95	5,700	0.97	0.88	5,208	853	4,355
100	6,000	0.92	0.84	5,190	897	4,293
105	6,300	0.87	0.79	5,145	942	4,203
110	6,600	0.82	0.75	5,073	987	4,086
115	6,900	0.77	0.70	4,974	1032	3,942
120	7,200	0.72	0.65	4,847	1077	3,771
180	10,800	0.50	0.45	4,993	1615	3,378
360	21,600	0.27	0.25	5,373	3231	2,142
720	43,200	0.15	0.14	5,999	6461	0
1440	86,400	0.09	0.08	6,773	12923	0

PROJECT:	**KN 24394 US20, Arco to Idaho Falls**				[Linked Data]
BASIN:	005.1-R				[User Input Data]
DESIGNER:	**BCC, DEA**	**REPORTS TO:**	**SW-6534-R**		[Calculated Data]
DATE:	**9/29/2025**				

Bio-Infiltration Swales

Lowpoint Swale (Priority 1):

Width (feet):	0
Length (feet):	0
Sideslope 1 (H:V):	0
Sideslope 2 (H:V):	0
Max Depth (feet):	0
Max Volume When Full (CF):	0
LP Swale Infiltration Area (SF):	0

Road Slope Swale (Priority 2):	**Roadside Slope A**	**Roadside Slope B**
Base Width (feet):	2	2
Sideslope 1: (_H:1V)	2	2
Sideslope 2: (_H:V)	4	2
Longitudinal Slope (ft/ft):	0.0053	0.0012
Determination of Max Usable Swale Length Due to Slope:		
Max Water Depth At Downstream End (feet):	*1.5*	*1.5*
Swale Volume (CF):	*1061*	*3750*
Length (feet):	*283*	*1250*
Determination of Length of Bermed Swales:		
Swale Length (feet):	150	0
Storage Depth at U/S End (feet):	0.71	1.50
Swale Volume (CF):	901	0
Infiltration Area Per Bermed Swale (SF):	1292	0
Number of Bermed Swales:	5	0
Total Swale Infiltration Area (SF):	6461	0
Total Swale Volume (CF):	4507	0
Available Length 1 (feet):	889	516
Proposed Length 2 (feet):	750	0
Difference (feet):	139 **OK! (Design> Req'd**	516 **OK! (Design> Req'd)**

Total Design Storage (CF):	**4,507**
Total Infiltration Area (SF):	6,461
Swale Infiltration Rate (cfs):	0.150
Total Infiltration Rate (cfs):	0.150
Total Time to Drain (Hrs):	8.17
Required Treatment Volume:	
Basin Imp. Area x 0.5 inches /12 (CF)	1,312 **OK! (Design> Req'd)**
Required Storage Volume:	
Maximum Storage From Rational Column #7 (CF):	4,398 **OK! (Design> Req'd)**
Target Time to Drain:	
From Design Requirements (Hrs):	72 **OK! (Design<Req'd)**

PROJECT:	**KN 24394 US20, Arco to Idaho Falls**				**[Linked Data]**
BASIN:	005.2-R				**[User Input Data]**
DESIGNER:	**BCC, DEA**	**REPORTS TO:**	**SW-6577-R**		**[Calculated Data]**
DATE:	**9/29/2025**				

Basin Data

	SF	Acre	C
Impervious Area	63,652	1.461	0.9
Pervious Area	115,683	2.656	0.2
Total Area	179,335	4.117	

Composite "C"	0.45	
Area * "C"	1.846	

			Rational Method Peak Flows (Q=C*I*A)		
Time of Concentration:	10.00	min			
25-Year Intensity	3.61	in/hr	25-year Peak	6.72	cfs
50-Year Intensity	4.16	in/hr	50-year Peak	7.74	cfs
100-year Intensity:	4.69	in/hr	100-year Peak	8.73	cfs

Selected Design Storm:	100-Year
Design Infiltration Rate (in/hr):	1.00

PROJECT:	**KN 24394 US20, Arco to Idaho Falls**			
BASIN:	005.2-R			
DESIGNER:	**BCC, DEA**	**REPORTS TO:**	**SW-6577-R**	
DATE:	**9/29/2025**			

[Linked Data]
[User Input Data]
[Calculated Data]

MODIFIED RATIONAL METHOD (BOWSTRING) FOR REQUIRED DETENTION STORAGE

#1 Time Inc. (min.)	#2 Time Inc. (sec.) (#1*60)	#3 Intensity (in./hr.)	#4 Q dev. (cfs) (A*C*#3)	#5 V in (cu. ft.)	#6 V out (cu. ft.) (Outf.*#2)	#7 Req. Storage (cu. ft.) (#5-#6)
10.00	600.00	4.69	8.73	7,020	234	6,786
5	300	6.77	12.50	5,025	117	4,908
10	600	4.69	8.66	6,962	234	6,728
15	900	3.64	6.72	7,419	351	7,068
20	1,200	3.16	5.84	8,200	468	7,732
25	1,500	2.69	4.96	8,452	585	7,867
30	1,800	2.21	4.08	8,177	702	7,475
35	2,100	2.06	3.81	8,770	819	7,951
40	2,400	1.91	3.53	9,199	936	8,262
45	2,700	1.77	3.26	9,463	1054	8,410
50	3,000	1.62	2.98	9,563	1171	8,393
55	3,300	1.47	2.71	9,499	1288	8,212
60	3,600	1.32	2.44	9,271	1405	7,866
65	3,900	1.27	2.34	9,623	1522	8,101
70	4,200	1.22	2.25	9,920	1639	8,281
75	4,500	1.17	2.16	10,161	1756	8,405
80	4,800	1.12	2.07	10,347	1873	8,475
85	5,100	1.07	1.98	10,478	1990	8,488
90	5,400	1.02	1.88	10,553	2107	8,446
95	5,700	0.97	1.79	10,573	2224	8,349
100	6,000	0.92	1.70	10,538	2341	8,197
105	6,300	0.87	1.61	10,447	2458	7,989
110	6,600	0.82	1.51	10,301	2575	7,726
115	6,900	0.77	1.42	10,099	2692	7,407
120	7,200	0.72	1.33	9,842	2809	7,033
180	10,800	0.50	0.92	10,138	4214	5,924
360	21,600	0.27	0.50	10,909	8428	2,481
720	43,200	0.15	0.28	12,181	16856	0
1440	86,400	0.09	0.16	13,751	33712	0

PROJECT:	**KN 24394 US20, Arco to Idaho Falls**				[Linked Data]
BASIN:	005.2-R				[User Input Data]
DESIGNER:	**BCC, DEA**	**REPORTS TO:**	**SW-6577-R**		[Calculated Data]
DATE:	**9/29/2025**				

Bio-Infiltration Swales

Lowpoint Swale (Priority 1):

Width (feet):	0
Length (feet):	0
Sideslope 1 (H:V):	0
Sideslope 2 (H:V):	0
Max Depth (feet):	0
Max Volume When Full (CF):	0
LP Swale Infiltration Area (SF):	0

Road Slope Swale (Priority 2):	**Roadside Slope A**	**Roadside Slope B**
Base Width (feet):	2	2
Sideslope 1: (_H:1V)	2	2
Sideslope 2: (_H:V)	4	2
Longitudinal Slope (ft/ft):	0.0083	NA
Determination of Max Usable Swale Length Due to Slope:		
Max Water Depth At Downstream End (feet):	*1.5*	*1.5*
Swale Volume (CF):	*678*	*0*
Length (feet):	*181*	*0*
Determination of Length of Bermed Swales:		
Swale Length (feet):	200	0
Storage Depth at U/S End (feet):	-0.16	#VALUE!
Swale Volume (CF):	675	0
Infiltration Area Per Bermed Swale (SF):	1204	0
Number of Bermed Swales:	14	0
Total Swale Infiltration Area (SF):	16856	0
Total Swale Volume (CF):	9452	0
Available Length 1 (feet):	2893	0
Proposed Length 2 (feet):	2800	0
Difference (feet):	93	0

OK! (Design> Req'd

No Good (Design< Storage)

Total Design Storage (CF):	**9,452**
Total Infiltration Area (SF):	16,856
Swale Infiltration Rate (cfs):	0.390
Total Infiltration Rate (cfs):	0.390
Total Time to Drain (Hrs):	6.04

Required Treatment Volume:

Basin Imp. Area x 0.5 inches /12 (CF): 2,652 — OK! (Design> Req'd)

Required Storage Volume:

Maximum Storage From Rational Column #7 (CF): 8,488 — OK! (Design> Req'd)

Target Time to Drain:

From Design Requirements (Hrs): 72 — OK! (Design<Req'd)

PROJECT:	**KN 24394 US20, Arco to Idaho Falls**				**[Linked Data]**
BASIN:	005.3-R				**[User Input Data]**
DESIGNER:	**BCC, DEA**	**REPORTS TO:**	**#N/A**		**[Calculated Data]**
DATE:	**9/29/2025**				

Basin Data

	SF	Acre	C
Impervious Area	120,597	2.769	0.9
Pervious Area	303,456	6.966	0.2
Total Area	424,052	9.735	

Composite "C"	0.40	
Area * "C"	3.885	

			Rational Method Peak Flows (Q=C*I*A)		
Time of Concentration:	10.00	min			
25-Year Intensity	3.61	in/hr	25-year Peak	14.14	cfs
50-Year Intensity	4.16	in/hr	50-year Peak	16.30	cfs
100-year Intensity:	4.69	in/hr	100-year Peak	18.37	cfs

Selected Design Storm:	100-Year
Design Infiltration Rate (in/hr):	1.00

PROJECT:	**KN 24394 US20, Arco to Idaho Falls**				**[Linked Data]**
BASIN:	005.3-R				**[User Input Data]**
DESIGNER:	**BCC, DEA**	**REPORTS TO:**	**#N/A**		**[Calculated Data]**
DATE:	**9/29/2025**				

MODIFIED RATIONAL METHOD (BOWSTRING) FOR REQUIRED DETENTION STORAGE

#1 Time Inc. (min.)	#2 Time Inc. (sec.) (#1*60)	#3 Intensity (in./hr.)	#4 Q dev. (cfs) (A*C*#3)	#5 V in (cu. ft.)	#6 V out (cu. ft.) (Outf.*#2)	#7 Req. Storage (cu. ft.) (#5-#6)
10.00	600.00	4.69	18.37	14,771	451	14,320
5	300	6.77	26.30	10,573	226	10,347
10	600	4.69	18.22	14,649	451	14,198
15	900	3.64	14.14	15,612	677	14,935
20	1,200	3.16	12.29	17,254	903	16,351
25	1,500	2.69	10.44	17,786	1129	16,657
30	1,800	2.21	8.59	17,206	1354	15,852
35	2,100	2.06	8.01	18,454	1580	16,874
40	2,400	1.91	7.43	19,356	1806	17,550
45	2,700	1.77	6.86	19,913	2031	17,881
50	3,000	1.62	6.28	20,123	2257	17,866
55	3,300	1.47	5.70	19,988	2483	17,505
60	3,600	1.32	5.13	19,507	2709	16,799
65	3,900	1.27	4.93	20,249	2934	17,314
70	4,200	1.22	4.74	20,873	3160	17,713
75	4,500	1.17	4.55	21,381	3386	17,996
80	4,800	1.12	4.35	21,773	3611	18,162
85	5,100	1.07	4.16	22,048	3837	18,211
90	5,400	1.02	3.96	22,207	4063	18,144
95	5,700	0.97	3.77	22,249	4289	17,960
100	6,000	0.92	3.57	22,174	4514	17,660
105	6,300	0.87	3.38	21,983	4740	17,243
110	6,600	0.82	3.19	21,675	4966	16,709
115	6,900	0.77	2.99	21,251	5191	16,060
120	7,200	0.72	2.80	20,710	5417	15,293
180	10,800	0.50	1.94	21,332	8126	13,207
360	21,600	0.27	1.05	22,956	16251	6,704
720	43,200	0.15	0.59	25,631	32503	0
1440	86,400	0.09	0.33	28,935	65006	0

PROJECT:	**KN 24394 US20, Arco to Idaho Falls**				[Linked Data]
BASIN:	005.3-R				[User Input Data]
DESIGNER:	**BCC, DEA**	**REPORTS TO:**	**#N/A**		[Calculated Data]
DATE:	**9/29/2025**				

Bio-Infiltration Swales

Lowpoint Swale (Priority 1):

Width (feet):	0
Length (feet):	0
Sideslope 1 (H:V):	0
Sideslope 2 (H:V):	0
Max Depth (feet):	0
Max Volume When Full (CF):	0
LP Swale Infiltration Area (SF):	0

Road Slope Swale (Priority 2):	**Roadside Slope A**	**Roadside Slope B**
Base Width (feet):	2	2
Sideslope 1: (_H:1V)	2	2
Sideslope 2: (_H:V)	4	2
Longitudinal Slope (ft/ft):	0.0229	NA
Determination of Max Usable Swale Length Due to Slope:		
Max Water Depth At Downstream End (feet):	*1.5*	*1.5*
Swale Volume (CF):	*246*	*0*
Length (feet):	*66*	*0*
Determination of Length of Bermed Swales:		
Swale Length (feet):	70	0
Storage Depth at U/S End (feet):	-0.10	#VALUE!
Swale Volume (CF):	245	0
Infiltration Area Per Bermed Swale (SF):	433	0
Number of Bermed Swales:	75	0
Total Swale Infiltration Area (SF):	32503	0
Total Swale Volume (CF):	18391	0
Available Length 1 (feet):	5450	0
Proposed Length 2 (feet):	5250	0
Difference (feet):	200	0

OK! (Design> Req'd

No Good (Design< Storage)

Total Design Storage (CF):	**18,391**
Total Infiltration Area (SF):	32,503
Swale Infiltration Rate (cfs):	0.752
Total Infiltration Rate (cfs):	0.752
Total Time to Drain (Hrs):	6.72

Required Treatment Volume:

Basin Imp. Area x 0.5 inches /12 (CF) 5,025 OK! (Design> Req'd)

Required Storage Volume:

Maximum Storage From Rational Column #7 (CF): 18,211 OK! (Design> Req'd)

Target Time to Drain:

From Design Requirements (Hrs): 72 OK! (Design<Req'd)

PROJECT:	**KN 24394 US20, Arco to Idaho Falls**				**[Linked Data]**
BASIN:	005.4-R				**[User Input Data]**
DESIGNER:	**BCC, DEA**	**REPORTS TO:**	**#N/A**		**[Calculated Data]**
DATE:	**9/29/2025**				

Basin Data

	SF	Acre	C
Impervious Area	134,627	3.091	0.9
Pervious Area	294,288	6.756	0.2
Total Area	428,915	9.847	

Composite "C"	0.42	
Area * "C"	4.133	

			Rational Method Peak Flows (Q=C*I*A)		
Time of Concentration:	10.00	min			
25-Year Intensity	3.61	in/hr	25-year Peak	15.04	cfs
50-Year Intensity	4.16	in/hr	50-year Peak	17.34	cfs
100-year Intensity:	4.69	in/hr	100-year Peak	19.54	cfs

Selected Design Storm:	100-Year
Design Infiltration Rate (in/hr):	1.00

PROJECT:	**KN 24394 US20, Arco to Idaho Falls**			
BASIN:	005.4-R			
DESIGNER:	**BCC, DEA**	**REPORTS TO:**	**#N/A**	
DATE:	**9/29/2025**			

[Linked Data]
[User Input Data]
[Calculated Data]

MODIFIED RATIONAL METHOD (BOWSTRING) FOR REQUIRED DETENTION STORAGE

#1 Time Inc. (min.)	#2 Time Inc. (sec.) (#1*60)	#3 Intensity (in./hr.)	#4 Q dev. (cfs) (A*C*#3)	#5 V in (cu. ft.)	#6 V out (cu. ft.) (Outf.*#2)	#7 Req. Storage (cu. ft.) (#5-#6)
10.00	600.00	4.69	19.54	15,713	533	15,180
5	300	6.77	27.98	11,247	267	10,981
10	600	4.69	19.38	15,584	533	15,050
15	900	3.64	15.04	16,608	800	15,807
20	1,200	3.16	13.07	18,355	1067	17,288
25	1,500	2.69	11.10	18,920	1334	17,586
30	1,800	2.21	9.13	18,303	1600	16,703
35	2,100	2.06	8.52	19,631	1867	17,764
40	2,400	1.91	7.91	20,591	2134	18,457
45	2,700	1.77	7.29	21,183	2400	18,782
50	3,000	1.62	6.68	21,407	2667	18,740
55	3,300	1.47	6.07	21,263	2934	18,329
60	3,600	1.32	5.46	20,752	3201	17,551
65	3,900	1.27	5.25	21,540	3467	18,073
70	4,200	1.22	5.04	22,205	3734	18,471
75	4,500	1.17	4.84	22,745	4001	18,744
80	4,800	1.12	4.63	23,162	4268	18,894
85	5,100	1.07	4.42	23,454	4534	18,920
90	5,400	1.02	4.22	23,623	4801	18,822
95	5,700	0.97	4.01	23,668	5068	18,600
100	6,000	0.92	3.80	23,588	5334	18,254
105	6,300	0.87	3.60	23,385	5601	17,784
110	6,600	0.82	3.39	23,058	5868	17,190
115	6,900	0.77	3.18	22,606	6135	16,472
120	7,200	0.72	2.98	22,031	6401	15,630
180	10,800	0.50	2.06	22,693	9602	13,091
360	21,600	0.27	1.12	24,420	19204	5,216
720	43,200	0.15	0.63	27,265	38408	0
1440	86,400	0.09	0.36	30,780	76816	0

PROJECT:	**KN 24394 US20, Arco to Idaho Falls**				[Linked Data]
BASIN:	005.4-R				[User Input Data]
DESIGNER:	**BCC, DEA**	**REPORTS TO:**	**#N/A**		[Calculated Data]
DATE:	**9/29/2025**				

Bio-Infiltration Swales

Lowpoint Swale (Priority 1):

Width (feet):	0
Length (feet):	0
Sideslope 1 (H:V):	0
Sideslope 2 (H:V):	0
Max Depth (feet):	0
Max Volume When Full (CF):	0
LP Swale Infiltration Area (SF):	0

Road Slope Swale (Priority 2):	**Roadside Slope A**	**Roadside Slope B**
Base Width (feet):	2	2
Sideslope 1: (_H:1V)	2	2
Sideslope 2: (_H:V)	4	2
Longitudinal Slope (ft/ft):	0.0119	NA
Determination of Max Usable Swale Length Due to Slope:		
Max Water Depth At Downstream End (feet):	*1.5*	*1.5*
Swale Volume (CF):	*473*	*0*
Length (feet):	*126*	*0*
Determination of Length of Bermed Swales:		
Swale Length (feet):	125	0
Storage Depth at U/S End (feet):	0.01	#VALUE!
Swale Volume (CF):	473	0
Infiltration Area Per Bermed Swale (SF):	817	0
Number of Bermed Swales:	47	0
Total Swale Infiltration Area (SF):	38408	0
Total Swale Volume (CF):	22216	0
Available Length 1 (feet):	6000	0
Proposed Length 2 (feet):	5875	0
Difference (feet):	125	0

OK! (Design> Req'd

No Good (Design< Storage)

Total Design Storage (CF):	**22,216**
Total Infiltration Area (SF):	38,408
Swale Infiltration Rate (cfs):	0.889
Total Infiltration Rate (cfs):	0.889
Total Time to Drain (Hrs):	5.91

Required Treatment Volume:

Basin Imp. Area x 0.5 inches /12 (CF): 5,609 — OK! (Design> Req'd)

Required Storage Volume:

Maximum Storage From Rational Column #7 (CF): 18,920 — OK! (Design> Req'd)

Target Time to Drain:

From Design Requirements (Hrs): 72 — OK! (Design<Req'd)

PROJECT:	**KN 24394 US20, Arco to Idaho Falls**				**[Linked Data]**
BASIN:	006-R				**[User Input Data]**
DESIGNER:	**BCC, DEA**	**REPORTS TO:**	**SW-6690-R**		**[Calculated Data]**
DATE:	**9/29/2025**				

Basin Data

	SF	Acre	C
Impervious Area	81,011	1.860	0.9
Pervious Area	145,239	3.334	0.2
Total Area	226,249	5.194	

Composite "C"	0.45	
Area * "C"	2.341	

			Rational Method Peak Flows (Q=C*I*A)		
Time of Concentration:	10.00	min			
25-Year Intensity	3.61	in/hr	25-year Peak	8.52	cfs
50-Year Intensity	4.16	in/hr	50-year Peak	9.82	cfs
100-year Intensity:	4.69	in/hr	100-year Peak	11.07	cfs

Selected Design Storm:	100-Year
Design Infiltration Rate (in/hr):	1.00

PROJECT:	**KN 24394 US20, Arco to Idaho Falls**			
BASIN:	006-R			
DESIGNER:	**BCC, DEA**	**REPORTS TO:**	**SW-6690-R**	
DATE:	**9/29/2025**			

[Linked Data]
[User Input Data]
[Calculated Data]

MODIFIED RATIONAL METHOD (BOWSTRING) FOR REQUIRED DETENTION STORAGE

#1 Time Inc. (min.)	#2 Time Inc. (sec.) (#1*60)	#3 Intensity (in./hr.)	#4 Q dev. (cfs) (A*C*#3)	#5 V in (cu. ft.)	#6 V out (cu. ft.) (Outf.*#2)	#7 Req. Storage (cu. ft.) (#5-#6)
10.00	600.00	4.69	11.07	8,899	261	8,638
5	300	6.77	15.85	6,370	131	6,239
10	600	4.69	10.98	8,826	261	8,565
15	900	3.64	8.52	9,406	392	9,014
20	1,200	3.16	7.40	10,395	523	9,873
25	1,500	2.69	6.29	10,716	653	10,062
30	1,800	2.21	5.17	10,366	784	9,582
35	2,100	2.06	4.83	11,118	915	10,203
40	2,400	1.91	4.48	11,662	1046	10,616
45	2,700	1.77	4.13	11,997	1176	10,821
50	3,000	1.62	3.78	12,124	1307	10,817
55	3,300	1.47	3.44	12,043	1438	10,605
60	3,600	1.32	3.09	11,753	1568	10,185
65	3,900	1.27	2.97	12,199	1699	10,500
70	4,200	1.22	2.86	12,576	1830	10,746
75	4,500	1.17	2.74	12,882	1960	10,922
80	4,800	1.12	2.62	13,118	2091	11,027
85	5,100	1.07	2.50	13,284	2222	11,062
90	5,400	1.02	2.39	13,379	2353	11,027
95	5,700	0.97	2.27	13,404	2483	10,921
100	6,000	0.92	2.15	13,359	2614	10,746
105	6,300	0.87	2.04	13,244	2745	10,500
110	6,600	0.82	1.92	13,059	2875	10,184
115	6,900	0.77	1.80	12,803	3006	9,797
120	7,200	0.72	1.69	12,478	3137	9,341
180	10,800	0.50	1.17	12,852	4705	8,147
360	21,600	0.27	0.63	13,830	9410	4,420
720	43,200	0.15	0.36	15,442	18820	0
1440	86,400	0.09	0.20	17,433	37640	0

PROJECT:	**KN 24394 US20, Arco to Idaho Falls**				[Linked Data]
BASIN:	006-R				[User Input Data]
DESIGNER:	**BCC, DEA**	**REPORTS TO:**	**SW-6690-R**		[Calculated Data]
DATE:	**9/29/2025**				

Bio-Infiltration Swales

Lowpoint Swale (Priority 1):

Width (feet):	0
Length (feet):	0
Sideslope 1 (H:V):	0
Sideslope 2 (H:V):	0
Max Depth (feet):	0
Max Volume When Full (CF):	0
LP Swale Infiltration Area (SF):	0

Road Slope Swale (Priority 2):	**Roadside Slope A**	**Roadside Slope B**
Base Width (feet):	2	2
Sideslope 1: (_H:1V)	2	2
Sideslope 2: (_H:V)	2	4
Longitudinal Slope (ft/ft):	0.0080	0.0036
Determination of Max Usable Swale Length Due to Slope:		
Max Water Depth At Downstream End (feet):	*1.5*	*1.5*
Swale Volume (CF):	*563*	*1563*
Length (feet):	*188*	*417*
Determination of Length of Bermed Swales:		
Swale Length (feet):	175	400
Storage Depth at U/S End (feet):	0.10	0.06
Swale Volume (CF):	561	1561
Infiltration Area Per Bermed Swale (SF):	910	2672
Number of Bermed Swales:	6	5
Total Swale Infiltration Area (SF):	5460	13360
Total Swale Volume (CF):	3367	7807
Available Length 1 (feet):	1314	2339
Proposed Length 2 (feet):	1050	2000
Difference (feet):	264 **OK! (Design> Req'd**	339 **OK! (Design> Req'd)**

Total Design Storage (CF):	**11,174**
Total Infiltration Area (SF):	18,820
Swale Infiltration Rate (cfs):	0.436
Total Infiltration Rate (cfs):	0.436
Total Time to Drain (Hrs):	7.05
Required Treatment Volume:	
Basin Imp. Area x 0.5 inches /12 (CF)	3,375 **OK! (Design> Req'd)**
Required Storage Volume:	
Maximum Storage From Rational Column #7 (CF):	11,062 **OK! (Design> Req'd)**
Target Time to Drain:	
From Design Requirements (Hrs):	72 **OK! (Design<Req'd)**

PROJECT:	**KN 24394 US20, Arco to Idaho Falls**				**[Linked Data]**
BASIN:	007-R				**[User Input Data]**
DESIGNER:	**BCC, DEA**	**REPORTS TO:**	**SW-6728-R**		**[Calculated Data]**
DATE:	**9/29/2025**				

Basin Data

	SF	Acre	C
Impervious Area	142,481	3.271	0.9
Pervious Area	283,681	6.512	0.2
Total Area	426,162	9.783	

Composite "C"	0.43	
Area * "C"	4.246	

			Rational Method Peak Flows (Q=C*I*A)		
Time of Concentration:	10.00	min			
25-Year Intensity	3.61	in/hr	25-year Peak	15.46	cfs
50-Year Intensity	4.16	in/hr	50-year Peak	17.81	cfs
100-year Intensity:	4.69	in/hr	100-year Peak	20.08	cfs

Selected Design Storm:	100-Year
Design Infiltration Rate (in/hr):	1.00

PROJECT:	**KN 24394 US20, Arco to Idaho Falls**			
BASIN:	007-R			
DESIGNER:	**BCC, DEA**	**REPORTS TO:**	**SW-6728-R**	
DATE:	**9/29/2025**			

[Linked Data]
[User Input Data]
[Calculated Data]

MODIFIED RATIONAL METHOD (BOWSTRING) FOR REQUIRED DETENTION STORAGE

#1 Time Inc. (min.)	#2 Time Inc. (sec.) (#1*60)	#3 Intensity (in./hr.)	#4 Q dev. (cfs) (A*C*#3)	#5 V in (cu. ft.)	#6 V out (cu. ft.) (Outf.*#2)	#7 Req. Storage (cu. ft.) (#5-#6)
10.00	600.00	4.69	20.08	16,145	464	15,681
5	300	6.77	28.75	11,556	232	11,324
10	600	4.69	19.92	16,012	464	15,547
15	900	3.64	15.46	17,064	697	16,367
20	1,200	3.16	13.43	18,859	929	17,930
25	1,500	2.69	11.41	19,440	1161	18,279
30	1,800	2.21	9.38	18,806	1393	17,413
35	2,100	2.06	8.75	20,170	1626	18,545
40	2,400	1.91	8.12	21,156	1858	19,299
45	2,700	1.77	7.49	21,765	2090	19,675
50	3,000	1.62	6.86	21,995	2322	19,673
55	3,300	1.47	6.23	21,847	2554	19,293
60	3,600	1.32	5.61	21,322	2787	18,535
65	3,900	1.27	5.39	22,132	3019	19,113
70	4,200	1.22	5.18	22,815	3251	19,564
75	4,500	1.17	4.97	23,370	3483	19,887
80	4,800	1.12	4.76	23,798	3716	20,083
85	5,100	1.07	4.54	24,099	3948	20,151
90	5,400	1.02	4.33	24,272	4180	20,092
95	5,700	0.97	4.12	24,318	4412	19,906
100	6,000	0.92	3.91	24,237	4645	19,592
105	6,300	0.87	3.69	24,028	4877	19,151
110	6,600	0.82	3.48	23,691	5109	18,582
115	6,900	0.77	3.27	23,228	5341	17,886
120	7,200	0.72	3.06	22,637	5573	17,063
180	10,800	0.50	2.12	23,316	8360	14,956
360	21,600	0.27	1.15	25,091	16720	8,371
720	43,200	0.15	0.65	28,015	33441	0
1440	86,400	0.09	0.37	31,626	66881	0

PROJECT:	**KN 24394 US20, Arco to Idaho Falls**				[Linked Data]
BASIN:	007-R				[User Input Data]
DESIGNER:	**BCC, DEA**	**REPORTS TO:**	**SW-6728-R**		[Calculated Data]
DATE:	**9/29/2025**				

Bio-Infiltration Swales

Lowpoint Swale (Priority 1):

Width (feet):	0
Length (feet):	0
Sideslope 1 (H:V):	0
Sideslope 2 (H:V):	0
Max Depth (feet):	0
Max Volume When Full (CF):	0
LP Swale Infiltration Area (SF):	0

Road Slope Swale (Priority 2):	**Roadside Slope A**	**Roadside Slope B**
Base Width (feet):	2	2
Sideslope 1: (_H:1V)	2	2
Sideslope 2: (_H:V)	4	2
Longitudinal Slope (ft/ft):	0.0090	0.0109
Determination of Max Usable Swale Length Due to Slope:		
Max Water Depth At Downstream End (feet):	*1.5*	*1.5*
Swale Volume (CF):	*625*	*413*
Length (feet):	*167*	*138*
Determination of Length of Bermed Swales:		
Swale Length (feet):	150	125
Storage Depth at U/S End (feet):	0.15	0.14
Swale Volume (CF):	622	411
Infiltration Area Per Bermed Swale (SF):	1043	659
Number of Bermed Swales:	15	27
Total Swale Infiltration Area (SF):	15638	17803
Total Swale Volume (CF):	9332	11096
Available Length 1 (feet):	2355	3577
Proposed Length 2 (feet):	2250	3375
Difference (feet):	105 **OK! (Design> Req'd**	202 **OK! (Design> Req'd)**

Total Design Storage (CF):	**20,428**
Total Infiltration Area (SF):	33,441
Swale Infiltration Rate (cfs):	0.774
Total Infiltration Rate (cfs):	0.774
Total Time to Drain (Hrs):	7.23
Required Treatment Volume:	
Basin Imp. Area x 0.5 inches /12 (CF)	5,937 **OK! (Design> Req'd)**
Required Storage Volume:	
Maximum Storage From Rational Column #7 (CF):	20,151 **OK! (Design> Req'd)**
Target Time to Drain:	
From Design Requirements (Hrs):	72 **OK! (Design<Req'd)**

PROJECT:	**KN 24394 US20, Arco to Idaho Falls**				**[Linked Data]**
BASIN:	008-R				**[User Input Data]**
DESIGNER:	**BCC, DEA**	**REPORTS TO:**	**SW-6787-R**		**[Calculated Data]**
DATE:	**9/29/2025**				

Basin Data

	SF	Acre	C
Impervious Area	129,967	2.984	0.9
Pervious Area	165,970	3.810	0.2
Total Area	295,938	6.794	

Composite "C"	0.51	
Area * "C"	3.447	

			Rational Method Peak Flows (Q=C*I*A)		
Time of Concentration:	10.00	min			
25-Year Intensity	3.61	in/hr	25-year Peak	12.55	cfs
50-Year Intensity	4.16	in/hr	50-year Peak	14.46	cfs
100-year Intensity:	4.69	in/hr	100-year Peak	16.30	cfs

Selected Design Storm:	100-Year
Design Infiltration Rate (in/hr):	1.00

PROJECT:	**KN 24394 US20, Arco to Idaho Falls**			
BASIN:	008-R			
DESIGNER:	**BCC, DEA**	**REPORTS TO:**	**SW-6787-R**	
DATE:	**9/29/2025**			

[Linked Data]
[User Input Data]
[Calculated Data]

MODIFIED RATIONAL METHOD (BOWSTRING) FOR REQUIRED DETENTION STORAGE

#1 Time Inc. (min.)	#2 Time Inc. (sec.) (#1*60)	#3 Intensity (in./hr.)	#4 Q dev. (cfs) (A*C*#3)	#5 V in (cu. ft.)	#6 V out (cu. ft.) (Outf.*#2)	#7 Req. Storage (cu. ft.) (#5-#6)
10.00	600.00	4.69	16.30	13,107	353	12,754
5	300	6.77	23.34	9,382	177	9,205
10	600	4.69	16.17	12,999	353	12,646
15	900	3.64	12.55	13,853	530	13,324
20	1,200	3.16	10.90	15,311	706	14,604
25	1,500	2.69	9.26	15,782	883	14,899
30	1,800	2.21	7.62	15,268	1059	14,208
35	2,100	2.06	7.11	16,375	1236	15,139
40	2,400	1.91	6.60	17,176	1412	15,763
45	2,700	1.77	6.08	17,669	1589	16,081
50	3,000	1.62	5.57	17,856	1765	16,091
55	3,300	1.47	5.06	17,737	1942	15,795
60	3,600	1.32	4.55	17,310	2118	15,191
65	3,900	1.27	4.38	17,968	2295	15,673
70	4,200	1.22	4.21	18,522	2471	16,050
75	4,500	1.17	4.03	18,973	2648	16,325
80	4,800	1.12	3.86	19,320	2825	16,496
85	5,100	1.07	3.69	19,564	3001	16,563
90	5,400	1.02	3.52	19,705	3178	16,527
95	5,700	0.97	3.34	19,742	3354	16,388
100	6,000	0.92	3.17	19,676	3531	16,145
105	6,300	0.87	3.00	19,507	3707	15,799
110	6,600	0.82	2.83	19,234	3884	15,350
115	6,900	0.77	2.65	18,857	4060	14,797
120	7,200	0.72	2.48	18,377	4237	14,140
180	10,800	0.50	1.72	18,929	6355	12,574
360	21,600	0.27	0.93	20,370	12711	7,659
720	43,200	0.15	0.52	22,743	25421	0
1440	86,400	0.09	0.30	25,675	50842	0

PROJECT:	**KN 24394 US20, Arco to Idaho Falls**				[Linked Data]
BASIN:	008-R				[User Input Data]
DESIGNER:	**BCC, DEA**	**REPORTS TO:**	**SW-6787-R**		[Calculated Data]
DATE:	**9/29/2025**				

Bio-Infiltration Swales

Lowpoint Swale (Priority 1):

Width (feet):	0
Length (feet):	0
Sideslope 1 (H:V):	0
Sideslope 2 (H:V):	0
Max Depth (feet):	0
Max Volume When Full (CF):	0
LP Swale Infiltration Area (SF):	0

Road Slope Swale (Priority 2):	**Roadside Slope A**	**Roadside Slope B**
Base Width (feet):	2	2
Sideslope 1: (_H:1V)	2	2
Sideslope 2: (_H:V)	4	4
Longitudinal Slope (ft/ft):	0.0036	0.0025
Determination of Max Usable Swale Length Due to Slope:		
Max Water Depth At Downstream End (feet):	*1.5*	*1.5*
Swale Volume (CF):	*1563*	*2250*
Length (feet):	*417*	*600*
Determination of Length of Bermed Swales:		
Swale Length (feet):	300	250
Storage Depth at U/S End (feet):	0.42	0.88
Swale Volume (CF):	1493	1676
Infiltration Area Per Bermed Swale (SF):	2328	2281
Number of Bermed Swales:	7	4
Total Swale Infiltration Area (SF):	16296	9125
Total Swale Volume (CF):	10450	6703
Available Length 1 (feet):	2374	1148
Proposed Length 2 (feet):	2100	1000
Difference (feet):	274 **OK! (Design> Req'd**	148 **OK! (Design> Req'd)**

Total Design Storage (CF):	**17,154**
Total Infiltration Area (SF):	25,421
Swale Infiltration Rate (cfs):	0.588
Total Infiltration Rate (cfs):	0.588
Total Time to Drain (Hrs):	7.82
Required Treatment Volume:	
Basin Imp. Area x 0.5 inches /12 (CF)	5,415 **OK! (Design> Req'd)**
Required Storage Volume:	
Maximum Storage From Rational Column #7 (CF):	16,563 **OK! (Design> Req'd)**
Target Time to Drain:	
From Design Requirements (Hrs):	72 **OK! (Design<Req'd)**

PROJECT:	**KN 24394 US20, Arco to Idaho Falls**				**[Linked Data]**
BASIN:	009-R				**[User Input Data]**
DESIGNER:	**BCC, DEA**	**REPORTS TO:**	**SW-6823-R**		**[Calculated Data]**
DATE:	**9/29/2025**				

Basin Data

	SF	Acre	C
Impervious Area	99,762	2.290	0.9
Pervious Area	179,099	4.112	0.2
Total Area	278,861	6.402	

Composite "C"	0.45	
Area * "C"	2.884	

			Rational Method Peak Flows (Q=C*I*A)		
Time of Concentration:	10.00	min			
25-Year Intensity	3.61	in/hr	25-year Peak	10.50	cfs
50-Year Intensity	4.16	in/hr	50-year Peak	12.10	cfs
100-year Intensity:	4.69	in/hr	100-year Peak	13.64	cfs

Selected Design Storm:	100-Year
Design Infiltration Rate (in/hr):	1.00

PROJECT:	**KN 24394 US20, Arco to Idaho Falls**			
BASIN:	009-R			
DESIGNER:	**BCC, DEA**	**REPORTS TO:**	**SW-6823-R**	
DATE:	**9/29/2025**			

[Linked Data]
[User Input Data]
[Calculated Data]

MODIFIED RATIONAL METHOD (BOWSTRING) FOR REQUIRED DETENTION STORAGE

#1 Time Inc. (min.)	#2 Time Inc. (sec.) (#1*60)	#3 Intensity (in./hr.)	#4 Q dev. (cfs) (A*C*#3)	#5 V in (cu. ft.)	#6 V out (cu. ft.) (Outf.*#2)	#7 Req. Storage (cu. ft.) (#5-#6)
10.00	600.00	4.69	13.64	10,964	312	10,652
5	300	6.77	19.52	7,848	156	7,692
10	600	4.69	13.52	10,873	312	10,561
15	900	3.64	10.50	11,588	468	11,120
20	1,200	3.16	9.12	12,807	624	12,183
25	1,500	2.69	7.75	13,201	780	12,421
30	1,800	2.21	6.37	12,771	936	11,835
35	2,100	2.06	5.94	13,697	1092	12,605
40	2,400	1.91	5.52	14,367	1248	13,118
45	2,700	1.77	5.09	14,780	1404	13,375
50	3,000	1.62	4.66	14,936	1560	13,376
55	3,300	1.47	4.23	14,836	1716	13,120
60	3,600	1.32	3.81	14,479	1872	12,607
65	3,900	1.27	3.66	15,029	2028	13,001
70	4,200	1.22	3.52	15,493	2184	13,309
75	4,500	1.17	3.37	15,870	2340	13,530
80	4,800	1.12	3.23	16,161	2496	13,664
85	5,100	1.07	3.09	16,365	2652	13,713
90	5,400	1.02	2.94	16,482	2808	13,674
95	5,700	0.97	2.80	16,513	2964	13,549
100	6,000	0.92	2.65	16,458	3120	13,338
105	6,300	0.87	2.51	16,316	3276	13,040
110	6,600	0.82	2.36	16,088	3432	12,656
115	6,900	0.77	2.22	15,773	3588	12,185
120	7,200	0.72	2.08	15,372	3744	11,627
180	10,800	0.50	1.44	15,833	5616	10,217
360	21,600	0.27	0.78	17,038	11233	5,806
720	43,200	0.15	0.44	19,024	22466	0
1440	86,400	0.09	0.25	21,476	44931	0

PROJECT:	**KN 24394 US20, Arco to Idaho Falls**				[Linked Data]
BASIN:	009-R				[User Input Data]
DESIGNER:	**BCC, DEA**	**REPORTS TO:**	**SW-6823-R**		[Calculated Data]
DATE:	**9/29/2025**				

Bio-Infiltration Swales

Lowpoint Swale (Priority 1):

Width (feet):	0
Length (feet):	0
Sideslope 1 (H:V):	0
Sideslope 2 (H:V):	0
Max Depth (feet):	0
Max Volume When Full (CF):	0
LP Swale Infiltration Area (SF):	0

Road Slope Swale (Priority 2):	**Roadside Slope A**	**Roadside Slope B**
Base Width (feet):	2	2
Sideslope 1: (_H:1V)	2	2
Sideslope 2: (_H:V)	2	2
Longitudinal Slope (ft/ft):	0.0094	0.0057
Determination of Max Usable Swale Length Due to Slope:		
Max Water Depth At Downstream End (feet):	*1.5*	*1.5*
Swale Volume (CF):	*479*	*789*
Length (feet):	*160*	*263*
Determination of Length of Bermed Swales:		
Swale Length (feet):	150	250
Storage Depth at U/S End (feet):	0.09	0.08
Swale Volume (CF):	478	788
Infiltration Area Per Bermed Swale (SF):	777	1288
Number of Bermed Swales:	14	9
Total Swale Infiltration Area (SF):	10878	11588
Total Swale Volume (CF):	6689	7096
Available Length 1 (feet):	2180	2321
Proposed Length 2 (feet):	2100	2250
Difference (feet):	80 **OK! (Design> Req'd**	71 **OK! (Design> Req'd)**

Total Design Storage (CF):	**13,785**
Total Infiltration Area (SF):	22,466
Swale Infiltration Rate (cfs):	0.520
Total Infiltration Rate (cfs):	0.520
Total Time to Drain (Hrs):	7.32
Required Treatment Volume:	
Basin Imp. Area x 0.5 inches /12 (CF)	4,157 **OK! (Design> Req'd)**
Required Storage Volume:	
Maximum Storage From Rational Column #7 (CF):	13,713 **OK! (Design> Req'd)**
Target Time to Drain:	
From Design Requirements (Hrs):	72 **OK! (Design<Req'd)**

PROJECT:	**KN 24394 US20, Arco to Idaho Falls**				**[Linked Data]**
BASIN:	010-R				**[User Input Data]**
DESIGNER:	**BCC, DEA**	**REPORTS TO:**	**SW-6868-R**		**[Calculated Data]**
DATE:	**9/29/2025**				

Basin Data

	SF	Acre	C
Impervious Area	80,358	1.845	0.9
Pervious Area	358,862	8.238	0.2
Total Area	439,220	10.083	

Composite "C"	0.33	
Area * "C"	3.308	

Time of Concentration:	10.00	min	**Rational Method Peak Flows (Q=C*I*A)**		
25-Year Intensity	3.61	in/hr	25-year Peak	12.04	cfs
50-Year Intensity	4.16	in/hr	50-year Peak	13.88	cfs
100-year Intensity:	4.69	in/hr	100-year Peak	15.64	cfs

Selected Design Storm: 100-Year

Design Infiltration Rate (in/hr): 1.00

Drywells:	**Number**	**Ouflow**			
Single (type A)	0	0.00	cfs	0.50	cfs per Single Drywell
Double (type B)	0	0.00	cfs	1.00	cfs per Double Drywell

PROJECT:	**KN 24394 US20, Arco to Idaho Falls**			
BASIN:	010-R			
DESIGNER:	**BCC, DEA**	**REPORTS TO:**	**SW-6868-R**	
DATE:	**9/29/2025**			

[Linked Data]
[User Input Data]
[Calculated Data]

MODIFIED RATIONAL METHOD (BOWSTRING) FOR REQUIRED DETENTION STORAGE

#1 Time Inc. (min.)	#2 Time Inc. (sec.) (#1*60)	#3 Intensity (in./hr.)	#4 Q dev. (cfs) (A*C*#3)	#5 V in (cu. ft.)	#6 V out (cu. ft.) (Outf.*#2)	#7 Req. Storage (cu. ft.) (#5-#6)
10.00	600.00	4.69	15.64	12,577	362	12,215
5	300	6.77	22.39	9,003	181	8,822
10	600	4.69	15.51	12,474	362	12,111
15	900	3.64	12.04	13,293	543	12,750
20	1,200	3.16	10.46	14,692	725	13,967
25	1,500	2.69	8.89	15,144	906	14,238
30	1,800	2.21	7.31	14,650	1087	13,564
35	2,100	2.06	6.82	15,713	1268	14,445
40	2,400	1.91	6.33	16,481	1449	15,032
45	2,700	1.77	5.84	16,955	1630	15,325
50	3,000	1.62	5.35	17,135	1811	15,323
55	3,300	1.47	4.86	17,020	1993	15,027
60	3,600	1.32	4.37	16,610	2174	14,436
65	3,900	1.27	4.20	17,241	2355	14,887
70	4,200	1.22	4.04	17,773	2536	15,237
75	4,500	1.17	3.87	18,206	2717	15,489
80	4,800	1.12	3.70	18,539	2898	15,641
85	5,100	1.07	3.54	18,774	3079	15,694
90	5,400	1.02	3.37	18,909	3261	15,648
95	5,700	0.97	3.21	18,944	3442	15,503
100	6,000	0.92	3.04	18,881	3623	15,258
105	6,300	0.87	2.88	18,718	3804	14,914
110	6,600	0.82	2.71	18,456	3985	14,471
115	6,900	0.77	2.55	18,095	4166	13,929
120	7,200	0.72	2.38	17,634	4347	13,287
180	10,800	0.50	1.65	18,164	6521	11,643
360	21,600	0.27	0.90	19,546	13042	6,504
720	43,200	0.15	0.50	21,824	26084	0
1440	86,400	0.09	0.28	24,637	52169	0

PROJECT:	**KN 24394 US20, Arco to Idaho Falls**				[Linked Data]
BASIN:	010-R				[User Input Data]
DESIGNER:	**BCC, DEA**	**REPORTS TO:**	**SW-6868-R**		[Calculated Data]
DATE:	**9/29/2025**				

Bio-Infiltration Swales

Lowpoint Swale (Priority 1):

Width (feet):	0
Length (feet):	0
Sideslope 1 (H:V):	0
Sideslope 2 (H:V):	0
Max Depth (feet):	0
Max Volume When Full (CF):	0
LP Swale Infiltration Area (SF):	0

Road Slope Swale (Priority 2):	**Roadside Slope A**	**Roadside Slope B**
Base Width (feet):	2	2
Sideslope 1: (_H:1V)	2	2
Sideslope 2: (_H:V)	2	2
Longitudinal Slope (ft/ft):	0.0199	0.0062
Determination of Max Usable Swale Length Due to Slope:		
Max Water Depth At Downstream End (feet):	*1.5*	*1.5*
Swale Volume (CF):	*226*	*726*
Length (feet):	*75*	*242*
Determination of Length of Bermed Swales:		
Swale Length (feet):	75	225
Storage Depth at U/S End (feet):	0.01	0.11
Swale Volume (CF):	226	724
Infiltration Area Per Bermed Swale (SF):	376	1172
Number of Bermed Swales:	60	3
Total Swale Infiltration Area (SF):	22568	3517
Total Swale Volume (CF):	13568	2172
Available Length 1 (feet):	5706	1087
Proposed Length 2 (feet):	4500	675
Difference (feet):	1206 **OK! (Design> Req'd**	412 **OK! (Design> Req'd)**

Total Design Storage (CF):	**15,739**
Total Infiltration Area (SF):	26,084
Swale Infiltration Rate (cfs):	0.604
Total Infiltration Rate (cfs):	0.604
Total Time to Drain (Hrs):	7.22
Required Treatment Volume:	
Basin Imp. Area x 0.5 inches /12 (CF)	3,348 **OK! (Design> Req'd)**
Required Storage Volume:	
Maximum Storage From Rational Column #7 (CF):	15,694 **OK! (Design> Req'd)**
Target Time to Drain:	
From Design Requirements (Hrs):	72 **OK! (Design<Req'd)**

PROJECT:	**KN 24394 US20, Arco to Idaho Falls**				**[Linked Data]**
BASIN:	011-R				**[User Input Data]**
DESIGNER:	**BCC, DEA**	**REPORTS TO:**	**SW-6945-R**		**[Calculated Data]**
DATE:	**9/29/2025**				

Basin Data

	SF	Acre	C
Impervious Area	0	0.000	0.9
Pervious Area	88,205	2.025	0.2
Total Area	88,205	2.025	

Composite "C"	0.20	
Area * "C"	0.405	

			Rational Method Peak Flows (Q=C*I*A)		
Time of Concentration:	10.00	min			
25-Year Intensity	3.61	in/hr	25-year Peak	1.47	cfs
50-Year Intensity	4.16	in/hr	50-year Peak	1.70	cfs
100-year Intensity:	4.69	in/hr	100-year Peak	1.92	cfs

Selected Design Storm:	100-Year
Design Infiltration Rate (in/hr):	1.00

PROJECT:	**KN 24394 US20, Arco to Idaho Falls**			
BASIN:	011-R			
DESIGNER:	**BCC, DEA**	**REPORTS TO:**	**SW-6945-R**	
DATE:	**9/29/2025**			

[Linked Data]
[User Input Data]
[Calculated Data]

MODIFIED RATIONAL METHOD (BOWSTRING) FOR REQUIRED DETENTION STORAGE

#1 Time Inc. (min.)	#2 Time Inc. (sec.) (#1*60)	#3 Intensity (in./hr.)	#4 Q dev. (cfs) (A*C*#3)	#5 V in (cu. ft.)	#6 V out (cu. ft.) (Outf.*#2)	#7 Req. Storage (cu. ft.) (#5-#6)
10.00	600.00	4.69	1.92	1,540	98	1,442
5	300	6.77	2.74	1,102	49	1,053
10	600	4.69	1.90	1,527	98	1,429
15	900	3.64	1.47	1,627	147	1,481
20	1,200	3.16	1.28	1,799	195	1,603
25	1,500	2.69	1.09	1,854	244	1,610
30	1,800	2.21	0.90	1,794	293	1,501
35	2,100	2.06	0.83	1,924	342	1,582
40	2,400	1.91	0.77	2,018	391	1,627
45	2,700	1.77	0.71	2,076	440	1,636
50	3,000	1.62	0.65	2,098	488	1,609
55	3,300	1.47	0.59	2,084	537	1,546
60	3,600	1.32	0.53	2,034	586	1,447
65	3,900	1.27	0.51	2,111	635	1,476
70	4,200	1.22	0.49	2,176	684	1,492
75	4,500	1.17	0.47	2,229	733	1,496
80	4,800	1.12	0.45	2,270	782	1,488
85	5,100	1.07	0.43	2,298	830	1,468
90	5,400	1.02	0.41	2,315	879	1,436
95	5,700	0.97	0.39	2,319	928	1,391
100	6,000	0.92	0.37	2,311	977	1,335
105	6,300	0.87	0.35	2,292	1026	1,266
110	6,600	0.82	0.33	2,259	1075	1,185
115	6,900	0.77	0.31	2,215	1123	1,092
120	7,200	0.72	0.29	2,159	1172	987
180	10,800	0.50	0.20	2,224	1758	465
360	21,600	0.27	0.11	2,393	3517	0
720	43,200	0.15	0.06	2,672	7034	0
1440	86,400	0.09	0.03	3,016	14067	0

PROJECT:	**KN 24394 US20, Arco to Idaho Falls**				[Linked Data]
BASIN:	011-R				[User Input Data]
DESIGNER:	**BCC, DEA**	**REPORTS TO:**	**SW-6945-R**		[Calculated Data]
DATE:	**9/29/2025**				

Bio-Infiltration Swales

Lowpoint Swale (Priority 1):

Width (feet):	0
Length (feet):	0
Sideslope 1 (H:V):	0
Sideslope 2 (H:V):	0
Max Depth (feet):	0
Max Volume When Full (CF):	0
LP Swale Infiltration Area (SF):	0

Road Slope Swale (Priority 2):	**Roadside Slope A**	**Roadside Slope B**
Base Width (feet):	2	2
Sideslope 1: (_H:1V)	2	2
Sideslope 2: (_H:V)	2	2
Longitudinal Slope (ft/ft):	0.0062	0.0031
Determination of Max Usable Swale Length Due to Slope:		
Max Water Depth At Downstream End (feet):	*1.5*	*1.5*
Swale Volume (CF):	*726*	*1452*
Length (feet):	*242*	*484*
Determination of Length of Bermed Swales:		
Swale Length (feet):	225	0
Storage Depth at U/S End (feet):	0.11	1.50
Swale Volume (CF):	724	0
Infiltration Area Per Bermed Swale (SF):	1172	0
Number of Bermed Swales:	6	0
Total Swale Infiltration Area (SF):	7034	0
Total Swale Volume (CF):	4343	0
Available Length 1 (feet):	1463	715
Proposed Length 2 (feet):	1350	0
Difference (feet):	113 OK! (Design> Req'd	715 OK! (Design> Req'd)

Total Design Storage (CF):	**4,343**
Total Infiltration Area (SF):	7,034
Swale Infiltration Rate (cfs):	0.163
Total Infiltration Rate (cfs):	0.163
Total Time to Drain (Hrs):	2.79
Required Treatment Volume:	
Basin Imp. Area x 0.5 inches /12 (CF)	0 OK! (Design> Req'd)
Required Storage Volume:	
Maximum Storage From Rational Column #7 (CF):	1,636 OK! (Design> Req'd)
Target Time to Drain:	
From Design Requirements (Hrs):	72 OK! (Design<Req'd)

PROJECT:	**KN 24394 US20, Arco to Idaho Falls**				**[Linked Data]**
BASIN:	012-R				**[User Input Data]**
DESIGNER:	**BCC, DEA**	**REPORTS TO:**	**#N/A**		**[Calculated Data]**
DATE:	**9/29/2025**				

Basin Data

	SF	Acre	C
Impervious Area	50,557	1.161	0.9
Pervious Area	60,626	1.392	0.2
Total Area	111,183	2.552	

Composite "C"	0.52	
Area * "C"	1.323	

			Rational Method Peak Flows (Q=C*I*A)		
Time of Concentration:	10.00	min			
25-Year Intensity	3.61	in/hr	25-year Peak	4.82	cfs
50-Year Intensity	4.16	in/hr	50-year Peak	5.55	cfs
100-year Intensity:	4.69	in/hr	100-year Peak	6.26	cfs

Selected Design Storm:	100-Year
Design Infiltration Rate (in/hr):	1.00

PROJECT:	**KN 24394 US20, Arco to Idaho Falls**			
BASIN:	012-R			
DESIGNER:	**BCC, DEA**	**REPORTS TO:**	**#N/A**	
DATE:	**9/29/2025**			

[Linked Data]
[User Input Data]
[Calculated Data]

MODIFIED RATIONAL METHOD (BOWSTRING) FOR REQUIRED DETENTION STORAGE

#1 Time Inc. (min.)	#2 Time Inc. (sec.) (#1*60)	#3 Intensity (in./hr.)	#4 Q dev. (cfs) (A*C*#3)	#5 V in (cu. ft.)	#6 V out (cu. ft.) (Outf.*#2)	#7 Req. Storage (cu. ft.) (#5-#6)
10.00	600.00	4.69	6.26	5,030	120	4,910
5	300	6.77	8.96	3,600	60	3,540
10	600	4.69	6.20	4,988	120	4,868
15	900	3.64	4.82	5,316	180	5,136
20	1,200	3.16	4.18	5,876	241	5,635
25	1,500	2.69	3.55	6,056	301	5,756
30	1,800	2.21	2.92	5,859	361	5,498
35	2,100	2.06	2.73	6,284	421	5,863
40	2,400	1.91	2.53	6,591	481	6,110
45	2,700	1.77	2.33	6,781	541	6,240
50	3,000	1.62	2.14	6,852	601	6,251
55	3,300	1.47	1.94	6,807	661	6,145
60	3,600	1.32	1.75	6,643	722	5,921
65	3,900	1.27	1.68	6,895	782	6,114
70	4,200	1.22	1.61	7,108	842	6,266
75	4,500	1.17	1.55	7,281	902	6,379
80	4,800	1.12	1.48	7,414	962	6,452
85	5,100	1.07	1.42	7,508	1022	6,486
90	5,400	1.02	1.35	7,562	1082	6,480
95	5,700	0.97	1.28	7,576	1142	6,434
100	6,000	0.92	1.22	7,551	1203	6,348
105	6,300	0.87	1.15	7,486	1263	6,223
110	6,600	0.82	1.08	7,381	1323	6,058
115	6,900	0.77	1.02	7,237	1383	5,854
120	7,200	0.72	0.95	7,052	1443	5,609
180	10,800	0.50	0.66	7,264	2165	5,100
360	21,600	0.27	0.36	7,817	4329	3,488
720	43,200	0.15	0.20	8,728	8658	70
1440	86,400	0.09	0.11	9,853	17316	0

PROJECT:	**KN 24394 US20, Arco to Idaho Falls**				[Linked Data]
BASIN:	012-R				[User Input Data]
DESIGNER:	**BCC, DEA**	**REPORTS TO:**	**#N/A**		[Calculated Data]
DATE:	**9/29/2025**				

Bio-Infiltration Swales

Lowpoint Swale (Priority 1):

Width (feet):	0
Length (feet):	0
Sideslope 1 (H:V):	0
Sideslope 2 (H:V):	0
Max Depth (feet):	0
Max Volume When Full (CF):	0
LP Swale Infiltration Area (SF):	0

Road Slope Swale (Priority 2):	**Roadside Slope A**	**Roadside Slope B**
Base Width (feet):	2	2
Sideslope 1: (_H:1V)	2	2
Sideslope 2: (_H:V)	2	2
Longitudinal Slope (ft/ft):	0.0067	NA
Determination of Max Usable Swale Length Due to Slope:		
Max Water Depth At Downstream End (feet):	*1.5*	*1.5*
Swale Volume (CF):	*672*	*0*
Length (feet):	*224*	*0*
Determination of Length of Bermed Swales:		
Swale Length (feet):	100	0
Storage Depth at U/S End (feet):	0.83	#VALUE!
Swale Volume (CF):	512	0
Infiltration Area Per Bermed Swale (SF):	666	0
Number of Bermed Swales:	13	0
Total Swale Infiltration Area (SF):	8658	0
Total Swale Volume (CF):	6655	0
Available Length 1 (feet):	1422	0
Proposed Length 2 (feet):	1300	0
Difference (feet):	122	0

OK! (Design> Req'd | **No Good (Design< Storage)**

Total Design Storage (CF):	**6,655**
Total Infiltration Area (SF):	8,658
Swale Infiltration Rate (cfs):	0.200
Total Infiltration Rate (cfs):	0.200
Total Time to Drain (Hrs):	8.99

Required Treatment Volume:		
Basin Imp. Area x 0.5 inches /12 (CF)	2,107	**OK! (Design> Req'd)**
Required Storage Volume:		
Maximum Storage From Rational Column #7 (CF):	6,486	**OK! (Design> Req'd)**
Target Time to Drain:		
From Design Requirements (Hrs):	72	**OK! (Design<Req'd)**

PROJECT:	**KN 24394 US20, Arco to Idaho Falls**				**[Linked Data]**
BASIN:	001-L				**[User Input Data]**
DESIGNER:	**BCC, DEA**	**REPORTS TO:**	**SW-6423-L**		**[Calculated Data]**
DATE:	**9/29/2025**				

Basin Data

	SF	Acre	C
Impervious Area	146,803	3.370	0.9
Pervious Area	301,074	6.912	0.2
Total Area	447,876	10.282	

Composite "C"	0.43	
Area * "C"	4.415	

			Rational Method Peak Flows (Q=C*I*A)		
Time of Concentration:	10.00	min			
25-Year Intensity	3.61	in/hr	25-year Peak	16.07	cfs
50-Year Intensity	4.16	in/hr	50-year Peak	18.52	cfs
100-year Intensity:	4.69	in/hr	100-year Peak	20.88	cfs

Selected Design Storm:	100-Year
Design Infiltration Rate (in/hr):	1.00

PROJECT:	**KN 24394 US20, Arco to Idaho Falls**			
BASIN:	001-L			
DESIGNER:	**BCC, DEA**	**REPORTS TO:**	**SW-6423-L**	
DATE:	**9/29/2025**			

[Linked Data]
[User Input Data]
[Calculated Data]

MODIFIED RATIONAL METHOD (BOWSTRING) FOR REQUIRED DETENTION STORAGE

#1 Time Inc. (min.)	#2 Time Inc. (sec.) (#1*60)	#3 Intensity (in./hr.)	#4 Q dev. (cfs) (A*C*#3)	#5 V in (cu. ft.)	#6 V out (cu. ft.) (Outf.*#2)	#7 Req. Storage (cu. ft.) (#5-#6)
10.00	600.00	4.69	20.88	16,788	576	16,213
5	300	6.77	29.89	12,017	288	11,729
10	600	4.69	20.71	16,650	576	16,074
15	900	3.64	16.07	17,744	863	16,880
20	1,200	3.16	13.97	19,610	1151	18,459
25	1,500	2.69	11.86	20,214	1439	18,775
30	1,800	2.21	9.76	19,555	1727	17,829
35	2,100	2.06	9.10	20,974	2014	18,959
40	2,400	1.91	8.45	21,999	2302	19,697
45	2,700	1.77	7.79	22,632	2590	20,042
50	3,000	1.62	7.14	22,871	2878	19,994
55	3,300	1.47	6.48	22,718	3165	19,552
60	3,600	1.32	5.83	22,171	3453	18,718
65	3,900	1.27	5.61	23,014	3741	19,273
70	4,200	1.22	5.39	23,724	4029	19,695
75	4,500	1.17	5.17	24,301	4316	19,985
80	4,800	1.12	4.95	24,746	4604	20,142
85	5,100	1.07	4.72	25,059	4892	20,167
90	5,400	1.02	4.50	25,239	5180	20,059
95	5,700	0.97	4.28	25,287	5467	19,819
100	6,000	0.92	4.06	25,202	5755	19,447
105	6,300	0.87	3.84	24,985	6043	18,942
110	6,600	0.82	3.62	24,635	6331	18,304
115	6,900	0.77	3.40	24,153	6618	17,534
120	7,200	0.72	3.18	23,538	6906	16,632
180	10,800	0.50	2.20	24,245	10359	13,886
360	21,600	0.27	1.20	26,090	20719	5,372
720	43,200	0.15	0.67	29,131	41437	0
1440	86,400	0.09	0.38	32,886	82874	0

PROJECT:	**KN 24394 US20, Arco to Idaho Falls**				[Linked Data]
BASIN:	001-L				[User Input Data]
DESIGNER:	**BCC, DEA**	**REPORTS TO:**	**SW-6423-L**		[Calculated Data]
DATE:	**9/29/2025**				

Bio-Infiltration Swales

Lowpoint Swale (Priority 1):

Width (feet):	0
Length (feet):	0
Sideslope 1 (H:V):	0
Sideslope 2 (H:V):	0
Max Depth (feet):	0
Max Volume When Full (CF):	0
LP Swale Infiltration Area (SF):	0

Road Slope Swale (Priority 2):	**Roadside Slope A**	**Roadside Slope B**
Base Width (feet):	2	2
Sideslope 1: (_H:1V)	2	2
Sideslope 2: (_H:V)	4	4
Longitudinal Slope (ft/ft):	0.0084	0.0034
Determination of Max Usable Swale Length Due to Slope:		
Max Water Depth At Downstream End (feet):	*1.5*	*1.5*
Swale Volume (CF):	*670*	*1654*
Length (feet):	*179*	*441*
Determination of Length of Bermed Swales:		
Swale Length (feet):	175	425
Storage Depth at U/S End (feet):	0.03	0.06
Swale Volume (CF):	670	1653
Infiltration Area Per Bermed Swale (SF):	1153	2833
Number of Bermed Swales:	4	13
Total Swale Infiltration Area (SF):	4613	36824
Total Swale Volume (CF):	2678	21495
Available Length 1 (feet):	717	5715
Proposed Length 2 (feet):	700	5525
Difference (feet):	17 OK! (Design> Req'd	190 OK! (Design> Req'd)

Total Design Storage (CF):	**24,173**
Total Infiltration Area (SF):	41,437
Swale Infiltration Rate (cfs):	0.959
Total Infiltration Rate (cfs):	0.959
Total Time to Drain (Hrs):	5.84
Required Treatment Volume:	
Basin Imp. Area x 0.5 inches /12 (CF)	6,117 OK! (Design> Req'd)
Required Storage Volume:	
Maximum Storage From Rational Column #7 (CF):	20,167 OK! (Design> Req'd)
Target Time to Drain:	
From Design Requirements (Hrs):	72 OK! (Design<Req'd)

PROJECT:	**KN 24394 US20, Arco to Idaho Falls**				**[Linked Data]**
BASIN:	002-L				**[User Input Data]**
DESIGNER:	**BCC, DEA**	**REPORTS TO:**	**SW-6489-L**		**[Calculated Data]**
DATE:	**9/29/2025**				

Basin Data

	SF	Acre	C
Impervious Area	99,456	2.283	0.9
Pervious Area	214,993	4.936	0.2
Total Area	314,449	7.219	

Composite "C"	0.42	
Area * "C"	3.042	

			Rational Method Peak Flows (Q=C*I*A)		
Time of Concentration:	10.00	min			
25-Year Intensity	3.61	in/hr	25-year Peak	11.07	cfs
50-Year Intensity	4.16	in/hr	50-year Peak	12.76	cfs
100-year Intensity:	4.69	in/hr	100-year Peak	14.39	cfs

Selected Design Storm:	100-Year
Design Infiltration Rate (in/hr):	1.00

PROJECT:	**KN 24394 US20, Arco to Idaho Falls**			
BASIN:	002-L			
DESIGNER:	**BCC, DEA**	**REPORTS TO:**	**SW-6489-L**	
DATE:	**9/29/2025**			

[Linked Data]
[User Input Data]
[Calculated Data]

MODIFIED RATIONAL METHOD (BOWSTRING) FOR REQUIRED DETENTION STORAGE

#1 Time Inc. (min.)	#2 Time Inc. (sec.) (#1*60)	#3 Intensity (in./hr.)	#4 Q dev. (cfs) (A*C*#3)	#5 V in (cu. ft.)	#6 V out (cu. ft.) (Outf.*#2)	#7 Req. Storage (cu. ft.) (#5-#6)
10.00	600.00	4.69	14.39	11,566	331	11,235
5	300	6.77	20.59	8,279	165	8,113
10	600	4.69	14.27	11,471	331	11,140
15	900	3.64	11.07	12,224	496	11,728
20	1,200	3.16	9.62	13,510	662	12,849
25	1,500	2.69	8.17	13,926	827	13,099
30	1,800	2.21	6.72	13,472	993	12,480
35	2,100	2.06	6.27	14,450	1158	13,291
40	2,400	1.91	5.82	15,156	1324	13,832
45	2,700	1.77	5.37	15,592	1489	14,103
50	3,000	1.62	4.92	15,757	1655	14,102
55	3,300	1.47	4.47	15,651	1820	13,831
60	3,600	1.32	4.02	15,275	1986	13,289
65	3,900	1.27	3.86	15,855	2151	13,704
70	4,200	1.22	3.71	16,344	2317	14,028
75	4,500	1.17	3.56	16,742	2482	14,260
80	4,800	1.12	3.41	17,049	2648	14,401
85	5,100	1.07	3.25	17,264	2813	14,451
90	5,400	1.02	3.10	17,388	2979	14,410
95	5,700	0.97	2.95	17,421	3144	14,277
100	6,000	0.92	2.80	17,363	3309	14,053
105	6,300	0.87	2.65	17,213	3475	13,738
110	6,600	0.82	2.49	16,972	3640	13,332
115	6,900	0.77	2.34	16,640	3806	12,834
120	7,200	0.72	2.19	16,216	3971	12,245
180	10,800	0.50	1.52	16,704	5957	10,747
360	21,600	0.27	0.82	17,975	11914	6,061
720	43,200	0.15	0.46	20,069	23828	0
1440	86,400	0.09	0.26	22,657	47656	0

PROJECT:	**KN 24394 US20, Arco to Idaho Falls**				[Linked Data]
BASIN:	002-L				[User Input Data]
DESIGNER:	**BCC, DEA**	**REPORTS TO:**	**SW-6489-L**		[Calculated Data]
DATE:	**9/29/2025**				

Bio-Infiltration Swales

Lowpoint Swale (Priority 1):

Width (feet):	0
Length (feet):	0
Sideslope 1 (H:V):	0
Sideslope 2 (H:V):	0
Max Depth (feet):	0
Max Volume When Full (CF):	0
LP Swale Infiltration Area (SF):	0

Road Slope Swale (Priority 2):	**Roadside Slope A**	**Roadside Slope B**
Base Width (feet):	2	2
Sideslope 1: (_H:1V)	2	2
Sideslope 2: (_H:V)	2	2
Longitudinal Slope (ft/ft):	0.0067	0.0033
Determination of Max Usable Swale Length Due to Slope:		
Max Water Depth At Downstream End (feet):	*1.5*	*1.5*
Swale Volume (CF):	*672*	*1364*
Length (feet):	*224*	*455*
Determination of Length of Bermed Swales:		
Swale Length (feet):	200	300
Storage Depth at U/S End (feet):	0.16	0.51
Swale Volume (CF):	667	1258
Infiltration Area Per Bermed Swale (SF):	1064	1806
Number of Bermed Swales:	19	2
Total Swale Infiltration Area (SF):	20216	3612
Total Swale Volume (CF):	12681	2516
Available Length 1 (feet):	3810	712
Proposed Length 2 (feet):	3800	600
Difference (feet):	10	OK! (Design> Req'd	112	OK! (Design> Req'd)

Total Design Storage (CF):	**15,197**
Total Infiltration Area (SF):	23,828
Swale Infiltration Rate (cfs):	0.552
Total Infiltration Rate (cfs):	0.552
Total Time to Drain (Hrs):	7.28
Required Treatment Volume:	
Basin Imp. Area x 0.5 inches /12 (CF)	4,144 OK! (Design> Req'd)
Required Storage Volume:	
Maximum Storage From Rational Column #7 (CF):	14,451 OK! (Design> Req'd)
Target Time to Drain:	
From Design Requirements (Hrs):	72 OK! (Design<Req'd)

PROJECT:	**KN 24394 US20, Arco to Idaho Falls**				**[Linked Data]**
BASIN:	003-L				**[User Input Data]**
DESIGNER:	**BCC, DEA**	**REPORTS TO:**	**SW-6534-L**		**[Calculated Data]**
DATE:	**9/29/2025**				

Basin Data

	SF	Acre	C
Impervious Area	35,517	0.815	0.9
Pervious Area	79,946	1.835	0.2
Total Area	115,463	2.651	

Composite "C"	0.42	
Area * "C"	1.101	

			Rational Method Peak Flows (Q=C*I*A)		
Time of Concentration:	10.00	min			
25-Year Intensity	3.61	in/hr	25-year Peak	4.01	cfs
50-Year Intensity	4.16	in/hr	50-year Peak	4.62	cfs
100-year Intensity:	4.69	in/hr	100-year Peak	5.21	cfs

Selected Design Storm:	100-Year
Design Infiltration Rate (in/hr):	1.00

PROJECT:	**KN 24394 US20, Arco to Idaho Falls**			
BASIN:	003-L			
DESIGNER:	**BCC, DEA**	**REPORTS TO:**	**SW-6534-L**	
DATE:	**9/29/2025**			

[Linked Data]
[User Input Data]
[Calculated Data]

MODIFIED RATIONAL METHOD (BOWSTRING) FOR REQUIRED DETENTION STORAGE

#1 Time Inc. (min.)	#2 Time Inc. (sec.) (#1*60)	#3 Intensity (in./hr.)	#4 Q dev. (cfs) (A*C*#3)	#5 V in (cu. ft.)	#6 V out (cu. ft.) (Outf.*#2)	#7 Req. Storage (cu. ft.) (#5-#6)
10.00	600.00	4.69	5.21	4,186	123	4,063
5	300	6.77	7.45	2,996	61	2,935
10	600	4.69	5.16	4,151	123	4,028
15	900	3.64	4.01	4,424	184	4,240
20	1,200	3.16	3.48	4,889	246	4,643
25	1,500	2.69	2.96	5,040	307	4,733
30	1,800	2.21	2.43	4,876	369	4,507
35	2,100	2.06	2.27	5,229	430	4,799
40	2,400	1.91	2.11	5,485	492	4,993
45	2,700	1.77	1.94	5,643	553	5,089
50	3,000	1.62	1.78	5,702	615	5,088
55	3,300	1.47	1.62	5,664	676	4,988
60	3,600	1.32	1.45	5,528	738	4,790
65	3,900	1.27	1.40	5,738	799	4,939
70	4,200	1.22	1.34	5,915	861	5,054
75	4,500	1.17	1.29	6,059	922	5,137
80	4,800	1.12	1.23	6,170	984	5,186
85	5,100	1.07	1.18	6,248	1045	5,203
90	5,400	1.02	1.12	6,293	1106	5,186
95	5,700	0.97	1.07	6,305	1168	5,137
100	6,000	0.92	1.01	6,283	1229	5,054
105	6,300	0.87	0.96	6,229	1291	4,938
110	6,600	0.82	0.90	6,142	1352	4,790
115	6,900	0.77	0.85	6,022	1414	4,608
120	7,200	0.72	0.79	5,869	1475	4,393
180	10,800	0.50	0.55	6,045	2213	3,832
360	21,600	0.27	0.30	6,505	4426	2,079
720	43,200	0.15	0.17	7,263	8852	0
1440	86,400	0.09	0.09	8,199	17703	0

PROJECT:	**KN 24394 US20, Arco to Idaho Falls**				[Linked Data]
BASIN:	003-L				[User Input Data]
DESIGNER:	**BCC, DEA**	**REPORTS TO:**	**SW-6534-L**		[Calculated Data]
DATE:	**9/29/2025**				

Bio-Infiltration Swales

Lowpoint Swale (Priority 1):

Width (feet):	0
Length (feet):	0
Sideslope 1 (H:V):	0
Sideslope 2 (H:V):	0
Max Depth (feet):	0
Max Volume When Full (CF):	0
LP Swale Infiltration Area (SF):	0

Road Slope Swale (Priority 2):	**Roadside Slope A**	**Roadside Slope B**
Base Width (feet):	2	2
Sideslope 1: (_H:1V)	2	2
Sideslope 2: (_H:V)	2	2
Longitudinal Slope (ft/ft):	0.0078	0.0016
Determination of Max Usable Swale Length Due to Slope:		
Max Water Depth At Downstream End (feet):	*1.5*	*1.5*
Swale Volume (CF):	*577*	*2813*
Length (feet):	*192*	*938*
Determination of Length of Bermed Swales:		
Swale Length (feet):	175	525
Storage Depth at U/S End (feet):	0.14	0.66
Swale Volume (CF):	574	2420
Infiltration Area Per Bermed Swale (SF):	922	3318
Number of Bermed Swales:	6	1
Total Swale Infiltration Area (SF):	5534	3318
Total Swale Volume (CF):	3446	2420
Available Length 1 (feet):	1085	529
Proposed Length 2 (feet):	1050	525
Difference (feet):	35	OK! (Design> Req'd	4	OK! (Design> Req'd)

Total Design Storage (CF):	**5,867**	
Total Infiltration Area (SF):	8,852	
Swale Infiltration Rate (cfs):	0.205	
Total Infiltration Rate (cfs):	0.205	
Total Time to Drain (Hrs):	7.05	
Required Treatment Volume:		
Basin Imp. Area x 0.5 inches /12 (CF)	1,480	OK! (Design> Req'd)
Required Storage Volume:		
Maximum Storage From Rational Column #7 (CF):	5,203	OK! (Design> Req'd)
Target Time to Drain:		
From Design Requirements (Hrs):	72	OK! (Design<Req'd)

PROJECT:	**KN 24394 US20, Arco to Idaho Falls**				**[Linked Data]**
BASIN:	004.1-L				**[User Input Data]**
DESIGNER:	**BCC, DEA**	**REPORTS TO:**	**SW-6550-L**		**[Calculated Data]**
DATE:	**9/29/2025**				

Basin Data

	SF	Acre	C
Impervious Area	57,898	1.329	0.9
Pervious Area	108,290	2.486	0.2
Total Area	166,188	3.815	

Composite "C"	0.44	
Area * "C"	1.693	
Time of Concentration:	10.00	min
25-Year Intensity	3.61	in/hr
50-Year Intensity	4.16	in/hr
100-year Intensity:	4.69	in/hr

Rational Method Peak Flows (Q=C*I*A)

25-year Peak	6.16	cfs
50-year Peak	7.10	cfs
100-year Peak	8.01	cfs

Selected Design Storm: 100-Year

Design Infiltration Rate (in/hr): 1.00

V(B) =	1.42			Goal Seek to 0
Tc (B) =	0.00	Tc(tot.) =	10.00	0.16
		Intensity (in/hr)=	4.69	

PROJECT:	**KN 24394 US20, Arco to Idaho Falls**			
BASIN:	004.1-L			
DESIGNER:	**BCC, DEA**	**REPORTS TO:**	**SW-6550-L**	
DATE:	**9/29/2025**			

[Linked Data]
[User Input Data]
[Calculated Data]

MODIFIED RATIONAL METHOD (BOWSTRING) FOR REQUIRED DETENTION STORAGE

#1 Time Inc. (min.)	#2 Time Inc. (sec.) (#1*60)	#3 Intensity (in./hr.)	#4 Q dev. (cfs) (A*C*#3)	#5 V in (cu. ft.)	#6 V out (cu. ft.) (Outf.*#2)	#7 Req. Storage (cu. ft.) (#5-#6)
10.00	600.00	4.69	8.01	6,439	184	6,255
5	300	6.77	11.46	4,609	92	4,517
10	600	4.69	7.94	6,386	184	6,202
15	900	3.64	6.16	6,805	276	6,529
20	1,200	3.16	5.36	7,521	368	7,153
25	1,500	2.69	4.55	7,753	460	7,293
30	1,800	2.21	3.74	7,500	552	6,948
35	2,100	2.06	3.49	8,044	644	7,400
40	2,400	1.91	3.24	8,437	736	7,701
45	2,700	1.77	2.99	8,680	828	7,852
50	3,000	1.62	2.74	8,772	920	7,852
55	3,300	1.47	2.49	8,713	1012	7,701
60	3,600	1.32	2.24	8,503	1104	7,399
65	3,900	1.27	2.15	8,826	1196	7,630
70	4,200	1.22	2.07	9,099	1288	7,810
75	4,500	1.17	1.98	9,320	1380	7,940
80	4,800	1.12	1.90	9,491	1472	8,019
85	5,100	1.07	1.81	9,611	1564	8,047
90	5,400	1.02	1.73	9,680	1656	8,024
95	5,700	0.97	1.64	9,698	1748	7,950
100	6,000	0.92	1.56	9,666	1840	7,825
105	6,300	0.87	1.47	9,582	1932	7,650
110	6,600	0.82	1.39	9,448	2024	7,424
115	6,900	0.77	1.30	9,263	2116	7,147
120	7,200	0.72	1.22	9,028	2208	6,819
180	10,800	0.50	0.85	9,299	3313	5,986
360	21,600	0.27	0.46	10,006	6625	3,381
720	43,200	0.15	0.26	11,172	13250	0
1440	86,400	0.09	0.15	12,613	26500	0

PROJECT:	**KN 24394 US20, Arco to Idaho Falls**				[Linked Data]
BASIN:	004.1-L				[User Input Data]
DESIGNER:	**BCC, DEA**	**REPORTS TO:**	**SW-6550-L**		[Calculated Data]
DATE:	**9/29/2025**				

Bio-Infiltration Swales

Lowpoint Swale (Priority 1):

Width (feet):	0
Length (feet):	0
Sideslope 1 (H:V):	2
Sideslope 2 (H:V):	2
Max Depth (feet):	1
Max Volume When Full (CF):	0
LP Swale Infiltration Area (SF):	0

Road Slope Swale (Priority 2):	**Roadside Slope A**	**Roadside Slope B**
Base Width (feet):	2	2
Sideslope 1: (_H:1V)	2	2
Sideslope 2: (_H:V)	2	2
Longitudinal Slope (ft/ft):	0.0054	NA
Determination of Max Usable Swale Length Due to Slope:		
Max Water Depth At Downstream End (feet):	*1.5*	*1.5*
Swale Volume (CF):	*833*	*0*
Length (feet):	*278*	*0*
Determination of Length of Bermed Swales:		
Swale Length (feet):	250	0
Storage Depth at U/S End (feet):	0.15	#VALUE!
Swale Volume (CF):	829	0
Infiltration Area Per Bermed Swale (SF):	1325	0
Number of Bermed Swales:	10	0
Total Swale Infiltration Area (SF):	13250	0
Total Swale Volume (CF):	8288	0
Available Length 1 (feet):	2631	0
Proposed Length 2 (feet):	2500	0
Difference (feet):	131 **OK! (Design> Req'd**	0 **No Good (Design< Storage)**

Total Design Storage (CF):	**8,288**
Total Infiltration Area (SF):	13,250
Swale Infiltration Rate (cfs):	0.307
Total Infiltration Rate (cfs):	0.307
Total Time to Drain (Hrs):	7.29

Required Treatment Volume:		
Basin Imp. Area x 0.5 inches /12 (CF)	2,412	**OK! (Design> Req'd)**
Required Storage Volume:		
Maximum Storage From Rational Column #7 (CF):	8,047	**OK! (Design> Req'd)**
Target Time to Drain:		
From Design Requirements (Hrs):	72	**OK! (Design<Req'd)**

PROJECT:	**KN 24394 US20, Arco to Idaho Falls**				**[Linked Data]**
BASIN:	004.2-L				**[User Input Data]**
DESIGNER:	**BCC, DEA**	**REPORTS TO:**	**SW-6577-L**		**[Calculated Data]**
DATE:	**9/29/2025**				

Basin Data

	SF	Acre	C
Impervious Area	110,555	2.538	0.9
Pervious Area	202,844	4.657	0.2
Total Area	313,399	7.195	

Composite "C"	0.45
Area * "C"	3.216

			Rational Method Peak Flows (Q=C*I*A)		
Time of Concentration:	10.00	min			
25-Year Intensity	3.61	in/hr	25-year Peak	11.70	cfs
50-Year Intensity	4.16	in/hr	50-year Peak	13.49	cfs
100-year Intensity:	4.69	in/hr	100-year Peak	15.21	cfs

Selected Design Storm: 100-Year

Design Infiltration Rate (in/hr): 1.00

V(B) =	1.86			Goal Seek to 0
Tc (B) =	0.00	Tc(tot.) =	10.00	0.16
		Intensity (in/hr)=	4.69	

PROJECT:	**KN 24394 US20, Arco to Idaho Falls**			
BASIN:	004.2-L			
DESIGNER:	**BCC, DEA**	**REPORTS TO:**	**SW-6577-L**	
DATE:	**9/29/2025**			

[Linked Data]
[User Input Data]
[Calculated Data]

MODIFIED RATIONAL METHOD (BOWSTRING) FOR REQUIRED DETENTION STORAGE

#1 Time Inc. (min.)	#2 Time Inc. (sec.) (#1*60)	#3 Intensity (in./hr.)	#4 Q dev. (cfs) (A*C*#3)	#5 V in (cu. ft.)	#6 V out (cu. ft.) (Outf.*#2)	#7 Req. Storage (cu. ft.) (#5-#6)
10.00	600.00	4.69	15.21	12,226	382	11,844
5	300	6.77	21.77	8,751	191	8,560
10	600	4.69	15.08	12,125	382	11,743
15	900	3.64	11.70	12,922	573	12,348
20	1,200	3.16	10.17	14,281	764	13,517
25	1,500	2.69	8.64	14,721	956	13,765
30	1,800	2.21	7.11	14,241	1147	13,094
35	2,100	2.06	6.63	15,274	1338	13,936
40	2,400	1.91	6.15	16,021	1529	14,492
45	2,700	1.77	5.68	16,481	1720	14,761
50	3,000	1.62	5.20	16,656	1911	14,745
55	3,300	1.47	4.72	16,544	2102	14,442
60	3,600	1.32	4.24	16,146	2293	13,853
65	3,900	1.27	4.08	16,760	2484	14,275
70	4,200	1.22	3.92	17,277	2675	14,601
75	4,500	1.17	3.76	17,697	2867	14,831
80	4,800	1.12	3.60	18,021	3058	14,964
85	5,100	1.07	3.44	18,249	3249	15,000
90	5,400	1.02	3.28	18,380	3440	14,940
95	5,700	0.97	3.12	18,415	3631	14,784
100	6,000	0.92	2.96	18,353	3822	14,531
105	6,300	0.87	2.80	18,195	4013	14,182
110	6,600	0.82	2.64	17,940	4204	13,736
115	6,900	0.77	2.48	17,589	4395	13,194
120	7,200	0.72	2.32	17,142	4587	12,555
180	10,800	0.50	1.60	17,656	6880	10,777
360	21,600	0.27	0.87	19,000	13760	5,240
720	43,200	0.15	0.49	21,214	27519	0
1440	86,400	0.09	0.28	23,949	55039	0

PROJECT:	**KN 24394 US20, Arco to Idaho Falls**				[Linked Data]
BASIN:	004.2-L				[User Input Data]
DESIGNER:	**BCC, DEA**	**REPORTS TO:**	**SW-6577-L**		[Calculated Data]
DATE:	**9/29/2025**				

Bio-Infiltration Swales

Lowpoint Swale (Priority 1):

Width (feet):	0
Length (feet):	0
Sideslope 1 (H:V):	2
Sideslope 2 (H:V):	2
Max Depth (feet):	1
Max Volume When Full (CF):	0
LP Swale Infiltration Area (SF):	0

Road Slope Swale (Priority 2):	**Roadside Slope A**	**Roadside Slope B**
Base Width (feet):	2	2
Sideslope 1: (_H:1V)	2	2
Sideslope 2: (_H:V)	4	2
Longitudinal Slope (ft/ft):	0.0238	NA
Determination of Max Usable Swale Length Due to Slope:		
Max Water Depth At Downstream End (feet):	*1.5*	*1.5*
Swale Volume (CF):	*236*	*0*
Length (feet):	*63*	*0*
Determination of Length of Bermed Swales:		
Swale Length (feet):	75	0
Storage Depth at U/S End (feet):	-0.29	#VALUE!
Swale Volume (CF):	234	0
Infiltration Area Per Bermed Swale (SF):	423	0
Number of Bermed Swales:	65	0
Total Swale Infiltration Area (SF):	27519	0
Total Swale Volume (CF):	15204	0
Available Length 1 (feet):	4900	0
Proposed Length 2 (feet):	4875	0
Difference (feet):	25	0

OK! (Design> Req'd

No Good (Design< Storage)

Total Design Storage (CF):	**15,204**
Total Infiltration Area (SF):	27,519
Swale Infiltration Rate (cfs):	0.637
Total Infiltration Rate (cfs):	0.637
Total Time to Drain (Hrs):	6.54

Required Treatment Volume:

Basin Imp. Area x 0.5 inches /12 (CF): 4,606 — OK! (Design> Req'd)

Required Storage Volume:

Maximum Storage From Rational Column #7 (CF): 15,000 — OK! (Design> Req'd)

Target Time to Drain:

From Design Requirements (Hrs): 72 — OK! (Design<Req'd)

PROJECT:	**KN 24394 US20, Arco to Idaho Falls**				**[Linked Data]**
BASIN:	004.3-L				**[User Input Data]**
DESIGNER:	**BCC, DEA**	**REPORTS TO:**	**SW-6626-L**		**[Calculated Data]**
DATE:	**9/29/2025**				

Basin Data

	SF	Acre	C
Impervious Area	120,026	2.755	0.9
Pervious Area	223,971	5.142	0.2
Total Area	343,997	7.897	

Composite "C"	0.44
Area * "C"	3.508

Time of Concentration:	10.00	min	**Rational Method Peak Flows (Q=C*I*A)**			
25-Year Intensity	3.61	in/hr	25-year Peak	12.77	cfs	
50-Year Intensity	4.16	in/hr	50-year Peak	14.72	cfs	
100-year Intensity:	4.69	in/hr	100-year Peak	16.59	cfs	

Selected Design Storm:	100-Year
Design Infiltration Rate (in/hr):	1.00

V(B) =	1.86			Goal Seek to 0
Tc (B) =	0.00	Tc(tot.) =	10.00	0.16
		Intensity (in/hr)=	4.69	

PROJECT:	**KN 24394 US20, Arco to Idaho Falls**			
BASIN:	004.3-L			
DESIGNER:	**BCC, DEA**	**REPORTS TO:**	**SW-6626-L**	
DATE:	**9/29/2025**			

[Linked Data]
[User Input Data]
[Calculated Data]

MODIFIED RATIONAL METHOD (BOWSTRING) FOR REQUIRED DETENTION STORAGE

#1 Time Inc. (min.)	#2 Time Inc. (sec.) (#1*60)	#3 Intensity (in./hr.)	#4 Q dev. (cfs) (A*C*#3)	#5 V in (cu. ft.)	#6 V out (cu. ft.) (Outf.*#2)	#7 Req. Storage (cu. ft.) (#5-#6)
10.00	600.00	4.69	16.59	13,339	492	12,847
5	300	6.77	23.75	9,548	246	9,302
10	600	4.69	16.45	13,229	492	12,737
15	900	3.64	12.77	14,098	738	13,360
20	1,200	3.16	11.10	15,581	984	14,597
25	1,500	2.69	9.43	16,061	1230	14,831
30	1,800	2.21	7.75	15,537	1476	14,062
35	2,100	2.06	7.23	16,664	1722	14,943
40	2,400	1.91	6.71	17,479	1968	15,511
45	2,700	1.77	6.19	17,982	2214	15,768
50	3,000	1.62	5.67	18,172	2460	15,712
55	3,300	1.47	5.15	18,050	2705	15,344
60	3,600	1.32	4.63	17,616	2951	14,664
65	3,900	1.27	4.46	18,285	3197	15,088
70	4,200	1.22	4.28	18,849	3443	15,406
75	4,500	1.17	4.10	19,308	3689	15,619
80	4,800	1.12	3.93	19,662	3935	15,726
85	5,100	1.07	3.75	19,910	4181	15,729
90	5,400	1.02	3.58	20,053	4427	15,626
95	5,700	0.97	3.40	20,091	4673	15,418
100	6,000	0.92	3.23	20,024	4919	15,105
105	6,300	0.87	3.05	19,851	5165	14,686
110	6,600	0.82	2.88	19,573	5411	14,162
115	6,900	0.77	2.70	19,190	5657	13,533
120	7,200	0.72	2.53	18,702	5903	12,799
180	10,800	0.50	1.75	19,264	8854	10,409
360	21,600	0.27	0.95	20,730	17709	3,021
720	43,200	0.15	0.53	23,145	35417	0
1440	86,400	0.09	0.30	26,129	70835	0

PROJECT:	**KN 24394 US20, Arco to Idaho Falls**				[Linked Data]
BASIN:	004.3-L				[User Input Data]
DESIGNER:	**BCC, DEA**	**REPORTS TO:**	**SW-6626-L**		[Calculated Data]
DATE:	**9/29/2025**				

Bio-Infiltration Swales

Lowpoint Swale (Priority 1):

Width (feet):	0
Length (feet):	0
Sideslope 1 (H:V):	2
Sideslope 2 (H:V):	2
Max Depth (feet):	1
Max Volume When Full (CF):	0
LP Swale Infiltration Area (SF):	0

Road Slope Swale (Priority 2):	**Roadside Slope A**	**Roadside Slope B**
Base Width (feet):	2	2
Sideslope 1: (_H:1V)	2	2
Sideslope 2: (_H:V)	4	2
Longitudinal Slope (ft/ft):	0.0151	0.0003
Determination of Max Usable Swale Length Due to Slope:		
Max Water Depth At Downstream End (feet):	*1.5*	*1.5*
Swale Volume (CF):	*373*	*15000*
Length (feet):	*99*	*5000*
Determination of Length of Bermed Swales:		
Swale Length (feet):	90	66
Storage Depth at U/S End (feet):	0.14	1.48
Swale Volume (CF):	371	490
Infiltration Area Per Bermed Swale (SF):	623	525
Number of Bermed Swales:	56	1
Total Swale Infiltration Area (SF):	34892	525
Total Swale Volume (CF):	20777	490
Available Length 1 (feet):	5334	66
Proposed Length 2 (feet):	5040	66
Difference (feet):	294 **OK! (Design> Req'd**	0 **No Good (Design< Storage)**

Total Design Storage (CF):	**21,267**
Total Infiltration Area (SF):	35,417
Swale Infiltration Rate (cfs):	0.820
Total Infiltration Rate (cfs):	0.820
Total Time to Drain (Hrs):	5.34

Required Treatment Volume:		
Basin Imp. Area x 0.5 inches /12 (CF)	5,001	**OK! (Design> Req'd)**
Required Storage Volume:		
Maximum Storage From Rational Column #7 (CF):	15,768	**OK! (Design> Req'd)**
Target Time to Drain:		
From Design Requirements (Hrs):	72	**OK! (Design<Req'd)**

PROJECT:	**KN 24394 US20, Arco to Idaho Falls**				**[Linked Data]**
BASIN:	005-L				**[User Input Data]**
DESIGNER:	**BCC, DEA**	**REPORTS TO:**	**SW-6689-L**		**[Calculated Data]**
DATE:	**9/29/2025**				

Basin Data

	SF	Acre	C
Impervious Area	109,173	2.506	0.9
Pervious Area	199,555	4.581	0.2
Total Area	308,728	7.087	

Composite "C"	0.45	
Area * "C"	3.172	

			Rational Method Peak Flows (Q=C*I*A)		
Time of Concentration:	10.00	min			
25-Year Intensity	3.61	in/hr	25-year Peak	11.55	cfs
50-Year Intensity	4.16	in/hr	50-year Peak	13.30	cfs
100-year Intensity:	4.69	in/hr	100-year Peak	15.00	cfs

Selected Design Storm:	100-Year
Design Infiltration Rate (in/hr):	1.00

PROJECT:	**KN 24394 US20, Arco to Idaho Falls**			
BASIN:	005-L			
DESIGNER:	**BCC, DEA**	**REPORTS TO:**	**SW-6689-L**	
DATE:	**9/29/2025**			

[Linked Data]
[User Input Data]
[Calculated Data]

MODIFIED RATIONAL METHOD (BOWSTRING) FOR REQUIRED DETENTION STORAGE

#1 Time Inc. (min.)	#2 Time Inc. (sec.) (#1*60)	#3 Intensity (in./hr.)	#4 Q dev. (cfs) (A*C*#3)	#5 V in (cu. ft.)	#6 V out (cu. ft.) (Outf.*#2)	#7 Req. Storage (cu. ft.) (#5-#6)
10.00	600.00	4.69	15.00	12,060	419	11,641
5	300	6.77	21.47	8,632	209	8,423
10	600	4.69	14.88	11,960	419	11,541
15	900	3.64	11.55	12,746	628	12,118
20	1,200	3.16	10.03	14,087	838	13,250
25	1,500	2.69	8.52	14,521	1047	13,474
30	1,800	2.21	7.01	14,048	1257	12,791
35	2,100	2.06	6.54	15,067	1466	13,601
40	2,400	1.91	6.07	15,803	1676	14,128
45	2,700	1.77	5.60	16,258	1885	14,373
50	3,000	1.62	5.13	16,430	2094	14,335
55	3,300	1.47	4.66	16,319	2304	14,016
60	3,600	1.32	4.19	15,927	2513	13,414
65	3,900	1.27	4.03	16,532	2723	13,809
70	4,200	1.22	3.87	17,042	2932	14,110
75	4,500	1.17	3.71	17,457	3142	14,315
80	4,800	1.12	3.55	17,777	3351	14,426
85	5,100	1.07	3.39	18,001	3560	14,441
90	5,400	1.02	3.24	18,131	3770	14,361
95	5,700	0.97	3.08	18,165	3979	14,186
100	6,000	0.92	2.92	18,104	4189	13,915
105	6,300	0.87	2.76	17,948	4398	13,550
110	6,600	0.82	2.60	17,697	4608	13,089
115	6,900	0.77	2.44	17,350	4817	12,533
120	7,200	0.72	2.28	16,909	5027	11,882
180	10,800	0.50	1.58	17,417	7540	9,877
360	21,600	0.27	0.86	18,742	15080	3,663
720	43,200	0.15	0.48	20,926	30159	0
1440	86,400	0.09	0.27	23,624	60318	0

PROJECT:	**KN 24394 US20, Arco to Idaho Falls**				[Linked Data]
BASIN:	005-L				[User Input Data]
DESIGNER:	**BCC, DEA**	**REPORTS TO:**	**SW-6689-L**		[Calculated Data]
DATE:	**9/29/2025**				

Bio-Infiltration Swales

Lowpoint Swale (Priority 1):

Width (feet):	0
Length (feet):	0
Sideslope 1 (H:V):	0
Sideslope 2 (H:V):	0
Max Depth (feet):	0
Max Volume When Full (CF):	0
LP Swale Infiltration Area (SF):	0

Road Slope Swale (Priority 2):	**Roadside Slope A**	**Roadside Slope B**
Base Width (feet):	2	2
Sideslope 1: (_H:1V)	2	2
Sideslope 2: (_H:V)	4	4
Longitudinal Slope (ft/ft):	0.0049	0.0035
Determination of Max Usable Swale Length Due to Slope:		
Max Water Depth At Downstream End (feet):	*1.5*	*1.5*
Swale Volume (CF):	*1148*	*1607*
Length (feet):	*306*	*429*
Determination of Length of Bermed Swales:		
Swale Length (feet):	300	400
Storage Depth at U/S End (feet):	0.03	0.10
Swale Volume (CF):	1148	1604
Infiltration Area Per Bermed Swale (SF):	1977	2720
Number of Bermed Swales:	7	6
Total Swale Infiltration Area (SF):	13839	16320
Total Swale Volume (CF):	8034	9624
Available Length 1 (feet):	2311	2606
Proposed Length 2 (feet):	2100	2400
Difference (feet):	211 OK! (Design> Req'd	206 OK! (Design> Req'd)

Total Design Storage (CF):	**17,658**
Total Infiltration Area (SF):	30,159
Swale Infiltration Rate (cfs):	0.698
Total Infiltration Rate (cfs):	0.698
Total Time to Drain (Hrs):	5.75

Required Treatment Volume:		
Basin Imp. Area x 0.5 inches /12 (CF)	4,549	OK! (Design> Req'd)
Required Storage Volume:		
Maximum Storage From Rational Column #7 (CF):	14,441	OK! (Design> Req'd)
Target Time to Drain:		
From Design Requirements (Hrs):	72	OK! (Design<Req'd)

PROJECT:	**KN 24394 US20, Arco to Idaho Falls**				**[Linked Data]**
BASIN:	006-L				**[User Input Data]**
DESIGNER:	**BCC, DEA**	**REPORTS TO:**	**SW-6711-L**		**[Calculated Data]**
DATE:	**9/29/2025**				

Basin Data

	SF	Acre	C
Impervious Area	118,797	2.727	0.9
Pervious Area	214,209	4.918	0.2
Total Area	333,007	7.645	

Composite "C"	0.45	
Area * "C"	3.438	

			Rational Method Peak Flows (Q=C*I*A)		
Time of Concentration:	10.00	min			
25-Year Intensity	3.61	in/hr	25-year Peak	12.51	cfs
50-Year Intensity	4.16	in/hr	50-year Peak	14.42	cfs
100-year Intensity:	4.69	in/hr	100-year Peak	16.26	cfs

Selected Design Storm:	100-Year
Design Infiltration Rate (in/hr):	1.00

PROJECT:	**KN 24394 US20, Arco to Idaho Falls**			
BASIN:	006-L			
DESIGNER:	**BCC, DEA**	**REPORTS TO:**	**SW-6711-L**	
DATE:	**9/29/2025**			

[Linked Data]
[User Input Data]
[Calculated Data]

MODIFIED RATIONAL METHOD (BOWSTRING) FOR REQUIRED DETENTION STORAGE

#1 Time Inc. (min.)	#2 Time Inc. (sec.) (#1*60)	#3 Intensity (in./hr.)	#4 Q dev. (cfs) (A*C*#3)	#5 V in (cu. ft.)	#6 V out (cu. ft.) (Outf.*#2)	#7 Req. Storage (cu. ft.) (#5-#6)
10.00	600.00	4.69	16.26	13,072	433	12,639
5	300	6.77	23.28	9,357	216	9,140
10	600	4.69	16.12	12,964	433	12,531
15	900	3.64	12.51	13,816	649	13,167
20	1,200	3.16	10.88	15,269	865	14,404
25	1,500	2.69	9.24	15,739	1081	14,658
30	1,800	2.21	7.60	15,226	1298	13,929
35	2,100	2.06	7.09	16,331	1514	14,817
40	2,400	1.91	6.58	17,129	1730	15,399
45	2,700	1.77	6.07	17,622	1946	15,675
50	3,000	1.62	5.56	17,808	2163	15,645
55	3,300	1.47	5.05	17,689	2379	15,310
60	3,600	1.32	4.54	17,263	2595	14,668
65	3,900	1.27	4.37	17,919	2812	15,108
70	4,200	1.22	4.19	18,472	3028	15,444
75	4,500	1.17	4.02	18,922	3244	15,678
80	4,800	1.12	3.85	19,268	3460	15,808
85	5,100	1.07	3.68	19,512	3677	15,835
90	5,400	1.02	3.51	19,652	3893	15,759
95	5,700	0.97	3.33	19,689	4109	15,580
100	6,000	0.92	3.16	19,623	4326	15,298
105	6,300	0.87	2.99	19,454	4542	14,912
110	6,600	0.82	2.82	19,182	4758	14,424
115	6,900	0.77	2.65	18,806	4974	13,832
120	7,200	0.72	2.48	18,328	5191	13,137
180	10,800	0.50	1.72	18,878	7786	11,092
360	21,600	0.27	0.93	20,315	15572	4,743
720	43,200	0.15	0.52	22,682	31144	0
1440	86,400	0.09	0.30	25,606	62288	0

PROJECT:	**KN 24394 US20, Arco to Idaho Falls**				**[Linked Data]**
BASIN:	006-L				**[User Input Data]**
DESIGNER:	**BCC, DEA**	**REPORTS TO:**	**SW-6711-L**		**[Calculated Data]**
DATE:	**9/29/2025**				

Bio-Infiltration Swales

Lowpoint Swale (Priority 1):

Width (feet):	0
Length (feet):	0
Sideslope 1 (H:V):	0
Sideslope 2 (H:V):	0
Max Depth (feet):	0
Max Volume When Full (CF):	0
LP Swale Infiltration Area (SF):	0

Road Slope Swale (Priority 2):	**Roadside Slope A**	**Roadside Slope B**
Base Width (feet):	2	2
Sideslope 1: (_H:1V)	2	2
Sideslope 2: (_H:V)	4	2
Longitudinal Slope (ft/ft):	0.0111	0.0105
Determination of Max Usable Swale Length Due to Slope:		
Max Water Depth At Downstream End (feet):	*1.5*	*1.5*
Swale Volume (CF):	*507*	*429*
Length (feet):	*135*	*143*
Determination of Length of Bermed Swales:		
Swale Length (feet):	125	125
Storage Depth at U/S End (feet):	0.11	0.19
Swale Volume (CF):	505	425
Infiltration Area Per Bermed Swale (SF):	855	672
Number of Bermed Swales:	16	26
Total Swale Infiltration Area (SF):	13675	17469
Total Swale Volume (CF):	8088	11045
Available Length 1 (feet):	2001	3257
Proposed Length 2 (feet):	2000	3250
Difference (feet):	1 **OK! (Design> Req'd**	7 **OK! (Design> Req'd)**

Total Design Storage (CF):	**19,133**	
Total Infiltration Area (SF):	31,144	
Swale Infiltration Rate (cfs):	0.721	
Total Infiltration Rate (cfs):	0.721	
Total Time to Drain (Hrs):	6.10	
Required Treatment Volume:		
Basin Imp. Area x 0.5 inches /12 (CF)	4,950	**OK! (Design> Req'd)**
Required Storage Volume:		
Maximum Storage From Rational Column #7 (CF):	15,835	**OK! (Design> Req'd)**
Target Time to Drain:		
From Design Requirements (Hrs):	72	**OK! (Design<Req'd)**

PROJECT:	**KN 24394 US20, Arco to Idaho Falls**				**[Linked Data]**
BASIN:	008-L				**[User Input Data]**
DESIGNER:	**BCC, DEA**	**REPORTS TO:**	**SW-6781-L**		**[Calculated Data]**
DATE:	**9/29/2025**				

Basin Data

	SF	Acre	C
Impervious Area	0	0.000	0.9
Pervious Area	39,732	0.912	0.2
Total Area	39,732	0.912	

Composite "C"	0.20	
Area * "C"	0.182	

			Rational Method Peak Flows (Q=C*I*A)		
Time of Concentration:	10.00	min			
25-Year Intensity	3.61	in/hr	25-year Peak	0.66	cfs
50-Year Intensity	4.16	in/hr	50-year Peak	0.77	cfs
100-year Intensity:	4.69	in/hr	100-year Peak	0.86	cfs

Selected Design Storm:	100-Year
Design Infiltration Rate (in/hr):	1.00

PROJECT:	**KN 24394 US20, Arco to Idaho Falls**			
BASIN:	008-L			
DESIGNER:	**BCC, DEA**	**REPORTS TO:**	**SW-6781-L**	
DATE:	**9/29/2025**			

[Linked Data]
[User Input Data]
[Calculated Data]

MODIFIED RATIONAL METHOD (BOWSTRING) FOR REQUIRED DETENTION STORAGE

#1 Time Inc. (min.)	#2 Time Inc. (sec.) (#1*60)	#3 Intensity (in./hr.)	#4 Q dev. (cfs) (A*C*#3)	#5 V in (cu. ft.)	#6 V out (cu. ft.) (Outf.*#2)	#7 Req. Storage (cu. ft.) (#5-#6)
10.00	600.00	4.69	0.86	694	32	661
5	300	6.77	1.24	496	16	480
10	600	4.69	0.86	688	32	656
15	900	3.64	0.66	733	48	685
20	1,200	3.16	0.58	810	65	746
25	1,500	2.69	0.49	835	81	754
30	1,800	2.21	0.40	808	97	711
35	2,100	2.06	0.38	867	113	754
40	2,400	1.91	0.35	909	129	780
45	2,700	1.77	0.32	935	145	790
50	3,000	1.62	0.29	945	161	784
55	3,300	1.47	0.27	939	178	761
60	3,600	1.32	0.24	916	194	722
65	3,900	1.27	0.23	951	210	741
70	4,200	1.22	0.22	980	226	754
75	4,500	1.17	0.21	1,004	242	762
80	4,800	1.12	0.20	1,022	258	764
85	5,100	1.07	0.20	1,035	274	761
90	5,400	1.02	0.19	1,043	291	752
95	5,700	0.97	0.18	1,045	307	738
100	6,000	0.92	0.17	1,041	323	718
105	6,300	0.87	0.16	1,032	339	693
110	6,600	0.82	0.15	1,018	355	663
115	6,900	0.77	0.14	998	371	627
120	7,200	0.72	0.13	972	387	585
180	10,800	0.50	0.09	1,002	581	421
360	21,600	0.27	0.05	1,078	1162	0
720	43,200	0.15	0.03	1,204	2324	0
1440	86,400	0.09	0.02	1,359	4649	0

PROJECT:	**KN 24394 US20, Arco to Idaho Falls**				[Linked Data]
BASIN:	008-L				[User Input Data]
DESIGNER:	**BCC, DEA**	**REPORTS TO:**	**SW-6781-L**		[Calculated Data]
DATE:	**9/29/2025**				

Bio-Infiltration Swales

Lowpoint Swale (Priority 1):

Width (feet):	0
Length (feet):	0
Sideslope 1 (H:V):	0
Sideslope 2 (H:V):	0
Max Depth (feet):	0
Max Volume When Full (CF):	0
LP Swale Infiltration Area (SF):	0

Road Slope Swale (Priority 2):	**Roadside Slope A**	**Roadside Slope B**
Base Width (feet):	2	2
Sideslope 1: (_H:1V)	2	2
Sideslope 2: (_H:V)	2	2
Longitudinal Slope (ft/ft):	0.0026	0.0063
Determination of Max Usable Swale Length Due to Slope:		
Max Water Depth At Downstream End (feet):	*1.5*	*1.5*
Swale Volume (CF):	*1731*	*714*
Length (feet):	*577*	*238*
Determination of Length of Bermed Swales:		
Swale Length (feet):	550	225
Storage Depth at U/S End (feet):	0.07	0.08
Swale Volume (CF):	1729	713
Infiltration Area Per Bermed Swale (SF):	2827	1162
Number of Bermed Swales:	0	2
Total Swale Infiltration Area (SF):	0	2324
Total Swale Volume (CF):	0	1426
Available Length 1 (feet):	342	822
Proposed Length 2 (feet):	0	450
Difference (feet):	342 **OK! (Design> Req'd**	372 **OK! (Design> Req'd)**

Total Design Storage (CF):	**1,426**
Total Infiltration Area (SF):	2,324
Swale Infiltration Rate (cfs):	0.054
Total Infiltration Rate (cfs):	0.054
Total Time to Drain (Hrs):	4.08

Required Treatment Volume:		
Basin Imp. Area x 0.5 inches /12 (CF)	0	**OK! (Design> Req'd)**
Required Storage Volume:		
Maximum Storage From Rational Column #7 (CF):	790	**OK! (Design> Req'd)**
Target Time to Drain:		
From Design Requirements (Hrs):	72	**OK! (Design<Req'd)**

PROJECT:	**KN 24394 US20, Arco to Idaho Falls**				**[Linked Data]**
BASIN:	008-L				**[User Input Data]**
DESIGNER:	**BCC, DEA**	**REPORTS TO:**	**SW-6781-L**		**[Calculated Data]**
DATE:	**9/29/2025**				

Basin Data

	SF	Acre	C
Impervious Area	0	0.000	0.9
Pervious Area	39,732	0.912	0.2
Total Area	39,732	0.912	

Composite "C"	0.20	
Area * "C"	0.182	

			Rational Method Peak Flows (Q=C*I*A)		
Time of Concentration:	10.00	min			
25-Year Intensity	3.61	in/hr	25-year Peak	0.66	cfs
50-Year Intensity	4.16	in/hr	50-year Peak	0.77	cfs
100-year Intensity:	4.69	in/hr	100-year Peak	0.86	cfs

Selected Design Storm:	100-Year
Design Infiltration Rate (in/hr):	1.00

PROJECT:	**KN 24394 US20, Arco to Idaho Falls**			
BASIN:	008-L			
DESIGNER:	**BCC, DEA**	**REPORTS TO:**	**SW-6781-L**	
DATE:	**9/29/2025**			

[Linked Data]
[User Input Data]
[Calculated Data]

MODIFIED RATIONAL METHOD (BOWSTRING) FOR REQUIRED DETENTION STORAGE

#1 Time Inc. (min.)	#2 Time Inc. (sec.) (#1*60)	#3 Intensity (in./hr.)	#4 Q dev. (cfs) (A*C*#3)	#5 V in (cu. ft.)	#6 V out (cu. ft.) (Outf.*#2)	#7 Req. Storage (cu. ft.) (#5-#6)
10.00	600.00	4.69	0.86	694	35	658
5	300	6.77	1.24	496	18	479
10	600	4.69	0.86	688	35	652
15	900	3.64	0.66	733	53	680
20	1,200	3.16	0.58	810	71	739
25	1,500	2.69	0.49	835	89	747
30	1,800	2.21	0.40	808	106	702
35	2,100	2.06	0.38	867	124	743
40	2,400	1.91	0.35	909	142	767
45	2,700	1.77	0.32	935	159	776
50	3,000	1.62	0.29	945	177	768
55	3,300	1.47	0.27	939	195	744
60	3,600	1.32	0.24	916	213	704
65	3,900	1.27	0.23	951	230	721
70	4,200	1.22	0.22	980	248	732
75	4,500	1.17	0.21	1,004	266	738
80	4,800	1.12	0.20	1,022	283	739
85	5,100	1.07	0.20	1,035	301	734
90	5,400	1.02	0.19	1,043	319	724
95	5,700	0.97	0.18	1,045	336	708
100	6,000	0.92	0.17	1,041	354	687
105	6,300	0.87	0.16	1,032	372	660
110	6,600	0.82	0.15	1,018	390	628
115	6,900	0.77	0.14	998	407	591
120	7,200	0.72	0.13	972	425	547
180	10,800	0.50	0.09	1,002	638	364
360	21,600	0.27	0.05	1,078	1275	0
720	43,200	0.15	0.03	1,204	2550	0
1440	86,400	0.09	0.02	1,359	5100	0

PROJECT:	**KN 24394 US20, Arco to Idaho Falls**				[Linked Data]
BASIN:	008-L				[User Input Data]
DESIGNER:	**BCC, DEA**	**REPORTS TO:**	**SW-6781-L**		[Calculated Data]
DATE:	**9/29/2025**				

Bio-Infiltration Swales

Lowpoint Swale (Priority 1):

Width (feet):	0
Length (feet):	0
Sideslope 1 (H:V):	0
Sideslope 2 (H:V):	0
Max Depth (feet):	0
Max Volume When Full (CF):	0
LP Swale Infiltration Area (SF):	0

Road Slope Swale (Priority 2):	**Roadside Slope A**	**Roadside Slope B**
Base Width (feet):	2	2
Sideslope 1: (_H:1V)	2	2
Sideslope 2: (_H:V)	2	2
Longitudinal Slope (ft/ft):	0.0029	0.0017
Determination of Max Usable Swale Length Due to Slope:		
Max Water Depth At Downstream End (feet):	*1.5*	*1.5*
Swale Volume (CF):	*1552*	*2647*
Length (feet):	*517*	*882*
Determination of Length of Bermed Swales:		
Swale Length (feet):	500	330
Storage Depth at U/S End (feet):	0.05	0.94
Swale Volume (CF):	1551	1804
Infiltration Area Per Bermed Swale (SF):	2550	2270
Number of Bermed Swales:	1	0
Total Swale Infiltration Area (SF):	2550	0
Total Swale Volume (CF):	1551	0
Available Length 1 (feet):	597	330
Proposed Length 2 (feet):	500	0
Difference (feet):	97 OK! (Design> Req'd	330 OK! (Design> Req'd)

Total Design Storage (CF):	**1,551**
Total Infiltration Area (SF):	2,550
Swale Infiltration Rate (cfs):	0.059
Total Infiltration Rate (cfs):	0.059
Total Time to Drain (Hrs):	3.65

Required Treatment Volume:		
Basin Imp. Area x 0.5 inches /12 (CF)	0	OK! (Design> Req'd)
Required Storage Volume:		
Maximum Storage From Rational Column #7 (CF):	776	OK! (Design> Req'd)
Target Time to Drain:		
From Design Requirements (Hrs):	72	OK! (Design<Req'd)

PROJECT:	**KN 24394 US20, Arco to Idaho Falls**				**[Linked Data]**
BASIN:	009-L				**[User Input Data]**
DESIGNER:	**BCC, DEA**	**REPORTS TO:**	**SW-6793-L**		**[Calculated Data]**
DATE:	**9/29/2025**				

Basin Data

	SF	Acre	C
Impervious Area	7,075	0.162	0.9
Pervious Area	86,865	1.994	0.2
Total Area	93,940	2.157	

Composite "C"	0.25	
Area * "C"	0.545	

			Rational Method Peak Flows (Q=C*I*A)		
Time of Concentration:	10.00	min			
25-Year Intensity	3.61	in/hr	25-year Peak	1.98	cfs
50-Year Intensity	4.16	in/hr	50-year Peak	2.29	cfs
100-year Intensity:	4.69	in/hr	100-year Peak	2.58	cfs

Selected Design Storm:	100-Year
Design Infiltration Rate (in/hr):	1.00

PROJECT:	**KN 24394 US20, Arco to Idaho Falls**			
BASIN:	009-L			
DESIGNER:	**BCC, DEA**	**REPORTS TO:**	**SW-6793-L**	
DATE:	**9/29/2025**			

[Linked Data]
[User Input Data]
[Calculated Data]

MODIFIED RATIONAL METHOD (BOWSTRING) FOR REQUIRED DETENTION STORAGE

#1 Time Inc. (min.)	#2 Time Inc. (sec.) (#1*60)	#3 Intensity (in./hr.)	#4 Q dev. (cfs) (A*C*#3)	#5 V in (cu. ft.)	#6 V out (cu. ft.) (Outf.*#2)	#7 Req. Storage (cu. ft.) (#5-#6)
10.00	600.00	4.69	2.58	2,072	128	1,945
5	300	6.77	3.69	1,483	64	1,419
10	600	4.69	2.56	2,055	128	1,928
15	900	3.64	1.98	2,190	191	1,999
20	1,200	3.16	1.72	2,421	255	2,165
25	1,500	2.69	1.46	2,495	319	2,176
30	1,800	2.21	1.20	2,414	383	2,031
35	2,100	2.06	1.12	2,589	446	2,142
40	2,400	1.91	1.04	2,715	510	2,205
45	2,700	1.77	0.96	2,793	574	2,219
50	3,000	1.62	0.88	2,823	638	2,185
55	3,300	1.47	0.80	2,804	702	2,102
60	3,600	1.32	0.72	2,737	765	1,971
65	3,900	1.27	0.69	2,841	829	2,011
70	4,200	1.22	0.66	2,928	893	2,035
75	4,500	1.17	0.64	3,000	957	2,043
80	4,800	1.12	0.61	3,054	1021	2,034
85	5,100	1.07	0.58	3,093	1084	2,009
90	5,400	1.02	0.56	3,115	1148	1,967
95	5,700	0.97	0.53	3,121	1212	1,909
100	6,000	0.92	0.50	3,111	1276	1,835
105	6,300	0.87	0.47	3,084	1339	1,744
110	6,600	0.82	0.45	3,041	1403	1,638
115	6,900	0.77	0.42	2,981	1467	1,514
120	7,200	0.72	0.39	2,905	1531	1,375
180	10,800	0.50	0.27	2,993	2296	696
360	21,600	0.27	0.15	3,220	4592	0
720	43,200	0.15	0.08	3,596	9185	0
1440	86,400	0.09	0.05	4,059	18369	0

PROJECT:	**KN 24394 US20, Arco to Idaho Falls**				[Linked Data]
BASIN:	009-L				[User Input Data]
DESIGNER:	**BCC, DEA**	**REPORTS TO:**	**SW-6793-L**		[Calculated Data]
DATE:	**9/29/2025**				

Bio-Infiltration Swales

Lowpoint Swale (Priority 1):

Width (feet):	0
Length (feet):	0
Sideslope 1 (H:V):	0
Sideslope 2 (H:V):	0
Max Depth (feet):	0
Max Volume When Full (CF):	0
LP Swale Infiltration Area (SF):	0

Road Slope Swale (Priority 2):	**Roadside Slope A**	**Roadside Slope B**
Base Width (feet):	2	2
Sideslope 1: (_H:1V)	2	2
Sideslope 2: (_H:V)	2	2
Longitudinal Slope (ft/ft):	0.0053	0.0041
Determination of Max Usable Swale Length Due to Slope:		
Max Water Depth At Downstream End (feet):	*1.5*	*1.5*
Swale Volume (CF):	*849*	*1098*
Length (feet):	*283*	*366*
Determination of Length of Bermed Swales:		
Swale Length (feet):	275	350
Storage Depth at U/S End (feet):	0.04	0.06
Swale Volume (CF):	849	1096
Infiltration Area Per Bermed Swale (SF):	1398	1796
Number of Bermed Swales:	4	2
Total Swale Infiltration Area (SF):	5594	3591
Total Swale Volume (CF):	3395	2193
Available Length 1 (feet):	1124	977
Proposed Length 2 (feet):	1100	700
Difference (feet):	24 **OK! (Design> Req'd**	277 **OK! (Design> Req'd)**

Total Design Storage (CF):	**5,588**
Total Infiltration Area (SF):	9,185
Swale Infiltration Rate (cfs):	0.213
Total Infiltration Rate (cfs):	0.213
Total Time to Drain (Hrs):	2.90
Required Treatment Volume:	
Basin Imp. Area x 0.5 inches /12 (CF)	295 **OK! (Design> Req'd)**
Required Storage Volume:	
Maximum Storage From Rational Column #7 (CF):	2,219 **OK! (Design> Req'd)**
Target Time to Drain:	
From Design Requirements (Hrs):	72 **OK! (Design<Req'd)**

PROJECT:	**KN 24394 US20, Arco to Idaho Falls**				**[Linked Data]**
BASIN:	010-L				**[User Input Data]**
DESIGNER:	**BCC, DEA**	**REPORTS TO:**	**SW-6802-L**		**[Calculated Data]**
DATE:	**9/29/2025**				

Basin Data

	SF	Acre	C
Impervious Area	77,598	1.781	0.9
Pervious Area	153,194	3.517	0.2
Total Area	230,792	5.298	

Composite "C"	0.44	
Area * "C"	2.307	

			Rational Method Peak Flows (Q=C*I*A)		
Time of Concentration:	10.00	min			
25-Year Intensity	3.61	in/hr	25-year Peak	8.40	cfs
50-Year Intensity	4.16	in/hr	50-year Peak	9.68	cfs
100-year Intensity:	4.69	in/hr	100-year Peak	10.91	cfs

Selected Design Storm:	100-Year
Design Infiltration Rate (in/hr):	1.00

PROJECT:	**KN 24394 US20, Arco to Idaho Falls**			
BASIN:	010-L			
DESIGNER:	**BCC, DEA**	**REPORTS TO:**	**SW-6802-L**	
DATE:	**9/29/2025**			

[Linked Data]
[User Input Data]
[Calculated Data]

MODIFIED RATIONAL METHOD (BOWSTRING) FOR REQUIRED DETENTION STORAGE

#1 Time Inc. (min.)	#2 Time Inc. (sec.) (#1*60)	#3 Intensity (in./hr.)	#4 Q dev. (cfs) (A*C*#3)	#5 V in (cu. ft.)	#6 V out (cu. ft.) (Outf.*#2)	#7 Req. Storage (cu. ft.) (#5-#6)
10.00	600.00	4.69	10.91	8,770	292	8,479
5	300	6.77	15.62	6,278	146	6,132
10	600	4.69	10.82	8,698	292	8,406
15	900	3.64	8.40	9,269	437	8,832
20	1,200	3.16	7.30	10,244	583	9,661
25	1,500	2.69	6.20	10,560	729	9,831
30	1,800	2.21	5.10	10,216	875	9,341
35	2,100	2.06	4.76	10,957	1020	9,936
40	2,400	1.91	4.41	11,492	1166	10,326
45	2,700	1.77	4.07	11,823	1312	10,511
50	3,000	1.62	3.73	11,948	1458	10,490
55	3,300	1.47	3.39	11,868	1604	10,264
60	3,600	1.32	3.04	11,582	1749	9,833
65	3,900	1.27	2.93	12,022	1895	10,127
70	4,200	1.22	2.81	12,393	2041	10,352
75	4,500	1.17	2.70	12,695	2187	10,508
80	4,800	1.12	2.58	12,927	2333	10,595
85	5,100	1.07	2.47	13,091	2478	10,613
90	5,400	1.02	2.35	13,185	2624	10,561
95	5,700	0.97	2.24	13,210	2770	10,440
100	6,000	0.92	2.12	13,166	2916	10,250
105	6,300	0.87	2.01	13,052	3061	9,991
110	6,600	0.82	1.89	12,869	3207	9,662
115	6,900	0.77	1.78	12,617	3353	9,264
120	7,200	0.72	1.66	12,296	3499	8,798
180	10,800	0.50	1.15	12,666	5248	7,418
360	21,600	0.27	0.63	13,630	10496	3,133
720	43,200	0.15	0.35	15,218	20993	0
1440	86,400	0.09	0.20	17,180	41985	0

PROJECT:	**KN 24394 US20, Arco to Idaho Falls**				[Linked Data]
BASIN:	010-L				[User Input Data]
DESIGNER:	**BCC, DEA**	**REPORTS TO:**	**SW-6802-L**		[Calculated Data]
DATE:	**9/29/2025**				

Bio-Infiltration Swales

Lowpoint Swale (Priority 1):

Width (feet):	0
Length (feet):	0
Sideslope 1 (H:V):	0
Sideslope 2 (H:V):	0
Max Depth (feet):	0
Max Volume When Full (CF):	0
LP Swale Infiltration Area (SF):	0

Road Slope Swale (Priority 2):	**Roadside Slope A**	**Roadside Slope B**
Base Width (feet):	2	2
Sideslope 1: (_H:1V)	2	2
Sideslope 2: (_H:V)	4	2
Longitudinal Slope (ft/ft):	0.0093	0.0066
Determination of Max Usable Swale Length Due to Slope:		
Max Water Depth At Downstream End (feet):	*1.5*	*1.5*
Swale Volume (CF):	*605*	*682*
Length (feet):	*161*	*227*
Determination of Length of Bermed Swales:		
Swale Length (feet):	150	225
Storage Depth at U/S End (feet):	0.11	0.01
Swale Volume (CF):	604	682
Infiltration Area Per Bermed Swale (SF):	1022	1132
Number of Bermed Swales:	15	5
Total Swale Infiltration Area (SF):	15334	5659
Total Swale Volume (CF):	9053	3409
Available Length 1 (feet):	2300	1218
Proposed Length 2 (feet):	2250	1125
Difference (feet):	50	93

Total Design Storage (CF):	**12,462**	
Total Infiltration Area (SF):	20,993	
Swale Infiltration Rate (cfs):	0.486	
Total Infiltration Rate (cfs):	0.486	
Total Time to Drain (Hrs):	6.07	
Required Treatment Volume:		
Basin Imp. Area x 0.5 inches /12 (CF)	3,233	OK! (Design> Req'd)
Required Storage Volume:		
Maximum Storage From Rational Column #7 (CF):	10,613	OK! (Design> Req'd)
Target Time to Drain:		
From Design Requirements (Hrs):	72	OK! (Design<Req'd)

PROJECT:	**KN 24394 US20, Arco to Idaho Falls**				**[Linked Data]**
BASIN:	011-L				**[User Input Data]**
DESIGNER:	**BCC, DEA**	**REPORTS TO:**	**SW-6823-L**		**[Calculated Data]**
DATE:	**9/29/2025**				

Basin Data

	SF	Acre	C
Impervious Area	24,002	0.551	0.9
Pervious Area	40,374	0.927	0.2
Total Area	64,375	1.478	

Composite "C"	0.46	
Area * "C"	0.681	

			Rational Method Peak Flows (Q=C*I*A)		
Time of Concentration:	10.00	min			
25-Year Intensity	3.61	in/hr	25-year Peak	2.48	cfs
50-Year Intensity	4.16	in/hr	50-year Peak	2.86	cfs
100-year Intensity:	4.69	in/hr	100-year Peak	3.22	cfs

Selected Design Storm:	100-Year
Design Infiltration Rate (in/hr):	1.50

PROJECT:	**KN 24394 US20, Arco to Idaho Falls**			
BASIN:	011-L			
DESIGNER:	**BCC, DEA**	**REPORTS TO:**	**SW-6823-L**	
DATE:	**9/29/2025**			

[Linked Data]
[User Input Data]
[Calculated Data]

MODIFIED RATIONAL METHOD (BOWSTRING) FOR REQUIRED DETENTION STORAGE

#1 Time Inc. (min.)	#2 Time Inc. (sec.) (#1*60)	#3 Intensity (in./hr.)	#4 Q dev. (cfs) (A*C*#3)	#5 V in (cu. ft.)	#6 V out (cu. ft.) (Outf.*#2)	#7 Req. Storage (cu. ft.) (#5-#6)
10.00	600.00	4.69	3.22	2,590	114	2,476
5	300	6.77	4.61	1,854	57	1,797
10	600	4.69	3.20	2,569	114	2,455
15	900	3.64	2.48	2,738	171	2,567
20	1,200	3.16	2.16	3,026	228	2,798
25	1,500	2.69	1.83	3,119	285	2,834
30	1,800	2.21	1.51	3,017	342	2,676
35	2,100	2.06	1.40	3,236	398	2,838
40	2,400	1.91	1.30	3,394	455	2,939
45	2,700	1.77	1.20	3,492	512	2,980
50	3,000	1.62	1.10	3,529	569	2,960
55	3,300	1.47	1.00	3,505	626	2,879
60	3,600	1.32	0.90	3,421	683	2,738
65	3,900	1.27	0.87	3,551	740	2,811
70	4,200	1.22	0.83	3,660	797	2,863
75	4,500	1.17	0.80	3,749	854	2,896
80	4,800	1.12	0.76	3,818	911	2,907
85	5,100	1.07	0.73	3,866	968	2,899
90	5,400	1.02	0.69	3,894	1025	2,870
95	5,700	0.97	0.66	3,902	1082	2,820
100	6,000	0.92	0.63	3,888	1138	2,750
105	6,300	0.87	0.59	3,855	1195	2,660
110	6,600	0.82	0.56	3,801	1252	2,549
115	6,900	0.77	0.52	3,727	1309	2,417
120	7,200	0.72	0.49	3,632	1366	2,266
180	10,800	0.50	0.34	3,741	2049	1,692
360	21,600	0.27	0.18	4,026	4098	0
720	43,200	0.15	0.10	4,495	8197	0
1440	86,400	0.09	0.06	5,074	16393	0

PROJECT:	**KN 24394 US20, Arco to Idaho Falls**				[Linked Data]
BASIN:	011-L				[User Input Data]
DESIGNER:	**BCC, DEA**	**REPORTS TO:**	**SW-6823-L**		[Calculated Data]
DATE:	**9/29/2025**				

Bio-Infiltration Swales

Lowpoint Swale (Priority 1):

Width (feet):	0
Length (feet):	0
Sideslope 1 (H:V):	0
Sideslope 2 (H:V):	0
Max Depth (feet):	0
Max Volume When Full (CF):	0
LP Swale Infiltration Area (SF):	0

Road Slope Swale (Priority 2):	**Roadside Slope A**	**Roadside Slope B**
Base Width (feet):	2	2
Sideslope 1: (_H:1V)	2	2
Sideslope 2: (_H:V)	4	2
Longitudinal Slope (ft/ft):	0.0033	0.0025
Determination of Max Usable Swale Length Due to Slope:		
Max Water Depth At Downstream End (feet):	*1.5*	*1.5*
Swale Volume (CF):	*1705*	*1800*
Length (feet):	*455*	*600*
Determination of Length of Bermed Swales:		
Swale Length (feet):	450	431
Storage Depth at U/S End (feet):	0.01	0.42
Swale Volume (CF):	1704	1708
Infiltration Area Per Bermed Swale (SF):	2945	2519
Number of Bermed Swales:	1	1
Total Swale Infiltration Area (SF):	2945	2519
Total Swale Volume (CF):	1704	1708
Available Length 1 (feet):	630	431
Proposed Length 2 (feet):	450	431
Difference (feet):	180 OK! (Design> Req'd	0 No Good (Design< Storage)

Total Design Storage (CF):	**3,413**
Total Infiltration Area (SF):	5,464
Swale Infiltration Rate (cfs):	0.190
Total Infiltration Rate (cfs):	0.190
Total Time to Drain (Hrs):	4.36

Required Treatment Volume:		
Basin Imp. Area x 0.5 inches /12 (CF)	1,000	OK! (Design> Req'd)
Required Storage Volume:		
Maximum Storage From Rational Column #7 (CF):	2,980	OK! (Design> Req'd)
Target Time to Drain:		
From Design Requirements (Hrs):	72	OK! (Design<Req'd)

PROJECT:	**KN 24394 US20, Arco to Idaho Falls**				**[Linked Data]**
BASIN:	012-L				**[User Input Data]**
DESIGNER:	**BCC, DEA**	**REPORTS TO:**	**SW-6858-L**		**[Calculated Data]**
DATE:	**9/29/2025**				

Basin Data

	SF	Acre	C
Impervious Area	199,170	4.572	0.9
Pervious Area	343,975	7.897	0.2
Total Area	543,145	12.469	

Composite "C"	0.46	
Area * "C"	5.694	

			Rational Method Peak Flows (Q=C*I*A)		
Time of Concentration:	10.00	min			
25-Year Intensity	3.61	in/hr	25-year Peak	20.73	cfs
50-Year Intensity	4.16	in/hr	50-year Peak	23.89	cfs
100-year Intensity:	4.69	in/hr	100-year Peak	26.93	cfs

Selected Design Storm:	100-Year
Design Infiltration Rate (in/hr):	1.50

PROJECT:	**KN 24394 US20, Arco to Idaho Falls**			
BASIN:	012-L			
DESIGNER:	**BCC, DEA**	**REPORTS TO:**	**SW-6858-L**	
DATE:	**9/29/2025**			

[Linked Data]
[User Input Data]
[Calculated Data]

MODIFIED RATIONAL METHOD (BOWSTRING) FOR REQUIRED DETENTION STORAGE

#1 Time Inc. (min.)	#2 Time Inc. (sec.) (#1*60)	#3 Intensity (in./hr.)	#4 Q dev. (cfs) (A*C*#3)	#5 V in (cu. ft.)	#6 V out (cu. ft.) (Outf.*#2)	#7 Req. Storage (cu. ft.) (#5-#6)
10.00	600.00	4.69	26.93	21,651	913	20,738
5	300	6.77	38.55	15,498	457	15,041
10	600	4.69	26.71	21,472	913	20,559
15	900	3.64	20.73	22,883	1370	21,514
20	1,200	3.16	18.01	25,291	1826	23,465
25	1,500	2.69	15.30	26,069	2283	23,787
30	1,800	2.21	12.58	25,220	2739	22,481
35	2,100	2.06	11.74	27,049	3196	23,853
40	2,400	1.91	10.90	28,371	3652	24,719
45	2,700	1.77	10.05	29,187	4109	25,078
50	3,000	1.62	9.21	29,496	4565	24,931
55	3,300	1.47	8.36	29,298	5022	24,276
60	3,600	1.32	7.52	28,593	5478	23,115
65	3,900	1.27	7.23	29,680	5935	23,745
70	4,200	1.22	6.95	30,595	6391	24,204
75	4,500	1.17	6.66	31,340	6848	24,492
80	4,800	1.12	6.38	31,914	7304	24,610
85	5,100	1.07	6.09	32,317	7761	24,557
90	5,400	1.02	5.81	32,550	8217	24,332
95	5,700	0.97	5.52	32,611	8674	23,937
100	6,000	0.92	5.24	32,502	9130	23,372
105	6,300	0.87	4.95	32,222	9587	22,635
110	6,600	0.82	4.67	31,771	10043	21,727
115	6,900	0.77	4.38	31,149	10500	20,649
120	7,200	0.72	4.10	30,356	10956	19,400
180	10,800	0.50	2.84	31,268	16434	14,834
360	21,600	0.27	1.54	33,648	32869	779
720	43,200	0.15	0.87	37,568	65738	0
1440	86,400	0.09	0.49	42,412	131475	0

PROJECT:	**KN 24394 US20, Arco to Idaho Falls**				[Linked Data]
BASIN:	012-L				[User Input Data]
DESIGNER:	**BCC, DEA**	**REPORTS TO:**	**SW-6858-L**		[Calculated Data]
DATE:	**9/29/2025**				

Bio-Infiltration Swales

Lowpoint Swale (Priority 1):

Width (feet):	0
Length (feet):	0
Sideslope 1 (H:V):	0
Sideslope 2 (H:V):	0
Max Depth (feet):	0
Max Volume When Full (CF):	0
LP Swale Infiltration Area (SF):	0

Road Slope Swale (Priority 2):	**Roadside Slope A**	**Roadside Slope B**
Base Width (feet):	2	2
Sideslope 1: (_H:1V)	2	2
Sideslope 2: (_H:V)	4	4
Longitudinal Slope (ft/ft):	0.0192	0.0074
Determination of Max Usable Swale Length Due to Slope:		
Max Water Depth At Downstream End (feet):	*1.5*	*1.5*
Swale Volume (CF):	*293*	*760*
Length (feet):	*78*	*203*
Determination of Length of Bermed Swales:		
Swale Length (feet):	75	200
Storage Depth at U/S End (feet):	0.06	0.02
Swale Volume (CF):	293	760
Infiltration Area Per Bermed Swale (SF):	501	1312
Number of Bermed Swales:	77	4
Total Swale Infiltration Area (SF):	38577	5248
Total Swale Volume (CF):	22543	3040
Available Length 1 (feet):	5792	906
Proposed Length 2 (feet):	5775	800
Difference (feet):	17 **OK! (Design> Req'd**	106 **OK! (Design> Req'd)**

Total Design Storage (CF):	**25,584**	
Total Infiltration Area (SF):	43,825	
Swale Infiltration Rate (cfs):	1.522	
Total Infiltration Rate (cfs):	1.522	
Total Time to Drain (Hrs):	4.58	
Required Treatment Volume:		
Basin Imp. Area x 0.5 inches /12 (CF)	8,299	**OK! (Design> Req'd)**
Required Storage Volume:		
Maximum Storage From Rational Column #7 (CF):	25,078	**OK! (Design> Req'd)**
Target Time to Drain:		
From Design Requirements (Hrs):	72	**OK! (Design<Req'd)**

PROJECT:	**KN 24394 US20, Arco to Idaho Falls**				**[Linked Data]**
BASIN:	013-L				**[User Input Data]**
DESIGNER:	**BCC, DEA**	**REPORTS TO:**	**SW-6869-L**		**[Calculated Data]**
DATE:	**9/29/2025**				

Basin Data

	SF	Acre	C
Impervious Area	62,437	1.433	0.9
Pervious Area	82,832	1.902	0.2
Total Area	145,269	3.335	

Composite "C"	0.50	
Area * "C"	1.670	

			Rational Method Peak Flows (Q=C*I*A)		
Time of Concentration:	10.00	min			
25-Year Intensity	3.61	in/hr	25-year Peak	6.08	cfs
50-Year Intensity	4.16	in/hr	50-year Peak	7.01	cfs
100-year Intensity:	4.69	in/hr	100-year Peak	7.90	cfs

Selected Design Storm:	100-Year
Design Infiltration Rate (in/hr):	1.00

PROJECT:	**KN 24394 US20, Arco to Idaho Falls**			
BASIN:	013-L			
DESIGNER:	**BCC, DEA**	**REPORTS TO:**	**SW-6869-L**	
DATE:	**9/29/2025**			

[Linked Data]
[User Input Data]
[Calculated Data]

MODIFIED RATIONAL METHOD (BOWSTRING) FOR REQUIRED DETENTION STORAGE

#1 Time Inc. (min.)	#2 Time Inc. (sec.) (#1*60)	#3 Intensity (in./hr.)	#4 Q dev. (cfs) (A*C*#3)	#5 V in (cu. ft.)	#6 V out (cu. ft.) (Outf.*#2)	#7 Req. Storage (cu. ft.) (#5-#6)
10.00	600.00	4.69	7.90	6,351	192	6,159
5	300	6.77	11.31	4,546	96	4,450
10	600	4.69	7.83	6,298	192	6,107
15	900	3.64	6.08	6,712	288	6,425
20	1,200	3.16	5.28	7,418	384	7,035
25	1,500	2.69	4.49	7,647	479	7,167
30	1,800	2.21	3.69	7,398	575	6,822
35	2,100	2.06	3.44	7,934	671	7,263
40	2,400	1.91	3.20	8,322	767	7,555
45	2,700	1.77	2.95	8,561	863	7,698
50	3,000	1.62	2.70	8,652	959	7,693
55	3,300	1.47	2.45	8,594	1055	7,539
60	3,600	1.32	2.20	8,387	1151	7,237
65	3,900	1.27	2.12	8,706	1247	7,459
70	4,200	1.22	2.04	8,974	1342	7,632
75	4,500	1.17	1.95	9,193	1438	7,755
80	4,800	1.12	1.87	9,361	1534	7,827
85	5,100	1.07	1.79	9,480	1630	7,850
90	5,400	1.02	1.70	9,548	1726	7,822
95	5,700	0.97	1.62	9,566	1822	7,744
100	6,000	0.92	1.54	9,534	1918	7,616
105	6,300	0.87	1.45	9,452	2014	7,438
110	6,600	0.82	1.37	9,319	2110	7,210
115	6,900	0.77	1.29	9,137	2205	6,931
120	7,200	0.72	1.20	8,904	2301	6,603
180	10,800	0.50	0.83	9,172	3452	5,720
360	21,600	0.27	0.45	9,870	6904	2,966
720	43,200	0.15	0.25	11,020	13808	0
1440	86,400	0.09	0.14	12,441	27616	0

PROJECT:	**KN 24394 US20, Arco to Idaho Falls**				[Linked Data]
BASIN:	013-L				[User Input Data]
DESIGNER:	**BCC, DEA**	**REPORTS TO:**	**SW-6869-L**		[Calculated Data]
DATE:	**9/29/2025**				

Bio-Infiltration Swales

Lowpoint Swale (Priority 1):

Width (feet):	0
Length (feet):	0
Sideslope 1 (H:V):	0
Sideslope 2 (H:V):	0
Max Depth (feet):	0
Max Volume When Full (CF):	0
LP Swale Infiltration Area (SF):	0

Road Slope Swale (Priority 2):	**Roadside Slope A**	**Roadside Slope B**
Base Width (feet):	2	2
Sideslope 1: (_H:1V)	2	2
Sideslope 2: (_H:V)	4	4
Longitudinal Slope (ft/ft):	0.0052	0.0028
Determination of Max Usable Swale Length Due to Slope:		
Max Water Depth At Downstream End (feet):	*1.5*	*1.5*
Swale Volume (CF):	*1082*	*2009*
Length (feet):	*288*	*536*
Determination of Length of Bermed Swales:		
Swale Length (feet):	250	425
Storage Depth at U/S End (feet):	0.20	0.31
Swale Volume (CF):	1073	1964
Infiltration Area Per Bermed Swale (SF):	1775	3158
Number of Bermed Swales:	6	1
Total Swale Infiltration Area (SF):	10650	3158
Total Swale Volume (CF):	6435	1964
Available Length 1 (feet):	1633	428
Proposed Length 2 (feet):	1500	425
Difference (feet):	133	3

OK! (Design> Req'd

OK! (Design> Req'd)

Total Design Storage (CF):	**8,399**
Total Infiltration Area (SF):	13,808
Swale Infiltration Rate (cfs):	0.320
Total Infiltration Rate (cfs):	0.320
Total Time to Drain (Hrs):	6.82
Required Treatment Volume:	
Basin Imp. Area x 0.5 inches /12 (CF)	2,602 OK! (Design> Req'd)
Required Storage Volume:	
Maximum Storage From Rational Column #7 (CF):	7,850 OK! (Design> Req'd)
Target Time to Drain:	
From Design Requirements (Hrs):	72 OK! (Design<Req'd)

PROJECT:	**KN 24394 US20, Arco to Idaho Falls**				**[Linked Data]**
BASIN:	014-L				**[User Input Data]**
DESIGNER:	**BCC, DEA**	**REPORTS TO:**	**SW-6936-L**		**[Calculated Data]**
DATE:	**9/29/2025**				

Basin Data

	SF	Acre	C
Impervious Area	55,786	1.281	0.9
Pervious Area	80,507	1.848	0.2
Total Area	136,293	3.129	

Composite "C"	0.49	
Area * "C"	1.522	

			Rational Method Peak Flows (Q=C*I*A)		
Time of Concentration:	10.00	min			
25-Year Intensity	3.61	in/hr	25-year Peak	5.54	cfs
50-Year Intensity	4.16	in/hr	50-year Peak	6.39	cfs
100-year Intensity:	4.69	in/hr	100-year Peak	7.20	cfs

Selected Design Storm:	100-Year
Design Infiltration Rate (in/hr):	1.00

PROJECT:	**KN 24394 US20, Arco to Idaho Falls**			
BASIN:	014-L			
DESIGNER:	**BCC, DEA**	**REPORTS TO:**	**SW-6936-L**	
DATE:	**9/29/2025**			

[Linked Data]
[User Input Data]
[Calculated Data]

MODIFIED RATIONAL METHOD (BOWSTRING) FOR REQUIRED DETENTION STORAGE

#1 Time Inc. (min.)	#2 Time Inc. (sec.) (#1*60)	#3 Intensity (in./hr.)	#4 Q dev. (cfs) (A*C*#3)	#5 V in (cu. ft.)	#6 V out (cu. ft.) (Outf.*#2)	#7 Req. Storage (cu. ft.) (#5-#6)
10.00	600.00	4.69	7.20	5,788	182	5,606
5	300	6.77	10.31	4,143	91	4,052
10	600	4.69	7.14	5,740	182	5,558
15	900	3.64	5.54	6,117	273	5,844
20	1,200	3.16	4.82	6,761	364	6,397
25	1,500	2.69	4.09	6,969	455	6,514
30	1,800	2.21	3.36	6,742	546	6,196
35	2,100	2.06	3.14	7,231	636	6,594
40	2,400	1.91	2.91	7,584	727	6,857
45	2,700	1.77	2.69	7,802	818	6,984
50	3,000	1.62	2.46	7,885	909	6,976
55	3,300	1.47	2.24	7,832	1000	6,832
60	3,600	1.32	2.01	7,644	1091	6,553
65	3,900	1.27	1.93	7,934	1182	6,752
70	4,200	1.22	1.86	8,179	1273	6,906
75	4,500	1.17	1.78	8,378	1364	7,014
80	4,800	1.12	1.70	8,531	1455	7,077
85	5,100	1.07	1.63	8,639	1546	7,094
90	5,400	1.02	1.55	8,701	1637	7,065
95	5,700	0.97	1.48	8,718	1727	6,990
100	6,000	0.92	1.40	8,688	1818	6,870
105	6,300	0.87	1.32	8,614	1909	6,704
110	6,600	0.82	1.25	8,493	2000	6,493
115	6,900	0.77	1.17	8,327	2091	6,236
120	7,200	0.72	1.10	8,115	2182	5,933
180	10,800	0.50	0.76	8,359	3273	5,086
360	21,600	0.27	0.41	8,995	6546	2,449
720	43,200	0.15	0.23	10,043	13092	0
1440	86,400	0.09	0.13	11,338	26185	0

PROJECT:	**KN 24394 US20, Arco to Idaho Falls**				[Linked Data]
BASIN:	014-L				[User Input Data]
DESIGNER:	**BCC, DEA**	**REPORTS TO:**	**SW-6936-L**		[Calculated Data]
DATE:	**9/29/2025**				

Bio-Infiltration Swales

Lowpoint Swale (Priority 1):

Width (feet):	0
Length (feet):	0
Sideslope 1 (H:V):	0
Sideslope 2 (H:V):	0
Max Depth (feet):	0
Max Volume When Full (CF):	0
LP Swale Infiltration Area (SF):	0

Road Slope Swale (Priority 2):	**Roadside Slope A**	**Roadside Slope B**
Base Width (feet):	2	2
Sideslope 1: (_H:1V)	2	2
Sideslope 2: (_H:V)	4	2
Longitudinal Slope (ft/ft):	0.0065	0.0000
Determination of Max Usable Swale Length Due to Slope:		
Max Water Depth At Downstream End (feet):	*1.5*	*1.5*
Swale Volume (CF):	*865*	*0*
Length (feet):	*231*	*0*
Determination of Length of Bermed Swales:		
Swale Length (feet):	115	0
Storage Depth at U/S End (feet):	0.75	1.50
Swale Volume (CF):	713	0
Infiltration Area Per Bermed Swale (SF):	1007	0
Number of Bermed Swales:	13	0
Total Swale Infiltration Area (SF):	13092	0
Total Swale Volume (CF):	9265	0
Available Length 1 (feet):	1496	0
Proposed Length 2 (feet):	1495	0
Difference (feet):	1	0

OK! (Design> Req'd

No Good (Design< Storage)

Total Design Storage (CF):	**9,265**
Total Infiltration Area (SF):	13,092
Swale Infiltration Rate (cfs):	0.303
Total Infiltration Rate (cfs):	0.303
Total Time to Drain (Hrs):	6.50

Required Treatment Volume:

Basin Imp. Area x 0.5 inches /12 (CF): 2,324 — OK! (Design> Req'd)

Required Storage Volume:

Maximum Storage From Rational Column #7 (CF): 7,094 — OK! (Design> Req'd)

Target Time to Drain:

From Design Requirements (Hrs): 72 — OK! (Design<Req'd)

PROJECT:	**KN 24394 US20, Arco to Idaho Falls**				**[Linked Data]**
BASIN:	001-M				**[User Input Data]**
DESIGNER:	**BCC, DEA**	**REPORTS TO:**	**SW-6423-M**		**[Calculated Data]**
DATE:	**9/29/2025**				

Basin Data

	SF	Acre	C
Impervious Area	68,624	1.575	0.9
Pervious Area	115,803	2.658	0.2
Total Area	184,427	4.234	

Composite "C"	0.46
Area * "C"	1.950

			Rational Method Peak Flows (Q=C*I*A)		
Time of Concentration:	10.00	min			
25-Year Intensity	3.61	in/hr	25-year Peak	7.10	cfs
50-Year Intensity	4.16	in/hr	50-year Peak	8.18	cfs
100-year Intensity:	4.69	in/hr	100-year Peak	9.22	cfs

Selected Design Storm:	100-Year
Design Infiltration Rate (in/hr):	1.00

PROJECT:	**KN 24394 US20, Arco to Idaho Falls**			
BASIN:	001-M			
DESIGNER:	**BCC, DEA**	**REPORTS TO:**	**SW-6423-M**	
DATE:	**9/29/2025**			

[Linked Data]
[User Input Data]
[Calculated Data]

MODIFIED RATIONAL METHOD (BOWSTRING) FOR REQUIRED DETENTION STORAGE

#1 Time Inc. (min.)	#2 Time Inc. (sec.) (#1*60)	#3 Intensity (in./hr.)	#4 Q dev. (cfs) (A*C*#3)	#5 V in (cu. ft.)	#6 V out (cu. ft.) (Outf.*#2)	#7 Req. Storage (cu. ft.) (#5-#6)
10.00	600.00	4.69	9.22	7,413	306	7,106
5	300	6.77	13.20	5,306	153	5,153
10	600	4.69	9.14	7,351	306	7,045
15	900	3.64	7.10	7,834	460	7,375
20	1,200	3.16	6.17	8,659	613	8,046
25	1,500	2.69	5.24	8,925	766	8,159
30	1,800	2.21	4.31	8,634	919	7,715
35	2,100	2.06	4.02	9,261	1072	8,188
40	2,400	1.91	3.73	9,713	1225	8,488
45	2,700	1.77	3.44	9,993	1379	8,614
50	3,000	1.62	3.15	10,098	1532	8,567
55	3,300	1.47	2.86	10,031	1685	8,346
60	3,600	1.32	2.57	9,789	1838	7,951
65	3,900	1.27	2.48	10,161	1991	8,170
70	4,200	1.22	2.38	10,475	2144	8,330
75	4,500	1.17	2.28	10,730	2298	8,432
80	4,800	1.12	2.18	10,926	2451	8,476
85	5,100	1.07	2.09	11,064	2604	8,460
90	5,400	1.02	1.99	11,144	2757	8,387
95	5,700	0.97	1.89	11,165	2910	8,255
100	6,000	0.92	1.79	11,127	3063	8,064
105	6,300	0.87	1.70	11,031	3217	7,815
110	6,600	0.82	1.60	10,877	3370	7,507
115	6,900	0.77	1.50	10,664	3523	7,141
120	7,200	0.72	1.40	10,393	3676	6,717
180	10,800	0.50	0.97	10,705	5514	5,191
360	21,600	0.27	0.53	11,520	11028	492
720	43,200	0.15	0.30	12,862	22056	0
1440	86,400	0.09	0.17	14,520	44112	0

PROJECT:	**KN 24394 US20, Arco to Idaho Falls**				[Linked Data]
BASIN:	001-M				[User Input Data]
DESIGNER:	**BCC, DEA**	**REPORTS TO:**	**SW-6423-M**		[Calculated Data]
DATE:	**9/29/2025**				

Bio-Infiltration Swales

Lowpoint Swale (Priority 1):

Width (feet):	0
Length (feet):	0
Sideslope 1 (H:V):	0
Sideslope 2 (H:V):	0
Max Depth (feet):	0
Max Volume When Full (CF):	0
LP Swale Infiltration Area (SF):	0

Road Slope Swale (Priority 2):	**Roadside Slope A**	**Roadside Slope B**
Base Width (feet):	48	48
Sideslope 1: (_H:1V)	6	6
Sideslope 2: (_H:V)	6	6
Longitudinal Slope (ft/ft):	0.0038	0.0086

Determination of Max Usable Swale Length Due to Slope:

Max Water Depth At Downstream End (feet):	*1.0*	*1.0*
Swale Volume (CF):	*6842*	*3023*
Length (feet):	*263*	*116*

Determination of Length of Bermed Swales:

Swale Length (feet):	200	100
Storage Depth at U/S End (feet):	0.24	0.14
Swale Volume (CF):	6471	2968
Infiltration Area Per Bermed Swale (SF):	11088	5484
Number of Bermed Swales:	1	2
Total Swale Infiltration Area (SF):	11088	10968
Total Swale Volume (CF):	6471	5936
Available Length 1 (feet):	1465	4907
Proposed Length 2 (feet):	200	200
Difference (feet):	1265 OK! (Design> Req'd	4707 OK! (Design> Req'd)

Total Design Storage (CF):	**12,407**
Total Infiltration Area (SF):	22,056
Swale Infiltration Rate (cfs):	0.511
Total Infiltration Rate (cfs):	0.511
Total Time to Drain (Hrs):	4.69

Required Treatment Volume:		
Basin Imp. Area x 0.5 inches /12 (CF)	2,859	OK! (Design> Req'd)
Required Storage Volume:		
Maximum Storage From Rational Column #7 (CF):	8,614	OK! (Design> Req'd)
Target Time to Drain:		
From Design Requirements (Hrs):	72	OK! (Design<Req'd)

PROJECT:	**KN 24394 US20, Arco to Idaho Falls**				**[Linked Data]**
BASIN:	002-M				**[User Input Data]**
DESIGNER:	**BCC, DEA**	**REPORTS TO:**	**SW-6488-M**		**[Calculated Data]**
DATE:	**9/29/2025**				

Basin Data

	SF	Acre	C
Impervious Area	319,872	7.343	0.9
Pervious Area	1,117,313	25.650	0.2
Total Area	1,437,185	32.993	

Composite "C"	0.36	
Area * "C"	11.739	

			Rational Method Peak Flows (Q=C*I*A)		
Time of Concentration:	10.00	min			
25-Year Intensity	3.61	in/hr	25-year Peak	42.73	cfs
50-Year Intensity	4.16	in/hr	50-year Peak	49.24	cfs
100-year Intensity:	4.69	in/hr	100-year Peak	55.51	cfs

Selected Design Storm:	100-Year
Design Infiltration Rate (in/hr):	1.00

PROJECT:	**KN 24394 US20, Arco to Idaho Falls**			
BASIN:	002-M			
DESIGNER:	**BCC, DEA**	**REPORTS TO:**	**SW-6488-M**	
DATE:	**9/29/2025**			

[Linked Data]
[User Input Data]
[Calculated Data]

MODIFIED RATIONAL METHOD (BOWSTRING) FOR REQUIRED DETENTION STORAGE

#1 Time Inc. (min.)	#2 Time Inc. (sec.) (#1*60)	#3 Intensity (in./hr.)	#4 Q dev. (cfs) (A*C*#3)	#5 V in (cu. ft.)	#6 V out (cu. ft.) (Outf.*#2)	#7 Req. Storage (cu. ft.) (#5-#6)
10.00	600.00	4.69	55.51	44,634	1561	43,072
5	300	6.77	79.47	31,948	781	31,167
10	600	4.69	55.06	44,265	1561	42,703
15	900	3.64	42.73	47,174	2342	44,832
20	1,200	3.16	37.13	52,136	3123	49,014
25	1,500	2.69	31.54	53,742	3903	49,838
30	1,800	2.21	25.94	51,990	4684	47,306
35	2,100	2.06	24.20	55,761	5465	50,296
40	2,400	1.91	22.46	58,487	6245	52,242
45	2,700	1.77	20.72	60,169	7026	53,143
50	3,000	1.62	18.98	60,805	7806	52,999
55	3,300	1.47	17.24	60,397	8587	51,810
60	3,600	1.32	15.50	58,944	9368	49,577
65	3,900	1.27	14.91	61,184	10148	51,036
70	4,200	1.22	14.32	63,072	10929	52,143
75	4,500	1.17	13.73	64,607	11710	52,898
80	4,800	1.12	13.15	65,791	12490	53,300
85	5,100	1.07	12.56	66,622	13271	53,351
90	5,400	1.02	11.97	67,101	14052	53,049
95	5,700	0.97	11.39	67,227	14832	52,395
100	6,000	0.92	10.80	67,002	15613	51,389
105	6,300	0.87	10.21	66,424	16394	50,031
110	6,600	0.82	9.63	65,495	17174	48,321
115	6,900	0.77	9.04	64,213	17955	46,258
120	7,200	0.72	8.45	62,579	18735	43,843
180	10,800	0.50	5.86	64,458	28103	36,355
360	21,600	0.27	3.18	69,364	56206	13,158
720	43,200	0.15	1.78	77,446	112413	0
1440	86,400	0.09	1.01	87,431	224825	0

PROJECT:	**KN 24394 US20, Arco to Idaho Falls**				[Linked Data]
BASIN:	002-M				[User Input Data]
DESIGNER:	**BCC, DEA**	**REPORTS TO:**	**SW-6488-M**		[Calculated Data]
DATE:	**9/29/2025**				

Bio-Infiltration Swales

Lowpoint Swale (Priority 1):

Width (feet):	0
Length (feet):	0
Sideslope 1 (H:V):	0
Sideslope 2 (H:V):	0
Max Depth (feet):	0
Max Volume When Full (CF):	0
LP Swale Infiltration Area (SF):	0

Road Slope Swale (Priority 2):	**Roadside Slope A**	**Roadside Slope B**
Base Width (feet):	86	86
Sideslope 1: (_H:1V)	6	6
Sideslope 2: (_H:V)	6	6
Longitudinal Slope (ft/ft):	0.0073	0.0033
Determination of Max Usable Swale Length Due to Slope:		
Max Water Depth At Downstream End (feet):	*1.0*	*1.0*
Swale Volume (CF):	*6164*	*13636*
Length (feet):	*137*	*303*
Determination of Length of Bermed Swales:		
Swale Length (feet):	125	345
Storage Depth at U/S End (feet):	0.09	-0.14
Swale Volume (CF):	6119	13388
Infiltration Area Per Bermed Swale (SF):	11566	31453
Number of Bermed Swales:	7	1
Total Swale Infiltration Area (SF):	80959	31453
Total Swale Volume (CF):	42834	13388
Available Length 1 (feet):	3704	878
Proposed Length 2 (feet):	875	345
Difference (feet):	2829 **OK! (Design> Req'd**	533 **OK! (Design> Req'd)**

Total Design Storage (CF):	**56,222**
Total Infiltration Area (SF):	112,413
Swale Infiltration Rate (cfs):	2.602
Total Infiltration Rate (cfs):	2.602
Total Time to Drain (Hrs):	5.70
Required Treatment Volume:	
Basin Imp. Area x 0.5 inches /12 (CF)	13,328 **OK! (Design> Req'd)**
Required Storage Volume:	
Maximum Storage From Rational Column #7 (CF):	53,351 **OK! (Design> Req'd)**
Target Time to Drain:	
From Design Requirements (Hrs):	72 **OK! (Design<Req'd)**

PROJECT:	**KN 24394 US20, Arco to Idaho Falls**				**[Linked Data]**
BASIN:	003.1-M				**[User Input Data]**
DESIGNER:	**BCC, DEA**	**REPORTS TO:**	**SW-6534-M**		**[Calculated Data]**
DATE:	**9/29/2025**				

Basin Data

	SF	Acre	C
Impervious Area	140,138	3.217	0.9
Pervious Area	594,580	13.650	0.2
Total Area	734,719	16.867	

Composite "C"	0.33	
Area * "C"	5.625	

			Rational Method Peak Flows (Q=C*I*A)		
Time of Concentration:	10.00	min			
25-Year Intensity	3.61	in/hr	25-year Peak	20.48	cfs
50-Year Intensity	4.16	in/hr	50-year Peak	23.60	cfs
100-year Intensity:	4.69	in/hr	100-year Peak	26.60	cfs

Selected Design Storm:	100-Year
Design Infiltration Rate (in/hr):	1.00

PROJECT:	**KN 24394 US20, Arco to Idaho Falls**			
BASIN:	003.1-M			
DESIGNER:	**BCC, DEA**	**REPORTS TO:**	**SW-6534-M**	
DATE:	**9/29/2025**			

[Linked Data]
[User Input Data]
[Calculated Data]

MODIFIED RATIONAL METHOD (BOWSTRING) FOR REQUIRED DETENTION STORAGE

#1 Time Inc. (min.)	#2 Time Inc. (sec.) (#1*60)	#3 Intensity (in./hr.)	#4 Q dev. (cfs) (A*C*#3)	#5 V in (cu. ft.)	#6 V out (cu. ft.) (Outf.*#2)	#7 Req. Storage (cu. ft.) (#5-#6)
10.00	600.00	4.69	26.60	21,389	884	20,504
5	300	6.77	38.08	15,310	442	14,868
10	600	4.69	26.38	21,212	884	20,328
15	900	3.64	20.48	22,606	1326	21,280
20	1,200	3.16	17.79	24,984	1768	23,216
25	1,500	2.69	15.11	25,753	2211	23,543
30	1,800	2.21	12.43	24,914	2653	22,261
35	2,100	2.06	11.60	26,721	3095	23,626
40	2,400	1.91	10.76	28,027	3537	24,491
45	2,700	1.77	9.93	28,833	3979	24,854
50	3,000	1.62	9.09	29,138	4421	24,717
55	3,300	1.47	8.26	28,943	4863	24,080
60	3,600	1.32	7.43	28,247	5305	22,941
65	3,900	1.27	7.14	29,320	5747	23,572
70	4,200	1.22	6.86	30,224	6189	24,035
75	4,500	1.17	6.58	30,960	6632	24,329
80	4,800	1.12	6.30	31,527	7074	24,454
85	5,100	1.07	6.02	31,925	7516	24,410
90	5,400	1.02	5.74	32,155	7958	24,197
95	5,700	0.97	5.46	32,216	8400	23,816
100	6,000	0.92	5.18	32,108	8842	23,266
105	6,300	0.87	4.89	31,831	9284	22,547
110	6,600	0.82	4.61	31,385	9726	21,659
115	6,900	0.77	4.33	30,771	10168	20,603
120	7,200	0.72	4.05	29,988	10610	19,378
180	10,800	0.50	2.81	30,889	15916	14,973
360	21,600	0.27	1.52	33,240	31831	1,408
720	43,200	0.15	0.86	37,113	63663	0
1440	86,400	0.09	0.48	41,897	127326	0

PROJECT:	**KN 24394 US20, Arco to Idaho Falls**				[Linked Data]
BASIN:	003.1-M				[User Input Data]
DESIGNER:	**BCC, DEA**	**REPORTS TO:**	**SW-6534-M**		[Calculated Data]
DATE:	**9/29/2025**				

Bio-Infiltration Swales

Lowpoint Swale (Priority 1):

Width (feet):	0
Length (feet):	0
Sideslope 1 (H:V):	0
Sideslope 2 (H:V):	0
Max Depth (feet):	0
Max Volume When Full (CF):	0
LP Swale Infiltration Area (SF):	0

Road Slope Swale (Priority 2):	**Roadside Slope A**	**Roadside Slope B**
Base Width (feet):	77	77
Sideslope 1: (_H:1V)	6	6
Sideslope 2: (_H:V)	6	6
Longitudinal Slope (ft/ft):	0.0053	NA
Determination of Max Usable Swale Length Due to Slope:		
Max Water Depth At Downstream End (feet):	*1.0*	*1.5*
Swale Volume (CF):	*7642*	*0*
Length (feet):	*189*	*0*
Determination of Length of Bermed Swales:		
Swale Length (feet):	192	65
Storage Depth at U/S End (feet):	-0.02	#VALUE!
Swale Volume (CF):	7639	0
Infiltration Area Per Bermed Swale (SF):	15916	0
Number of Bermed Swales:	4	87
Total Swale Infiltration Area (SF):	63663	0
Total Swale Volume (CF):	30557	0
Available Length 1 (feet):	2567	258
Proposed Length 2 (feet):	768	5655
Difference (feet):	1799	-5397

OK! (Design> Req'd

No Good (Design< Storage)

Total Design Storage (CF):	**30,557**
Total Infiltration Area (SF):	63,663
Swale Infiltration Rate (cfs):	1.474
Total Infiltration Rate (cfs):	1.474
Total Time to Drain (Hrs):	4.68

Required Treatment Volume:

Basin Imp. Area x 0.5 inches /12 (CF): 5,839 — OK! (Design> Req'd)

Required Storage Volume:

Maximum Storage From Rational Column #7 (CF): 24,854 — OK! (Design> Req'd)

Target Time to Drain:

From Design Requirements (Hrs): 72 — OK! (Design<Req'd)

PROJECT:	**KN 24394 US20, Arco to Idaho Falls**				**[Linked Data]**
BASIN:	003.2-M				**[User Input Data]**
DESIGNER:	**BCC, DEA**	**REPORTS TO:**	**SW-6577-M**		**[Calculated Data]**
DATE:	**9/29/2025**				

Basin Data

	SF	Acre	C
Impervious Area	376,097	8.634	0.9
Pervious Area	1,494,327	34.305	0.2
Total Area	1,870,424	42.939	

Composite "C"	0.34	
Area * "C"	14.632	

			Rational Method Peak Flows (Q=C*I*A)		
Time of Concentration:	10.00	min			
25-Year Intensity	3.61	in/hr	25-year Peak	53.26	cfs
50-Year Intensity	4.16	in/hr	50-year Peak	61.37	cfs
100-year Intensity:	4.69	in/hr	100-year Peak	69.19	cfs

Selected Design Storm:	100-Year
Design Infiltration Rate (in/hr):	1.00

PROJECT:	**KN 24394 US20, Arco to Idaho Falls**			
BASIN:	003.2-M			
DESIGNER:	**BCC, DEA**	**REPORTS TO:**	**SW-6577-M**	
DATE:	**9/29/2025**			

[Linked Data]
[User Input Data]
[Calculated Data]

MODIFIED RATIONAL METHOD (BOWSTRING) FOR REQUIRED DETENTION STORAGE

#1 Time Inc. (min.)	#2 Time Inc. (sec.) (#1*60)	#3 Intensity (in./hr.)	#4 Q dev. (cfs) (A*C*#3)	#5 V in (cu. ft.)	#6 V out (cu. ft.) (Outf.*#2)	#7 Req. Storage (cu. ft.) (#5-#6)
10.00	600.00	4.69	69.19	55,632	1476	54,156
5	300	6.77	99.06	39,820	738	39,082
10	600	4.69	68.62	55,172	1476	53,696
15	900	3.64	53.26	58,798	2214	56,584
20	1,200	3.16	46.28	64,984	2953	62,031
25	1,500	2.69	39.31	66,985	3691	63,294
30	1,800	2.21	32.34	64,801	4429	60,372
35	2,100	2.06	30.17	69,501	5167	64,334
40	2,400	1.91	28.00	72,899	5905	66,994
45	2,700	1.77	25.82	74,995	6643	68,352
50	3,000	1.62	23.65	75,789	7381	68,407
55	3,300	1.47	21.48	75,280	8120	67,161
60	3,600	1.32	19.31	73,469	8858	64,612
65	3,900	1.27	18.58	76,261	9596	66,665
70	4,200	1.22	17.85	78,614	10334	68,280
75	4,500	1.17	17.12	80,528	11072	69,456
80	4,800	1.12	16.39	82,002	11810	70,192
85	5,100	1.07	15.66	83,038	12548	70,490
90	5,400	1.02	14.92	83,635	13286	70,349
95	5,700	0.97	14.19	83,793	14025	69,769
100	6,000	0.92	13.46	83,512	14763	68,750
105	6,300	0.87	12.73	82,793	15501	67,292
110	6,600	0.82	12.00	81,634	16239	65,395
115	6,900	0.77	11.27	80,036	16977	63,059
120	7,200	0.72	10.53	77,999	17715	60,284
180	10,800	0.50	7.30	80,342	26573	53,769
360	21,600	0.27	3.97	86,456	53146	33,310
720	43,200	0.15	2.22	96,531	106292	0
1440	86,400	0.09	1.26	108,975	212584	0

PROJECT:	**KN 24394 US20, Arco to Idaho Falls**				[Linked Data]
BASIN:	003.2-M				[User Input Data]
DESIGNER:	**BCC, DEA**	**REPORTS TO:**	**SW-6577-M**		[Calculated Data]
DATE:	**9/29/2025**				

Bio-Infiltration Swales

Lowpoint Swale (Priority 1):

Width (feet):	0
Length (feet):	0
Sideslope 1 (H:V):	0
Sideslope 2 (H:V):	0
Max Depth (feet):	0
Max Volume When Full (CF):	0
LP Swale Infiltration Area (SF):	0

Road Slope Swale (Priority 2):	**Roadside Slope A**	**Roadside Slope B**
Base Width (feet):	73	73
Sideslope 1: (_H:1V)	6	6
Sideslope 2: (_H:V)	6	6
Longitudinal Slope (ft/ft):	0.0083	0.0083
Determination of Max Usable Swale Length Due to Slope:		
Max Water Depth At Downstream End (feet):	*1.0*	*1.0*
Swale Volume (CF):	*4639*	*4639*
Length (feet):	*120*	*120*
Determination of Length of Bermed Swales:		
Swale Length (feet):	65	65
Storage Depth at U/S End (feet):	0.46	0.46
Swale Volume (CF):	3682	3682
Infiltration Area Per Bermed Swale (SF):	5315	5315
Number of Bermed Swales:	10	10
Total Swale Infiltration Area (SF):	53146	53146
Total Swale Volume (CF):	36825	36825
Available Length 1 (feet):	6564	2758
Proposed Length 2 (feet):	650	650
Difference (feet):	5914 **OK! (Design> Req'd**	2108 **OK! (Design> Req'd)**

Total Design Storage (CF):	**73,649**
Total Infiltration Area (SF):	106,292
Swale Infiltration Rate (cfs):	2.460
Total Infiltration Rate (cfs):	2.460
Total Time to Drain (Hrs):	7.96
Required Treatment Volume:	
Basin Imp. Area x 0.5 inches /12 (CF)	15,671 **OK! (Design> Req'd)**
Required Storage Volume:	
Maximum Storage From Rational Column #7 (CF):	70,490 **OK! (Design> Req'd)**
Target Time to Drain:	
From Design Requirements (Hrs):	72 **OK! (Design<Req'd)**

PROJECT:	**KN 24394 US20, Arco to Idaho Falls**				**[Linked Data]**
BASIN:	004-M				**[User Input Data]**
DESIGNER:	**BCC, DEA**	**REPORTS TO:**	**SW-6690-M**		**[Calculated Data]**
DATE:	**9/29/2025**				

Basin Data

	SF	Acre	C
Impervious Area	137,180	3.149	0.9
Pervious Area	599,945	13.773	0.2
Total Area	737,125	16.922	

Composite "C"	0.33
Area * "C"	5.589

			Rational Method Peak Flows (Q=C*I*A)		
Time of Concentration:	10.00	min			
25-Year Intensity	3.61	in/hr	25-year Peak	20.34	cfs
50-Year Intensity	4.16	in/hr	50-year Peak	23.44	cfs
100-year Intensity:	4.69	in/hr	100-year Peak	26.43	cfs

Selected Design Storm:	100-Year
Design Infiltration Rate (in/hr):	1.00

PROJECT:	**KN 24394 US20, Arco to Idaho Falls**			
BASIN:	004-M			
DESIGNER:	**BCC, DEA**	**REPORTS TO:**	**SW-6690-M**	
DATE:	**9/29/2025**			

[Linked Data]
[User Input Data]
[Calculated Data]

MODIFIED RATIONAL METHOD (BOWSTRING) FOR REQUIRED DETENTION STORAGE

#1 Time Inc. (min.)	#2 Time Inc. (sec.) (#1*60)	#3 Intensity (in./hr.)	#4 Q dev. (cfs) (A*C*#3)	#5 V in (cu. ft.)	#6 V out (cu. ft.) (Outf.*#2)	#7 Req. Storage (cu. ft.) (#5-#6)
10.00	600.00	4.69	26.43	21,250	929	20,320
5	300	6.77	37.84	15,210	465	14,746
10	600	4.69	26.21	21,074	929	20,145
15	900	3.64	20.34	22,459	1394	21,065
20	1,200	3.16	17.68	24,822	1859	22,963
25	1,500	2.69	15.02	25,586	2324	23,263
30	1,800	2.21	12.35	24,752	2788	21,964
35	2,100	2.06	11.52	26,548	3253	23,295
40	2,400	1.91	10.69	27,845	3718	24,128
45	2,700	1.77	9.86	28,646	4182	24,464
50	3,000	1.62	9.04	28,949	4647	24,302
55	3,300	1.47	8.21	28,755	5112	23,643
60	3,600	1.32	7.38	28,063	5576	22,487
65	3,900	1.27	7.10	29,130	6041	23,088
70	4,200	1.22	6.82	30,028	6506	23,522
75	4,500	1.17	6.54	30,759	6971	23,789
80	4,800	1.12	6.26	31,323	7435	23,887
85	5,100	1.07	5.98	31,718	7900	23,818
90	5,400	1.02	5.70	31,946	8365	23,582
95	5,700	0.97	5.42	32,007	8829	23,177
100	6,000	0.92	5.14	31,899	9294	22,605
105	6,300	0.87	4.86	31,624	9759	21,866
110	6,600	0.82	4.58	31,182	10224	20,958
115	6,900	0.77	4.30	30,572	10688	19,883
120	7,200	0.72	4.02	29,794	11153	18,641
180	10,800	0.50	2.79	30,688	16729	13,959
360	21,600	0.27	1.51	33,024	33459	0
720	43,200	0.15	0.85	36,872	66918	0
1440	86,400	0.09	0.48	41,626	133836	0

PROJECT:	**KN 24394 US20, Arco to Idaho Falls**				[Linked Data]
BASIN:	004-M				[User Input Data]
DESIGNER:	**BCC, DEA**	**REPORTS TO:**	**SW-6690-M**		[Calculated Data]
DATE:	**9/29/2025**				

Bio-Infiltration Swales

Lowpoint Swale (Priority 1):

Width (feet):	0
Length (feet):	0
Sideslope 1 (H:V):	0
Sideslope 2 (H:V):	0
Max Depth (feet):	0
Max Volume When Full (CF):	0
LP Swale Infiltration Area (SF):	0

Road Slope Swale (Priority 2):	**Roadside Slope A**	**Roadside Slope B**
Base Width (feet):	78	78
Sideslope 1: (_H:1V)	6	6
Sideslope 2: (_H:V)	6	6
Longitudinal Slope (ft/ft):	0.0080	0.0036
Determination of Max Usable Swale Length Due to Slope:		
Max Water Depth At Downstream End (feet):	*1.0*	*1.0*
Swale Volume (CF):	*5125*	*11389*
Length (feet):	*125*	*278*
Determination of Length of Bermed Swales:		
Swale Length (feet):	128	270
Storage Depth at U/S End (feet):	-0.02	0.03
Swale Volume (CF):	5122	11380
Infiltration Area Per Bermed Swale (SF):	10734	22725
Number of Bermed Swales:	2	2
Total Swale Infiltration Area (SF):	21467	45451
Total Swale Volume (CF):	10244	22761
Available Length 1 (feet):	4813	2473
Proposed Length 2 (feet):	256	540
Difference (feet):	4557 **OK! (Design> Req'd**	1933 **OK! (Design> Req'd)**

Total Design Storage (CF):	**33,005**
Total Infiltration Area (SF):	66,918
Swale Infiltration Rate (cfs):	1.549
Total Infiltration Rate (cfs):	1.549
Total Time to Drain (Hrs):	4.39

Required Treatment Volume:		
Basin Imp. Area x 0.5 inches /12 (CF)	5,716	**OK! (Design> Req'd)**
Required Storage Volume:		
Maximum Storage From Rational Column #7 (CF):	24,464	**OK! (Design> Req'd)**
Target Time to Drain:		
From Design Requirements (Hrs):	72	**OK! (Design<Req'd)**

PROJECT:	**KN 24394 US20, Arco to Idaho Falls**				**[Linked Data]**
BASIN:	005-M				**[User Input Data]**
DESIGNER:	**BCC, DEA**	**REPORTS TO:**	**SW-6728-M**		**[Calculated Data]**
DATE:	**9/29/2025**				

Basin Data

	SF	Acre	C
Impervious Area	235,234	5.400	0.9
Pervious Area	831,855	19.097	0.2
Total Area	1,067,090	24.497	

Composite "C"	0.35	
Area * "C"	8.680	

			Rational Method Peak Flows (Q=C*I*A)		
Time of Concentration:	10.00	min			
25-Year Intensity	3.61	in/hr	25-year Peak	31.59	cfs
50-Year Intensity	4.16	in/hr	50-year Peak	36.41	cfs
100-year Intensity:	4.69	in/hr	100-year Peak	41.05	cfs

Selected Design Storm:	100-Year
Design Infiltration Rate (in/hr):	1.00

PROJECT:	**KN 24394 US20, Arco to Idaho Falls**			
BASIN:	005-M			
DESIGNER:	**BCC, DEA**	**REPORTS TO:**	**SW-6728-M**	
DATE:	**9/29/2025**			

[Linked Data]
[User Input Data]
[Calculated Data]

MODIFIED RATIONAL METHOD (BOWSTRING) FOR REQUIRED DETENTION STORAGE

#1 Time Inc. (min.)	#2 Time Inc. (sec.) (#1*60)	#3 Intensity (in./hr.)	#4 Q dev. (cfs) (A*C*#3)	#5 V in (cu. ft.)	#6 V out (cu. ft.) (Outf.*#2)	#7 Req. Storage (cu. ft.) (#5-#6)
10.00	600.00	4.69	41.05	33,001	1249	31,752
5	300	6.77	58.76	23,622	624	22,997
10	600	4.69	40.71	32,729	1249	31,480
15	900	3.64	31.59	34,879	1873	33,006
20	1,200	3.16	27.46	38,549	2498	36,051
25	1,500	2.69	23.32	39,736	3122	36,614
30	1,800	2.21	19.18	38,440	3747	34,694
35	2,100	2.06	17.89	41,229	4371	36,858
40	2,400	1.91	16.61	43,244	4995	38,249
45	2,700	1.77	15.32	44,488	5620	38,868
50	3,000	1.62	14.03	44,958	6244	38,714
55	3,300	1.47	12.74	44,657	6869	37,788
60	3,600	1.32	11.46	43,583	7493	36,090
65	3,900	1.27	11.02	45,239	8117	37,121
70	4,200	1.22	10.59	46,634	8742	37,892
75	4,500	1.17	10.16	47,770	9366	38,403
80	4,800	1.12	9.72	48,644	9991	38,654
85	5,100	1.07	9.29	49,259	10615	38,644
90	5,400	1.02	8.85	49,613	11240	38,374
95	5,700	0.97	8.42	49,707	11864	37,843
100	6,000	0.92	7.99	49,540	12488	37,052
105	6,300	0.87	7.55	49,113	13113	36,000
110	6,600	0.82	7.12	48,426	13737	34,689
115	6,900	0.77	6.68	47,478	14362	33,116
120	7,200	0.72	6.25	46,270	14986	31,284
180	10,800	0.50	4.33	47,659	22479	25,180
360	21,600	0.27	2.35	51,287	44958	6,328
720	43,200	0.15	1.32	57,263	89917	0
1440	86,400	0.09	0.75	64,645	179833	0

PROJECT:	**KN 24394 US20, Arco to Idaho Falls**				[Linked Data]
BASIN:	005-M				[User Input Data]
DESIGNER:	**BCC, DEA**	**REPORTS TO:**	**SW-6728-M**		[Calculated Data]
DATE:	**9/29/2025**				

Bio-Infiltration Swales

Lowpoint Swale (Priority 1):

Width (feet):	0
Length (feet):	0
Sideslope 1 (H:V):	0
Sideslope 2 (H:V):	0
Max Depth (feet):	0
Max Volume When Full (CF):	0
LP Swale Infiltration Area (SF):	0

Road Slope Swale (Priority 2):	**Roadside Slope A**	**Roadside Slope B**
Base Width (feet):	81	81
Sideslope 1: (_H:1V)	6	6
Sideslope 2: (_H:V)	6	6
Longitudinal Slope (ft/ft):	0.0090	0.0109
Determination of Max Usable Swale Length Due to Slope:		
Max Water Depth At Downstream End (feet):	*1.0*	*1.0*
Swale Volume (CF):	*4722*	*3899*
Length (feet):	*111*	*92*
Determination of Length of Bermed Swales:		
Swale Length (feet):	115	92
Storage Depth at U/S End (feet):	-0.03	0.00
Swale Volume (CF):	4717	3899
Infiltration Area Per Bermed Swale (SF):	9981	8002
Number of Bermed Swales:	5	5
Total Swale Infiltration Area (SF):	49904	40012
Total Swale Volume (CF):	23584	19495
Available Length 1 (feet):	3977	2199
Proposed Length 2 (feet):	575	460
Difference (feet):	3402 **OK! (Design> Req'd**	1739 **OK! (Design> Req'd)**

Total Design Storage (CF):	**43,079**
Total Infiltration Area (SF):	89,917
Swale Infiltration Rate (cfs):	2.081
Total Infiltration Rate (cfs):	2.081
Total Time to Drain (Hrs):	5.19
Required Treatment Volume:	
Basin Imp. Area x 0.5 inches /12 (CF)	9,801 **OK! (Design> Req'd)**
Required Storage Volume:	
Maximum Storage From Rational Column #7 (CF):	38,868 **OK! (Design> Req'd)**
Target Time to Drain:	
From Design Requirements (Hrs):	72 **OK! (Design<Req'd)**

PROJECT:	**KN 24394 US20, Arco to Idaho Falls**				**[Linked Data]**
BASIN:	006-M				**[User Input Data]**
DESIGNER:	**BCC, DEA**	**REPORTS TO:**	**SW-6784-M**		**[Calculated Data]**
DATE:	**9/29/2025**				

Basin Data

	SF	Acre	C
Impervious Area	122,757	2.818	0.9
Pervious Area	462,877	10.626	0.2
Total Area	585,635	13.444	

Composite "C"	0.35	
Area * "C"	4.662	

			Rational Method Peak Flows (Q=C*I*A)		
Time of Concentration:	10.00	min			
25-Year Intensity	3.61	in/hr	25-year Peak	16.97	cfs
50-Year Intensity	4.16	in/hr	50-year Peak	19.55	cfs
100-year Intensity:	4.69	in/hr	100-year Peak	22.04	cfs

Selected Design Storm:	100-Year
Design Infiltration Rate (in/hr):	1.00

PROJECT:	**KN 24394 US20, Arco to Idaho Falls**			
BASIN:	006-M			
DESIGNER:	**BCC, DEA**	**REPORTS TO:**	**SW-6784-M**	
DATE:	**9/29/2025**			

[Linked Data]
[User Input Data]
[Calculated Data]

MODIFIED RATIONAL METHOD (BOWSTRING) FOR REQUIRED DETENTION STORAGE

#1 Time Inc. (min.)	#2 Time Inc. (sec.) (#1*60)	#3 Intensity (in./hr.)	#4 Q dev. (cfs) (A*C*#3)	#5 V in (cu. ft.)	#6 V out (cu. ft.) (Outf.*#2)	#7 Req. Storage (cu. ft.) (#5-#6)
10.00	600.00	4.69	22.04	17,724	1366	16,358
5	300	6.77	31.56	12,687	683	12,004
10	600	4.69	21.86	17,578	1366	16,212
15	900	3.64	16.97	18,733	2049	16,684
20	1,200	3.16	14.75	20,703	2732	17,971
25	1,500	2.69	12.52	21,341	3415	17,926
30	1,800	2.21	10.30	20,645	4098	16,547
35	2,100	2.06	9.61	22,143	4781	17,362
40	2,400	1.91	8.92	23,225	5464	17,761
45	2,700	1.77	8.23	23,893	6147	17,746
50	3,000	1.62	7.54	24,146	6830	17,316
55	3,300	1.47	6.84	23,984	7513	16,471
60	3,600	1.32	6.15	23,407	8196	15,211
65	3,900	1.27	5.92	24,296	8879	15,417
70	4,200	1.22	5.69	25,046	9562	15,484
75	4,500	1.17	5.45	25,656	10245	15,410
80	4,800	1.12	5.22	26,126	10929	15,197
85	5,100	1.07	4.99	26,456	11612	14,844
90	5,400	1.02	4.75	26,646	12295	14,351
95	5,700	0.97	4.52	26,696	12978	13,719
100	6,000	0.92	4.29	26,607	13661	12,946
105	6,300	0.87	4.06	26,377	14344	12,034
110	6,600	0.82	3.82	26,008	15027	10,981
115	6,900	0.77	3.59	25,499	15710	9,789
120	7,200	0.72	3.36	24,850	16393	8,457
180	10,800	0.50	2.33	25,597	24589	1,007
360	21,600	0.27	1.26	27,545	49178	0
720	43,200	0.15	0.71	30,754	98357	0
1440	86,400	0.09	0.40	34,719	196713	0

PROJECT:	**KN 24394 US20, Arco to Idaho Falls**				[Linked Data]
BASIN:	006-M				[User Input Data]
DESIGNER:	**BCC, DEA**	**REPORTS TO:**	**SW-6784-M**		[Calculated Data]
DATE:	**9/29/2025**				

Bio-Infiltration Swales

Lowpoint Swale (Priority 1):

Width (feet):	0
Length (feet):	0
Sideslope 1 (H:V):	0
Sideslope 2 (H:V):	0
Max Depth (feet):	0
Max Volume When Full (CF):	0
LP Swale Infiltration Area (SF):	0

Road Slope Swale (Priority 2):	**Roadside Slope A**	**Roadside Slope B**
Base Width (feet):	80	80
Sideslope 1: (_H:1V)	6	6
Sideslope 2: (_H:V)	6	6
Longitudinal Slope (ft/ft):	0.0036	0.0025
Determination of Max Usable Swale Length Due to Slope:		
Max Water Depth At Downstream End (feet):	*1.0*	*1.0*
Swale Volume (CF):	*11667*	*16800*
Length (feet):	*278*	*400*
Determination of Length of Bermed Swales:		
Swale Length (feet):	225	300
Storage Depth at U/S End (feet):	0.19	0.25
Swale Volume (CF):	11262	15788
Infiltration Area Per Bermed Swale (SF):	19607	26250
Number of Bermed Swales:	1	3
Total Swale Infiltration Area (SF):	19607	78750
Total Swale Volume (CF):	11262	47363
Available Length 1 (feet):	2212	1062
Proposed Length 2 (feet):	225	900
Difference (feet):	1987 **OK! (Design> Req'd**	162 **OK! (Design> Req'd)**

Total Design Storage (CF):	**58,624**	
Total Infiltration Area (SF):	98,357	
Swale Infiltration Rate (cfs):	2.277	
Total Infiltration Rate (cfs):	2.277	
Total Time to Drain (Hrs):	2.19	
Required Treatment Volume:		
Basin Imp. Area x 0.5 inches /12 (CF)	5,115	**OK! (Design> Req'd)**
Required Storage Volume:		
Maximum Storage From Rational Column #7 (CF):	17,971	**OK! (Design> Req'd)**
Target Time to Drain:		
From Design Requirements (Hrs):	72	**OK! (Design<Req'd)**

PROJECT:	**KN 24394 US20, Arco to Idaho Falls**				**[Linked Data]**
BASIN:	007-M				**[User Input Data]**
DESIGNER:	**BCC, DEA**	**REPORTS TO:**	**SW-6823-M**		**[Calculated Data]**
DATE:	**9/29/2025**				

Basin Data

	SF	Acre	C
Impervious Area	174,939	4.016	0.9
Pervious Area	605,916	13.910	0.2
Total Area	780,856	17.926	

Composite "C"	0.36	
Area * "C"	6.396	

			Rational Method Peak Flows (Q=C*I*A)		
Time of Concentration:	10.00	min			
25-Year Intensity	3.61	in/hr	25-year Peak	23.28	cfs
50-Year Intensity	4.16	in/hr	50-year Peak	26.83	cfs
100-year Intensity:	4.69	in/hr	100-year Peak	30.25	cfs

Selected Design Storm:	100-Year
Design Infiltration Rate (in/hr):	1.00

PROJECT:	**KN 24394 US20, Arco to Idaho Falls**			
BASIN:	007-M			
DESIGNER:	**BCC, DEA**	**REPORTS TO:**	**SW-6823-M**	
DATE:	**9/29/2025**			

[Linked Data]
[User Input Data]
[Calculated Data]

MODIFIED RATIONAL METHOD (BOWSTRING) FOR REQUIRED DETENTION STORAGE

#1 Time Inc. (min.)	#2 Time Inc. (sec.) (#1*60)	#3 Intensity (in./hr.)	#4 Q dev. (cfs) (A*C*#3)	#5 V in (cu. ft.)	#6 V out (cu. ft.) (Outf.*#2)	#7 Req. Storage (cu. ft.) (#5-#6)
10.00	600.00	4.69	30.25	24,320	940	23,380
5	300	6.77	43.30	17,408	470	16,938
10	600	4.69	30.00	24,119	940	23,179
15	900	3.64	23.28	25,704	1410	24,294
20	1,200	3.16	20.23	28,409	1881	26,528
25	1,500	2.69	17.19	29,283	2351	26,933
30	1,800	2.21	14.14	28,329	2821	25,508
35	2,100	2.06	13.19	30,384	3291	27,093
40	2,400	1.91	12.24	31,869	3761	28,108
45	2,700	1.77	11.29	32,785	4231	28,554
50	3,000	1.62	10.34	33,132	4701	28,431
55	3,300	1.47	9.39	32,910	5171	27,738
60	3,600	1.32	8.44	32,118	5642	26,477
65	3,900	1.27	8.12	33,339	6112	27,227
70	4,200	1.22	7.80	34,367	6582	27,785
75	4,500	1.17	7.48	35,204	7052	28,152
80	4,800	1.12	7.16	35,849	7522	28,327
85	5,100	1.07	6.84	36,302	7992	28,309
90	5,400	1.02	6.52	36,563	8462	28,100
95	5,700	0.97	6.20	36,632	8933	27,699
100	6,000	0.92	5.88	36,509	9403	27,106
105	6,300	0.87	5.56	36,194	9873	26,321
110	6,600	0.82	5.25	35,688	10343	25,345
115	6,900	0.77	4.93	34,989	10813	24,176
120	7,200	0.72	4.61	34,099	11283	22,815
180	10,800	0.50	3.19	35,123	16925	18,198
360	21,600	0.27	1.73	37,796	33850	3,946
720	43,200	0.15	0.97	42,200	67700	0
1440	86,400	0.09	0.55	47,640	135399	0

PROJECT:	**KN 24394 US20, Arco to Idaho Falls**				[Linked Data]
BASIN:	007-M				[User Input Data]
DESIGNER:	**BCC, DEA**	**REPORTS TO:**	**SW-6823-M**		[Calculated Data]
DATE:	**9/29/2025**				

Bio-Infiltration Swales

Lowpoint Swale (Priority 1):

Width (feet):	0
Length (feet):	0
Sideslope 1 (H:V):	0
Sideslope 2 (H:V):	0
Max Depth (feet):	0
Max Volume When Full (CF):	0
LP Swale Infiltration Area (SF):	0

Road Slope Swale (Priority 2):	**Roadside Slope A**	**Roadside Slope B**
Base Width (feet):	71	71
Sideslope 1: (_H:1V)	6	6
Sideslope 2: (_H:V)	6	6
Longitudinal Slope (ft/ft):	0.0094	0.0057
Determination of Max Usable Swale Length Due to Slope:		
Max Water Depth At Downstream End (feet):	*1.0*	*1.0*
Swale Volume (CF):	*3989*	*6579*
Length (feet):	*106*	*175*
Determination of Length of Bermed Swales:		
Swale Length (feet):	103	182
Storage Depth at U/S End (feet):	0.03	-0.04
Swale Volume (CF):	3986	6570
Infiltration Area Per Bermed Swale (SF):	7951	13973
Number of Bermed Swales:	5	2
Total Swale Infiltration Area (SF):	39753	27946
Total Swale Volume (CF):	19928	13141
Available Length 1 (feet):	3164	1376
Proposed Length 2 (feet):	515	364
Difference (feet):	2649 **OK! (Design> Req'd**	1012 **OK! (Design> Req'd)**

Total Design Storage (CF):	**33,068**	
Total Infiltration Area (SF):	67,700	
Swale Infiltration Rate (cfs):	1.567	
Total Infiltration Rate (cfs):	1.567	
Total Time to Drain (Hrs):	5.06	
Required Treatment Volume:		
Basin Imp. Area x 0.5 inches /12 (CF)	7,289	**OK! (Design> Req'd)**
Required Storage Volume:		
Maximum Storage From Rational Column #7 (CF):	28,554	**OK! (Design> Req'd)**
Target Time to Drain:		
From Design Requirements (Hrs):	72	**OK! (Design<Req'd)**

PROJECT:	**KN 24394 US20, Arco to Idaho Falls**				**[Linked Data]**
BASIN:	008-M				**[User Input Data]**
DESIGNER:	**BCC, DEA**	**REPORTS TO:**	**SW-6868-M**		**[Calculated Data]**
DATE:	**9/29/2025**				

Basin Data

	SF	Acre	C
Impervious Area	236,586	5.431	0.9
Pervious Area	938,611	21.548	0.2
Total Area	1,175,197	26.979	

Composite "C"	0.34	
Area * "C"	9.198	

			Rational Method Peak Flows (Q=C*I*A)		
Time of Concentration:	10.00	min			
25-Year Intensity	3.61	in/hr	25-year Peak	33.48	cfs
50-Year Intensity	4.16	in/hr	50-year Peak	38.58	cfs
100-year Intensity:	4.69	in/hr	100-year Peak	43.50	cfs

Selected Design Storm:	100-Year
Design Infiltration Rate (in/hr):	1.00

PROJECT:	**KN 24394 US20, Arco to Idaho Falls**			
BASIN:	008-M			
DESIGNER:	**BCC, DEA**	**REPORTS TO:**	**SW-6868-M**	
DATE:	**9/29/2025**			

[Linked Data]
[User Input Data]
[Calculated Data]

MODIFIED RATIONAL METHOD (BOWSTRING) FOR REQUIRED DETENTION STORAGE

#1 Time Inc. (min.)	#2 Time Inc. (sec.) (#1*60)	#3 Intensity (in./hr.)	#4 Q dev. (cfs) (A*C*#3)	#5 V in (cu. ft.)	#6 V out (cu. ft.) (Outf.*#2)	#7 Req. Storage (cu. ft.) (#5-#6)
10.00	600.00	4.69	43.50	34,971	1202	33,769
5	300	6.77	62.27	25,032	601	24,431
10	600	4.69	43.14	34,682	1202	33,480
15	900	3.64	33.48	36,961	1803	35,159
20	1,200	3.16	29.10	40,850	2404	38,446
25	1,500	2.69	24.71	42,108	3005	39,103
30	1,800	2.21	20.33	40,735	3605	37,129
35	2,100	2.06	18.96	43,690	4206	39,483
40	2,400	1.91	17.60	45,826	4807	41,018
45	2,700	1.77	16.23	47,143	5408	41,735
50	3,000	1.62	14.87	47,642	6009	41,633
55	3,300	1.47	13.51	47,322	6610	40,712
60	3,600	1.32	12.14	46,184	7211	38,973
65	3,900	1.27	11.68	47,939	7812	40,127
70	4,200	1.22	11.22	49,418	8413	41,005
75	4,500	1.17	10.76	50,621	9014	41,607
80	4,800	1.12	10.30	51,548	9615	41,933
85	5,100	1.07	9.84	52,199	10215	41,984
90	5,400	1.02	9.38	52,574	10816	41,758
95	5,700	0.97	8.92	52,674	11417	41,257
100	6,000	0.92	8.46	52,497	12018	40,479
105	6,300	0.87	8.00	52,045	12619	39,426
110	6,600	0.82	7.54	51,316	13220	38,096
115	6,900	0.77	7.08	50,312	13821	36,491
120	7,200	0.72	6.62	49,032	14422	34,610
180	10,800	0.50	4.59	50,504	21633	28,871
360	21,600	0.27	2.49	54,348	43265	11,082
720	43,200	0.15	1.40	60,681	86531	0
1440	86,400	0.09	0.79	68,504	173062	0

PROJECT:	**KN 24394 US20, Arco to Idaho Falls**				[Linked Data]
BASIN:	008-M				[User Input Data]
DESIGNER:	**BCC, DEA**	**REPORTS TO:**	**SW-6868-M**		[Calculated Data]
DATE:	**9/29/2025**				

Bio-Infiltration Swales

Lowpoint Swale (Priority 1):

Width (feet):	0
Length (feet):	0
Sideslope 1 (H:V):	0
Sideslope 2 (H:V):	0
Max Depth (feet):	0
Max Volume When Full (CF):	0
LP Swale Infiltration Area (SF):	0

Road Slope Swale (Priority 2):	**Roadside Slope A**	**Roadside Slope B**
Base Width (feet):	83	83
Sideslope 1: (_H:1V)	6	6
Sideslope 2: (_H:V)	6	6
Longitudinal Slope (ft/ft):	0.0199	0.0062
Determination of Max Usable Swale Length Due to Slope:		
Max Water Depth At Downstream End (feet):	*1.0*	*1.0*
Swale Volume (CF):	*2186*	*7016*
Length (feet):	*50*	*161*
Determination of Length of Bermed Swales:		
Swale Length (feet):	50	161
Storage Depth at U/S End (feet):	0.00	0.00
Swale Volume (CF):	2186	7016
Infiltration Area Per Bermed Swale (SF):	4452	14331
Number of Bermed Swales:	13	2
Total Swale Infiltration Area (SF):	57870	28661
Total Swale Volume (CF):	28416	14032
Available Length 1 (feet):	5749	997
Proposed Length 2 (feet):	650	322
Difference (feet):	5099 **OK! (Design> Req'd**	675 **OK! (Design> Req'd)**

Total Design Storage (CF):	**42,449**
Total Infiltration Area (SF):	86,531
Swale Infiltration Rate (cfs):	2.003
Total Infiltration Rate (cfs):	2.003
Total Time to Drain (Hrs):	5.82

Required Treatment Volume:		
Basin Imp. Area x 0.5 inches /12 (CF)	9,858	**OK! (Design> Req'd)**
Required Storage Volume:		
Maximum Storage From Rational Column #7 (CF):	41,984	**OK! (Design> Req'd)**
Target Time to Drain:		
From Design Requirements (Hrs):	72	**OK! (Design<Req'd)**

PROJECT:	**KN 24394 US20, Arco to Idaho Falls**				**[Linked Data]**
BASIN:	009-M				**[User Input Data]**
DESIGNER:	**BCC, DEA**	**REPORTS TO:**	**SW-6941-M**		**[Calculated Data]**
DATE:	**9/29/2025**				

Basin Data

	SF	Acre	C
Impervious Area	97,099	2.229	0.9
Pervious Area	288,101	6.614	0.2
Total Area	385,199	8.843	

Composite "C"	0.38	
Area * "C"	3.329	

			Rational Method Peak Flows (Q=C*I*A)		
Time of Concentration:	10.00	min			
25-Year Intensity	3.61	in/hr	25-year Peak	12.12	cfs
50-Year Intensity	4.16	in/hr	50-year Peak	13.96	cfs
100-year Intensity:	4.69	in/hr	100-year Peak	15.74	cfs

Selected Design Storm:	100-Year
Design Infiltration Rate (in/hr):	1.00

PROJECT:	**KN 24394 US20, Arco to Idaho Falls**			
BASIN:	009-M			
DESIGNER:	**BCC, DEA**	**REPORTS TO:**	**SW-6941-M**	
DATE:	**9/29/2025**			

[Linked Data]
[User Input Data]
[Calculated Data]

MODIFIED RATIONAL METHOD (BOWSTRING) FOR REQUIRED DETENTION STORAGE

#1 Time Inc. (min.)	#2 Time Inc. (sec.) (#1*60)	#3 Intensity (in./hr.)	#4 Q dev. (cfs) (A*C*#3)	#5 V in (cu. ft.)	#6 V out (cu. ft.) (Outf.*#2)	#7 Req. Storage (cu. ft.) (#5-#6)
10.00	600.00	4.69	15.74	12,657	713	11,945
5	300	6.77	22.54	9,060	356	8,704
10	600	4.69	15.61	12,553	713	11,840
15	900	3.64	12.12	13,378	1069	12,309
20	1,200	3.16	10.53	14,785	1425	13,360
25	1,500	2.69	8.94	15,240	1781	13,459
30	1,800	2.21	7.36	14,743	2138	12,606
35	2,100	2.06	6.86	15,813	2494	13,319
40	2,400	1.91	6.37	16,586	2850	13,736
45	2,700	1.77	5.88	17,063	3206	13,856
50	3,000	1.62	5.38	17,243	3563	13,681
55	3,300	1.47	4.89	17,128	3919	13,209
60	3,600	1.32	4.39	16,716	4275	12,440
65	3,900	1.27	4.23	17,351	4632	12,719
70	4,200	1.22	4.06	17,886	4988	12,898
75	4,500	1.17	3.89	18,321	5344	12,977
80	4,800	1.12	3.73	18,657	5700	12,957
85	5,100	1.07	3.56	18,893	6057	12,836
90	5,400	1.02	3.40	19,029	6413	12,616
95	5,700	0.97	3.23	19,064	6769	12,295
100	6,000	0.92	3.06	19,001	7125	11,875
105	6,300	0.87	2.90	18,837	7482	11,355
110	6,600	0.82	2.73	18,573	7838	10,735
115	6,900	0.77	2.56	18,210	8194	10,015
120	7,200	0.72	2.40	17,746	8551	9,196
180	10,800	0.50	1.66	18,279	12826	5,453
360	21,600	0.27	0.90	19,670	25652	0
720	43,200	0.15	0.51	21,962	51303	0
1440	86,400	0.09	0.29	24,794	102606	0

PROJECT:	**KN 24394 US20, Arco to Idaho Falls**				[Linked Data]
BASIN:	009-M				[User Input Data]
DESIGNER:	**BCC, DEA**	**REPORTS TO:**	**SW-6941-M**		[Calculated Data]
DATE:	**9/29/2025**				

Bio-Infiltration Swales

Lowpoint Swale (Priority 1):

Width (feet):	0
Length (feet):	0
Sideslope 1 (H:V):	0
Sideslope 2 (H:V):	0
Max Depth (feet):	0
Max Volume When Full (CF):	0
LP Swale Infiltration Area (SF):	0

Road Slope Swale (Priority 2):	**Roadside Slope A**	**Roadside Slope B**
Base Width (feet):	100	100
Sideslope 1: (_H:1V)	6	6
Sideslope 2: (_H:V)	6	6
Longitudinal Slope (ft/ft):	0.0062	0.0031
Determination of Max Usable Swale Length Due to Slope:		
Max Water Depth At Downstream End (feet):	*1.0*	*1.0*
Swale Volume (CF):	*8387*	*16774*
Length (feet):	*161*	*323*
Determination of Length of Bermed Swales:		
Swale Length (feet):	161	323
Storage Depth at U/S End (feet):	0.00	0.00
Swale Volume (CF):	8387	16774
Infiltration Area Per Bermed Swale (SF):	17068	34235
Number of Bermed Swales:	1	1
Total Swale Infiltration Area (SF):	17068	34235
Total Swale Volume (CF):	8387	16774
Available Length 1 (feet):	1548	571
Proposed Length 2 (feet):	161	323
Difference (feet):	1387 OK! (Design> Req'd	248 OK! (Design> Req'd)

Total Design Storage (CF):	**25,161**
Total Infiltration Area (SF):	51,303
Swale Infiltration Rate (cfs):	1.188
Total Infiltration Rate (cfs):	1.188
Total Time to Drain (Hrs):	3.24

Required Treatment Volume:		
Basin Imp. Area x 0.5 inches /12 (CF)	4,046	OK! (Design> Req'd)
Required Storage Volume:		
Maximum Storage From Rational Column #7 (CF):	13,856	OK! (Design> Req'd)
Target Time to Drain:		
From Design Requirements (Hrs):	72	OK! (Design<Req'd)

PROJECT:	**KN 24394 US20, Arco to Idaho Falls**				**[Linked Data]**
BASIN:	010-M				**[User Input Data]**
DESIGNER:	**BCC, DEA**	**REPORTS TO:**	**SW-6957-M**		**[Calculated Data]**
DATE:	**9/29/2025**				

Basin Data

	SF	Acre	C
Impervious Area	7,891	0.181	0.9
Pervious Area	30,683	0.704	0.2
Total Area	38,574	0.886	

Composite "C"	0.34	
Area * "C"	0.304	

			Rational Method Peak Flows (Q=C*I*A)		
Time of Concentration:	10.00	min			
25-Year Intensity	3.61	in/hr	25-year Peak	1.11	cfs
50-Year Intensity	4.16	in/hr	50-year Peak	1.27	cfs
100-year Intensity:	4.69	in/hr	100-year Peak	1.44	cfs

Selected Design Storm:	100-Year
Design Infiltration Rate (in/hr):	1.00

PROJECT:	**KN 24394 US20, Arco to Idaho Falls**			
BASIN:	010-M			
DESIGNER:	**BCC, DEA**	**REPORTS TO:**	**SW-6957-M**	
DATE:	**9/29/2025**			

[Linked Data]
[User Input Data]
[Calculated Data]

MODIFIED RATIONAL METHOD (BOWSTRING) FOR REQUIRED DETENTION STORAGE

#1 Time Inc. (min.)	#2 Time Inc. (sec.) (#1*60)	#3 Intensity (in./hr.)	#4 Q dev. (cfs) (A*C*#3)	#5 V in (cu. ft.)	#6 V out (cu. ft.) (Outf.*#2)	#7 Req. Storage (cu. ft.) (#5-#6)
10.00	600.00	4.69	1.44	1,156	34	1,121
5	300	6.77	2.06	827	17	810
10	600	4.69	1.43	1,146	34	1,112
15	900	3.64	1.11	1,221	51	1,170
20	1,200	3.16	0.96	1,350	68	1,282
25	1,500	2.69	0.82	1,391	85	1,306
30	1,800	2.21	0.67	1,346	102	1,244
35	2,100	2.06	0.63	1,444	119	1,325
40	2,400	1.91	0.58	1,514	136	1,378
45	2,700	1.77	0.54	1,558	153	1,405
50	3,000	1.62	0.49	1,574	170	1,404
55	3,300	1.47	0.45	1,564	187	1,377
60	3,600	1.32	0.40	1,526	204	1,322
65	3,900	1.27	0.39	1,584	221	1,363
70	4,200	1.22	0.37	1,633	238	1,395
75	4,500	1.17	0.36	1,673	255	1,417
80	4,800	1.12	0.34	1,703	272	1,431
85	5,100	1.07	0.33	1,725	289	1,436
90	5,400	1.02	0.31	1,737	306	1,431
95	5,700	0.97	0.29	1,740	323	1,417
100	6,000	0.92	0.28	1,735	340	1,394
105	6,300	0.87	0.26	1,720	357	1,362
110	6,600	0.82	0.25	1,696	374	1,321
115	6,900	0.77	0.23	1,662	391	1,271
120	7,200	0.72	0.22	1,620	408	1,212
180	10,800	0.50	0.15	1,669	612	1,056
360	21,600	0.27	0.08	1,796	1225	571
720	43,200	0.15	0.05	2,005	2449	0
1440	86,400	0.09	0.03	2,263	4898	0

PROJECT:	**KN 24394 US20, Arco to Idaho Falls**				**[Linked Data]**
BASIN:	010-M				**[User Input Data]**
DESIGNER:	**BCC, DEA**	**REPORTS TO:**	**SW-6957-M**		**[Calculated Data]**
DATE:	**9/29/2025**				

Bio-Infiltration Swales

Lowpoint Swale (Priority 1):

Width (feet):	0
Length (feet):	0
Sideslope 1 (H:V):	0
Sideslope 2 (H:V):	0
Max Depth (feet):	0
Max Volume When Full (CF):	0
LP Swale Infiltration Area (SF):	0

Road Slope Swale (Priority 2):	**Roadside Slope A**	**Roadside Slope B**
Base Width (feet):	3	3
Sideslope 1: (_H:1V)	6	6
Sideslope 2: (_H:V)	6	6
Longitudinal Slope (ft/ft):	0.0067	NA

Determination of Max Usable Swale Length Due to Slope:

Max Water Depth At Downstream End (feet):	*1.0*	*1.0*
Swale Volume (CF):	*522*	*0*
Length (feet):	*149*	*0*

Determination of Length of Bermed Swales:

Swale Length (feet):	25		0	
Storage Depth at U/S End (feet):	0.83		#VALUE!	
Swale Volume (CF):	195		0	
Infiltration Area Per Bermed Swale (SF):	350		0	
Number of Bermed Swales:	7		0	
Total Swale Infiltration Area (SF):	2449		0	
Total Swale Volume (CF):	1365		0	
Available Length 1 (feet):	1459		0	
Proposed Length 2 (feet):	175		0	
Difference (feet):	1284	OK! (Design> Req'd	0	No Good (Design< Storage)

Total Design Storage (CF):	**1,365**
Total Infiltration Area (SF):	2,449
Swale Infiltration Rate (cfs):	0.057
Total Infiltration Rate (cfs):	0.057
Total Time to Drain (Hrs):	7.03

Required Treatment Volume:		
Basin Imp. Area x 0.5 inches /12 (CF)	329	OK! (Design> Req'd)
Required Storage Volume:		
Maximum Storage From Rational Column #7 (CF):	1,436	No Good (Design< Storage)
Target Time to Drain:		
From Design Requirements (Hrs):	72	OK! (Design<Req'd)

[Linked Data]	KN 24394 US20, Arco to Idaho Falls
[User Input Data]	
[Calculated Data]	

Basin	Owner	Impervious Area (ft^2)	Impervious Area (Ac.)	Pervious Area (ft^2)	Pervious Area (Ac.)	C-Value, Weighted	Total Basin Area (ft^2)	Reports To
2-1 R	ITD	6,324	0.15	15,268	0.35	0.41	21,591	SW-5895-R
2-2 R	ITD	98,837	2.27	167,612	3.85	0.46	266,449	SW-5897-R
2-3 R	ITD	58,828	1.35	102,082	2.34	0.46	160,910	SW-5942-R
2-4 R	ITD	200,094	4.59	370,137	8.50	0.45	570,231	SW-5969-R
2-5 R	ITD	104,061	2.39	323,879	7.44	0.37	427,940	SW-6060-R
2-6 R	ITD	247,521	5.68	408,583	9.38	0.46	656,104	SW-6137-R
2-7 R	ITD	109,261	2.51	186,278	4.28	0.46	295,538	SW-6221-R
2-8 R	ITD	57,763	1.33	124,924	2.87	0.42	182,687	SW-6263-R
2-9 R	ITD	171,641	3.94	364,753	8.37	0.42	536,393	SW-6289-R
2-10 R	ITD	121,938	2.80	206,999	4.75	0.46	328,937	SW-6367-R
2-1 L	ITD	106,158	2.44	196,152	4.50	0.45	302,311	SW-5895-L
2-2 L	ITD	57,162	1.31	102,983	2.36	0.45	160,144	SW-5943-L
2-3 L	ITD	77,357	1.78	136,456	3.13	0.45	213,813	SW-5969-L
2-4 L	ITD	172,343	3.96	312,860	7.18	0.45	485,203	SW-6004-L
2-5 L	ITD	141,004	3.24	309,177	7.10	0.42	450,181	SW-6078-L
2-6 L	ITD	98,946	2.27	327,897	7.53	0.36	426,843	SW-6138-L
2-7 L	ITD	66,333	1.52	217,005	4.98	0.36	283,338	SW-6215-L
2-8 L	ITD	53,763	1.23	140,949	3.24	0.39	194,713	SW-6262-L
2-9 L	ITD	168,859	3.88	377,938	8.68	0.42	546,797	SW-6290-L
2-10 L	ITD	121,557	2.79	243,843	5.60	0.43	365,401	SW-6367-L
2-1 M	ITD	9,198	0.21	15,522	0.36	0.46	24,720	SW-5895-M
2-2 M	ITD	144,489	3.32	243,825	5.60	0.46	388,314	SW-5897-M
2-3 M	ITD	84,051	1.93	141,836	3.26	0.46	225,887	SW-5943-M
2-4 M	ITD	357,114	8.20	739,529	16.98	0.43	1,096,644	SW-5986-M
2-5 M	ITD	283,995	6.52	562,469	12.91	0.43	846,464	SW-6069-M
2-6 M	ITD	273,859	6.29	436,273	10.02	0.47	710,132	SW-6138-M
2-7 M	ITD	160,821	3.69	310,883	7.14	0.44	471,704	SW-6218-M
2-8 M	ITD	122,429	2.81	275,567	6.33	0.42	397,995	SW-6262-M
2-9 M	ITD	247,636	5.68	411,347	9.44	0.46	658,984	SW-6290-M
2-10 M	ITD	177,088	4.07	299,294	6.87	0.46	476,382	SW-6367-M

PROJECT:	**KN 24394 US20, Arco to Idaho Falls**				**[Linked Data]**
BASIN:	2-1 R				**[User Input Data]**
DESIGNER:	**BCC, DEA**	**REPORTS TO:**	**SW-5895-R**		**[Calculated Data]**
DATE:	**9/29/2025**				

Basin Data

	SF	Acre	C
Impervious Area	6,324	0.145	0.9
Pervious Area	15,268	0.350	0.2
Total Area	21,591	0.496	

Composite "C"	0.41	
Area * "C"	0.201	

Time of Concentration:	10.00	min
25-Year Intensity	3.61	in/hr
50-Year Intensity	4.16	in/hr
100-year Intensity:	4.69	in/hr

Rational Method Peak Flows (Q=C*I*A)

25-year Peak	0.73	cfs
50-year Peak	0.84	cfs
100-year Peak	0.95	cfs

Selected Design Storm: 100-Year

Design Infiltration Rate (in/hr): 1.00

TIME OF CONCENTRATION (Minutes)

Tc (A) Channel or Pipe:

Shape (A) =	Trapezoidal	
L (A) =	200	ft
n(A) =	0.03	Grass Channel
S(A) =	0.009	ft/ft
R(A) =	0.57	ft
V(A) =	3.25	ft/s
Tc (A) =	1.02	min

Tc (B) Channel or Pipe:

Shape (B) =	Circular	
L (B) =	0	
n(B) =	0.013	Concrete
S(B) =	0.01	
R(B) =	0.50	
V(B) =	7.22	
Tc (B) =	0.00	

Tc (C) Shallow/Conc. Flow:

L (C) =	20	
S(C) =	1.00	%
k =	0.213	Short Grass
V (C) =	0.70	
Tc (C) =	0.48	

Tc (D) Sheet Flow:

L (D) =	22	
n(D) =	0.013	Asphalt
S(D) =	0.02	
Tc (D) Estimate =	0.66	<-- Change
Tc Esti. Total =	5.00	min. 5 mins
Resulting I (in/hr) =	6.77	
Tc (D) =	0.66	
		Goal Seek to 0
Tc(tot.) =	10.00	0.00
Intensity (in/hr)=	4.69	

PROJECT:	**KN 24394 US20, Arco to Idaho Falls**			
BASIN:	2-1 R			
DESIGNER:	**BCC, DEA**	**REPORTS TO:**	**SW-5895-R**	
DATE:	**9/29/2025**			

[Linked Data]
[User Input Data]
[Calculated Data]

MODIFIED RATIONAL METHOD (BOWSTRING) FOR REQUIRED DETENTION STORAGE

#1 Time Inc. (min.)	#2 Time Inc. (sec.) (#1*60)	#3 Intensity (in./hr.)	#4 Q dev. (cfs) (A*C*#3)	#5 V in (cu. ft.)	#6 V out (cu. ft.) (Outf.*#2)	#7 Req. Storage (cu. ft.) (#5-#6)
10.00	600.00	4.69	0.95	763	27	737
5	300	6.77	1.36	546	13	533
10	600	4.69	0.94	757	27	730
15	900	3.64	0.73	807	40	767
20	1,200	3.16	0.64	892	53	838
25	1,500	2.69	0.54	919	66	853
30	1,800	2.21	0.44	889	80	809
35	2,100	2.06	0.41	954	93	861
40	2,400	1.91	0.38	1,000	106	894
45	2,700	1.77	0.35	1,029	120	909
50	3,000	1.62	0.32	1,040	133	907
55	3,300	1.47	0.29	1,033	146	887
60	3,600	1.32	0.26	1,008	159	849
65	3,900	1.27	0.25	1,046	173	874
70	4,200	1.22	0.24	1,079	186	893
75	4,500	1.17	0.23	1,105	199	906
80	4,800	1.12	0.22	1,125	213	913
85	5,100	1.07	0.21	1,139	226	914
90	5,400	1.02	0.20	1,148	239	908
95	5,700	0.97	0.19	1,150	252	897
100	6,000	0.92	0.18	1,146	266	880
105	6,300	0.87	0.17	1,136	279	857
110	6,600	0.82	0.16	1,120	292	828
115	6,900	0.77	0.15	1,098	305	793
120	7,200	0.72	0.14	1,070	319	751
180	10,800	0.50	0.10	1,102	478	624
360	21,600	0.27	0.05	1,186	956	230
720	43,200	0.15	0.03	1,324	1913	0
1440	86,400	0.09	0.02	1,495	3825	0

PROJECT:	**KN 24394 US20, Arco to Idaho Falls**				**[Linked Data]**
BASIN:	2-1 R				**[User Input Data]**
DESIGNER:	**BCC, DEA**	**REPORTS TO:**	**SW-5895-R**		**[Calculated Data]**
DATE:	**9/29/2025**				

Bio-Infiltration Swales

Road Slope Swale (Priority 2):	**Roadside Slope A**		**Roadside Slope B**	
Base Width (feet):	2		2	
Sideslope 1: (_H:1V)	2		2	
Sideslope 2: (_H:V)	2		2	
Longitudinal Slope (ft/ft):	0.0000		0.0014	
Determination of Max Usable Swale Length Due to Slope:				
Max Water Depth At Downstream End (feet):	*1.5*		*1.5*	
Swale Volume (CF):	*0*		*3214*	
Length (feet):	*0*		*1071*	
Determination of Length of Bermed Swales:				
Swale Length (feet):	0		125	
Storage Depth at U/S End (feet):	1.50		1.33	
Swale Volume (CF):	0		853	
Infiltration Area Per Bermed Swale (SF):	0		956	
Number of Bermed Swales:	0		2	
Total Swale Infiltration Area (SF):	0		1913	
Total Swale Volume (CF):	0		1705	
Available Length 1 (feet):	0		287	
Proposed Length 2 (feet):	0		250	
Difference (feet):	0	**Good (Design< Stor**	37	**OK! (Design> Req'd)**

Total Design Storage (CF):	**1,705**	
Total Infiltration Area (SF):	1,913	
Swale Infiltration Rate (cfs):	0.044	
Total Infiltration Rate (cfs):	0.044	
Total Time to Drain (Hrs):	5.73	
Required Treatment Volume:		
Basin Imp. Area x 0.5 inches /12 (CF)	263	**OK! (Design> Req'd)**
Required Storage Volume:		
Maximum Storage From Rational Column #7 (CF):	914	**OK! (Design> Req'd)**
Target Time to Drain:		
From Design Requirements (Hrs):	72	**OK! (Design<Req'd)**

PROJECT:	**KN 24394 US20, Arco to Idaho Falls**				**[Linked Data]**
BASIN:	2-2 R				**[User Input Data]**
DESIGNER:	**BCC, DEA**	**REPORTS TO:**	**SW-5897-R**		**[Calculated Data]**
DATE:	**9/29/2025**				

Basin Data

	SF	Acre	C
Impervious Area	98,837	2.269	0.9
Pervious Area	167,612	3.848	0.2
Total Area	266,449	6.117	

Composite "C"	0.46	
Area * "C"	2.812	
Time of Concentration:	10.00	min
25-Year Intensity	3.61	in/hr
50-Year Intensity	4.16	in/hr
100-year Intensity:	4.69	in/hr

Rational Method Peak Flows (Q=C*I*A)

25-year Peak	10.23	cfs
50-year Peak	11.79	cfs
100-year Peak	13.30	cfs

Selected Design Storm: 100-Year

Design Infiltration Rate (in/hr): 1.00

TIME OF CONCENTRATION (Minutes)

Tc (A) Channel or Pipe:

Shape (A) =	Trapezoidal	
L (A) =	200	ft
n(A) =	0.03	Grass Channel
S(A) =	0.009	ft/ft
R(A) =	0.57	ft
V(A) =	3.25	ft/s
Tc (A) =	1.02	min

Tc (B) Channel or Pipe:

Shape (B) =	Circular	
L (B) =	0	
n(B) =	0.013	Concrete
S(B) =	0.01	
R(B) =	0.50	
V(B) =	7.22	
Tc (B) =	0.00	

Tc (C) Shallow/Conc. Flow:

L (C) =	20	
S(C) =	1.00	%
k =	0.213	Short Grass
V (C) =	0.70	
Tc (C) =	0.48	

Tc (D) Sheet Flow:

L (D) =	22	
n(D) =	0.013	Asphalt
S(D) =	0.02	
Tc (D) Estimate =	0.66	<-- Change
Tc Esti. Total =	5.00	min. 5 mins
Resulting I (in/hr) =	6.77	
Tc (D) =	0.66	
		Goal Seek to 0
Tc(tot.) =	10.00	0.00
Intensity (in/hr)=	4.69	

PROJECT:	**KN 24394 US20, Arco to Idaho Falls**			
BASIN:	2-2 R			
DESIGNER:	**BCC, DEA**	**REPORTS TO:**	**SW-5897-R**	
DATE:	**9/29/2025**			

[Linked Data]
[User Input Data]
[Calculated Data]

MODIFIED RATIONAL METHOD (BOWSTRING) FOR REQUIRED DETENTION STORAGE

#1 Time Inc. (min.)	#2 Time Inc. (sec.) (#1*60)	#3 Intensity (in./hr.)	#4 Q dev. (cfs) (A*C*#3)	#5 V in (cu. ft.)	#6 V out (cu. ft.) (Outf.*#2)	#7 Req. Storage (cu. ft.) (#5-#6)
10.00	600.00	4.69	13.30	10,690	307	10,383
5	300	6.77	19.03	7,652	154	7,499
10	600	4.69	13.19	10,602	307	10,295
15	900	3.64	10.23	11,299	461	10,838
20	1,200	3.16	8.89	12,487	614	11,873
25	1,500	2.69	7.55	12,872	768	12,104
30	1,800	2.21	6.21	12,452	921	11,531
35	2,100	2.06	5.80	13,356	1075	12,281
40	2,400	1.91	5.38	14,009	1228	12,780
45	2,700	1.77	4.96	14,411	1382	13,029
50	3,000	1.62	4.55	14,564	1535	13,028
55	3,300	1.47	4.13	14,466	1689	12,777
60	3,600	1.32	3.71	14,118	1843	12,276
65	3,900	1.27	3.57	14,655	1996	12,659
70	4,200	1.22	3.43	15,107	2150	12,957
75	4,500	1.17	3.29	15,474	2303	13,171
80	4,800	1.12	3.15	15,758	2457	13,301
85	5,100	1.07	3.01	15,957	2610	13,347
90	5,400	1.02	2.87	16,072	2764	13,308
95	5,700	0.97	2.73	16,102	2917	13,185
100	6,000	0.92	2.59	16,048	3071	12,977
105	6,300	0.87	2.45	15,910	3224	12,685
110	6,600	0.82	2.31	15,687	3378	12,309
115	6,900	0.77	2.16	15,380	3531	11,849
120	7,200	0.72	2.02	14,989	3685	11,304
180	10,800	0.50	1.40	15,439	5528	9,911
360	21,600	0.27	0.76	16,614	11055	5,559
720	43,200	0.15	0.43	18,550	22110	0
1440	86,400	0.09	0.24	20,941	44220	0

PROJECT:	**KN 24394 US20, Arco to Idaho Falls**				**[Linked Data]**
BASIN:	2-2 R				**[User Input Data]**
DESIGNER:	**BCC, DEA**	**REPORTS TO:**	**SW-5897-R**		**[Calculated Data]**
DATE:	**9/29/2025**				

Bio-Infiltration Swales

Road Slope Swale (Priority 2):	**Roadside Slope A**		**Roadside Slope B**	
Base Width (feet):	2		2	
Sideslope 1: (_H:1V)	2		2	
Sideslope 2: (_H:V)	2		2	
Longitudinal Slope (ft/ft):	0.0052		0.0038	
Determination of Max Usable Swale Length Due to Slope:				
Max Water Depth At Downstream End (feet):	*1.5*		*1.5*	
Swale Volume (CF):	*865*		*1184*	
Length (feet):	*288*		*395*	
Determination of Length of Bermed Swales:				
Swale Length (feet):	275		300	
Storage Depth at U/S End (feet):	0.07		0.36	
Swale Volume (CF):	864		1142	
Infiltration Area Per Bermed Swale (SF):	1414		1716	
Number of Bermed Swales:	12		3	
Total Swale Infiltration Area (SF):	16962		5148	
Total Swale Volume (CF):	10373		3426	
Available Length 1 (feet):	3357		1136	
Proposed Length 2 (feet):	3300		900	
Difference (feet):	57	**OK! (Design> Req'd**	236	**OK! (Design> Req'd)**

Total Design Storage (CF):	**13,799**	
Total Infiltration Area (SF):	22,110	
Swale Infiltration Rate (cfs):	0.512	
Total Infiltration Rate (cfs):	0.512	
Total Time to Drain (Hrs):	7.24	
Required Treatment Volume:		
Basin Imp. Area x 0.5 inches /12 (CF)	4,118	**OK! (Design> Req'd)**
Required Storage Volume:		
Maximum Storage From Rational Column #7 (CF):	13,347	**OK! (Design> Req'd)**
Target Time to Drain:		
From Design Requirements (Hrs):	72	**OK! (Design<Req'd)**

PROJECT:	**KN 24394 US20, Arco to Idaho Falls**				**[Linked Data]**
BASIN:	2-3 R				**[User Input Data]**
DESIGNER:	**BCC, DEA**	**REPORTS TO:**	**SW-5942-R**		**[Calculated Data]**
DATE:	**9/29/2025**				

Basin Data

	SF	Acre	C
Impervious Area	58,828	1.350	0.9
Pervious Area	102,082	2.343	0.2
Total Area	160,910	3.694	

Composite "C"	0.46	
Area * "C"	1.684	
Time of Concentration:	10.00	min
25-Year Intensity	3.61	in/hr
50-Year Intensity	4.16	in/hr
100-year Intensity:	4.69	in/hr

Rational Method Peak Flows (Q=C*I*A)

25-year Peak	6.13	cfs
50-year Peak	7.06	cfs
100-year Peak	7.96	cfs

Selected Design Storm: 100-Year

Design Infiltration Rate (in/hr): 1.00

TIME OF CONCENTRATION (Minutes)

Tc (A) Channel or Pipe:

Shape (A) =	Trapezoidal	
L (A) =	200	ft
n(A) =	0.03	Grass Channel
S(A) =	0.009	ft/ft
R(A) =	0.57	ft
V(A) =	3.25	ft/s
Tc (A) =	1.02	min

Tc (B) Channel or Pipe:

Shape (B) =	Circular	
L (B) =	0	
n(B) =	0.013	Concrete
S(B) =	0.01	
R(B) =	0.50	
V(B) =	7.22	
Tc (B) =	0.00	

Tc (C) Shallow/Conc. Flow:

L (C) =	20	
S(C) =	1.00	%
k =	0.213	Short Grass
V (C) =	0.70	
Tc (C) =	0.48	

Tc (D) Sheet Flow:

L (D) =	22	
n(D) =	0.013	Asphalt
S(D) =	0.02	
Tc (D) Estimate =	0.66	<-- Change
Tc Esti. Total =	5.00	min. 5 mins
Resulting I (in/hr) =	6.77	
Tc (D) =	0.66	
		Goal Seek to 0
Tc(tot.) =	10.00	0.00
Intensity (in/hr)=	4.69	

PROJECT:	**KN 24394 US20, Arco to Idaho Falls**			
BASIN:	2-3 R			
DESIGNER:	**BCC, DEA**	**REPORTS TO:**	**SW-5942-R**	
DATE:	**9/29/2025**			

[Linked Data]
[User Input Data]
[Calculated Data]

MODIFIED RATIONAL METHOD (BOWSTRING) FOR REQUIRED DETENTION STORAGE

#1 Time Inc. (min.)	#2 Time Inc. (sec.) (#1*60)	#3 Intensity (in./hr.)	#4 Q dev. (cfs) (A*C*#3)	#5 V in (cu. ft.)	#6 V out (cu. ft.) (Outf.*#2)	#7 Req. Storage (cu. ft.) (#5-#6)
10.00	600.00	4.69	7.96	6,403	219	6,184
5	300	6.77	11.40	4,583	110	4,474
10	600	4.69	7.90	6,350	219	6,131
15	900	3.64	6.13	6,768	329	6,439
20	1,200	3.16	5.33	7,480	439	7,041
25	1,500	2.69	4.52	7,710	548	7,162
30	1,800	2.21	3.72	7,459	658	6,801
35	2,100	2.06	3.47	8,000	767	7,232
40	2,400	1.91	3.22	8,391	877	7,514
45	2,700	1.77	2.97	8,632	987	7,645
50	3,000	1.62	2.72	8,724	1096	7,627
55	3,300	1.47	2.47	8,665	1206	7,459
60	3,600	1.32	2.22	8,457	1316	7,141
65	3,900	1.27	2.14	8,778	1425	7,353
70	4,200	1.22	2.05	9,049	1535	7,514
75	4,500	1.17	1.97	9,269	1645	7,624
80	4,800	1.12	1.89	9,439	1754	7,685
85	5,100	1.07	1.80	9,558	1864	7,694
90	5,400	1.02	1.72	9,627	1973	7,653
95	5,700	0.97	1.63	9,645	2083	7,562
100	6,000	0.92	1.55	9,613	2193	7,420
105	6,300	0.87	1.47	9,530	2302	7,227
110	6,600	0.82	1.38	9,396	2412	6,984
115	6,900	0.77	1.30	9,212	2522	6,691
120	7,200	0.72	1.21	8,978	2631	6,347
180	10,800	0.50	0.84	9,248	3947	5,301
360	21,600	0.27	0.46	9,951	7894	2,058
720	43,200	0.15	0.26	11,111	15788	0
1440	86,400	0.09	0.14	12,543	31575	0

PROJECT:	**KN 24394 US20, Arco to Idaho Falls**			
BASIN:	2-3 R			
DESIGNER:	**BCC, DEA**	**REPORTS TO:**	**SW-5942-R**	
DATE:	**9/29/2025**			

[Linked Data]
[User Input Data]
[Calculated Data]

Bio-Infiltration Swales

Road Slope Swale (Priority 2):	**Roadside Slope A**		**Roadside Slope B**	
Base Width (feet):	2		2	
Sideslope 1: (_H:1V)	2		2	
Sideslope 2: (_H:V)	2		4	
Longitudinal Slope (ft/ft):	0.0233		0.0032	
Determination of Max Usable Swale Length Due to Slope:				
Max Water Depth At Downstream End (feet):	*1.5*		*1.5*	
Swale Volume (CF):	*194*		*1741*	
Length (feet):	*65*		*515*	
Determination of Length of Bermed Swales:				
Swale Length (feet):	60		250	
Storage Depth at U/S End (feet):	0.11		0.69	
Swale Volume (CF):	193		1490	
Infiltration Area Per Bermed Swale (SF):	313		2267	
Number of Bermed Swales:	36		2	
Total Swale Infiltration Area (SF):	11254		4534	
Total Swale Volume (CF):	6949		2980	
Available Length 1 (feet):	2160		515	
Proposed Length 2 (feet):	2160		500	
Difference (feet):	0	**OK! (Design> Req'd**	15	**OK! (Design> Req'd)**

Total Design Storage (CF):	**9,930**	
Total Infiltration Area (SF):	15,788	
Swale Infiltration Rate (cfs):	0.365	
Total Infiltration Rate (cfs):	0.365	
Total Time to Drain (Hrs):	5.85	
Required Treatment Volume:		
Basin Imp. Area x 0.5 inches /12 (CF)	2,451	**OK! (Design> Req'd)**
Required Storage Volume:		
Maximum Storage From Rational Column #7 (CF):	7,694	**OK! (Design> Req'd)**
Target Time to Drain:		
From Design Requirements (Hrs):	72	**OK! (Design<Req'd)**

PROJECT:	**KN 24394 US20, Arco to Idaho Falls**				**[Linked Data]**
BASIN:	2-4 R	Sta 5969-6009			**[User Input Data]**
DESIGNER:	**BCC, DEA**	**REPORTS TO:**	**SW-5969-R**		**[Calculated Data]**
DATE:	**9/29/2025**				

Basin Data

	SF	Acre	C
Impervious Area	87,953	2.019	0.9
Pervious Area	162,698	3.735	0.2
Total Area	250,651	5.754	

Composite "C"	0.45	
Area * "C"	2.564	
Time of Concentration:	10.00	min
25-Year Intensity	3.61	in/hr
50-Year Intensity	4.16	in/hr
100-year Intensity:	4.69	in/hr

Rational Method Peak Flows (Q=C*I*A)

25-year Peak	9.33	cfs
50-year Peak	10.76	cfs
100-year Peak	12.13	cfs

Selected Design Storm: 100-Year

Design Infiltration Rate (in/hr): 1.00

TIME OF CONCENTRATION (Minutes)

Tc (A) Channel or Pipe:

Shape (A) =	Trapezoidal	
L (A) =	200	ft
n(A) =	0.03	Grass Channel
S(A) =	0.009	ft/ft
R(A) =	0.57	ft
V(A) =	3.25	ft/s
Tc (A) =	1.02	min

Tc (B) Channel or Pipe:

Shape (B) =	Circular	
L (B) =	0	
n(B) =	0.013	Concrete
S(B) =	0.01	
R(B) =	0.50	
V(B) =	7.22	
Tc (B) =	0.00	

Tc (C) Shallow/Conc. Flow:

L (C) =	20	
S(C) =	1.00	%
k =	0.213	Short Grass
V (C) =	0.70	
Tc (C) =	0.48	

Tc (D) Sheet Flow:

L (D) =	22	
n(D) =	0.013	Asphalt
S(D) =	0.02	
Tc (D) Estimate =	0.66	<-- Change
Tc Esti. Total =	5.00	min. 5 mins
Resulting I (in/hr) =	6.77	
Tc (D) =	0.66	
		Goal Seek to 0
Tc(tot.) =	10.00	0.00
Intensity (in/hr)=	4.69	

PROJECT:	**KN 24394 US20, Arco to Idaho Falls**			
BASIN:	2-4 R	Sta 5969-6009		
DESIGNER:	**BCC, DEA**	**REPORTS TO:**	**SW-5969-R**	
DATE:	**9/29/2025**			

[Linked Data]
[User Input Data]
[Calculated Data]

MODIFIED RATIONAL METHOD (BOWSTRING) FOR REQUIRED DETENTION STORAGE

#1 Time Inc. (min.)	#2 Time Inc. (sec.) (#1*60)	#3 Intensity (in./hr.)	#4 Q dev. (cfs) (A*C*#3)	#5 V in (cu. ft.)	#6 V out (cu. ft.) (Outf.*#2)	#7 Req. Storage (cu. ft.) (#5-#6)
10.00	600.00	4.69	12.13	9,750	614	9,135
5	300	6.77	17.36	6,979	307	6,671
10	600	4.69	12.03	9,669	614	9,055
15	900	3.64	9.33	10,304	921	9,383
20	1,200	3.16	8.11	11,389	1229	10,160
25	1,500	2.69	6.89	11,739	1536	10,204
30	1,800	2.21	5.67	11,357	1843	9,514
35	2,100	2.06	5.29	12,180	2150	10,030
40	2,400	1.91	4.91	12,776	2457	10,319
45	2,700	1.77	4.53	13,143	2764	10,379
50	3,000	1.62	4.15	13,282	3071	10,211
55	3,300	1.47	3.77	13,193	3379	9,815
60	3,600	1.32	3.38	12,876	3686	9,190
65	3,900	1.27	3.26	13,365	3993	9,372
70	4,200	1.22	3.13	13,777	4300	9,477
75	4,500	1.17	3.00	14,113	4607	9,506
80	4,800	1.12	2.87	14,371	4914	9,457
85	5,100	1.07	2.74	14,553	5221	9,331
90	5,400	1.02	2.62	14,657	5528	9,129
95	5,700	0.97	2.49	14,685	5836	8,849
100	6,000	0.92	2.36	14,636	6143	8,493
105	6,300	0.87	2.23	14,510	6450	8,060
110	6,600	0.82	2.10	14,307	6757	7,549
115	6,900	0.77	1.97	14,026	7064	6,962
120	7,200	0.72	1.85	13,670	7371	6,298
180	10,800	0.50	1.28	14,080	11057	3,023
360	21,600	0.27	0.69	15,152	22114	0
720	43,200	0.15	0.39	16,917	44228	0
1440	86,400	0.09	0.22	19,098	88456	0

PROJECT:	**KN 24394 US20, Arco to Idaho Falls**				**[Linked Data]**
BASIN:	2-4 R	Sta 5969-6009			**[User Input Data]**
DESIGNER:	**BCC, DEA**	**REPORTS TO:**	**SW-5969-R**		**[Calculated Data]**
DATE:	**9/29/2025**				

Bio-Infiltration Swales

Road Slope Swale (Priority 2):	**Roadside Slope A**		**Roadside Slope B**	
Base Width (feet):	2		2	
Sideslope 1: (_H:1V)	2		2	
Sideslope 2: (_H:V)	4		2	
Longitudinal Slope (ft/ft):	0.0077		0.0058	
Determination of Max Usable Swale Length Due to Slope:				
Max Water Depth At Downstream End (feet):	*1.5*		*1.5*	
Swale Volume (CF):	*731*		*776*	
Length (feet):	*195*		*259*	
Determination of Length of Bermed Swales:				
Swale Length (feet):	190		250	
Storage Depth at U/S End (feet):	0.04		0.05	
Swale Volume (CF):	730		775	
Infiltration Area Per Bermed Swale (SF):	1256		1275	
Number of Bermed Swales:	21		14	
Total Swale Infiltration Area (SF):	26378		17850	
Total Swale Volume (CF):	15337		10856	
Available Length 1 (feet):	4000		0	
Proposed Length 2 (feet):	3990		3500	
Difference (feet):	10	**OK! (Design> Req'd**	-3500	**No Good (Design< Storage)**

Total Design Storage (CF):	**26,193**	
Total Infiltration Area (SF):	44,228	
Swale Infiltration Rate (cfs):	1.024	
Total Infiltration Rate (cfs):	1.024	
Total Time to Drain (Hrs):	2.82	
Required Treatment Volume:		
Basin Imp. Area x 0.5 inches /12 (CF)	3,665	**OK! (Design> Req'd)**
Required Storage Volume:		
Maximum Storage From Rational Column #7 (CF):	10,379	**OK! (Design> Req'd)**
Target Time to Drain:		
From Design Requirements (Hrs):	72	**OK! (Design<Req'd)**

PROJECT:	**KN 24394 US20, Arco to Idaho Falls**				**[Linked Data]**
BASIN:	2-4 R	Sta 6009-6025			**[User Input Data]**
DESIGNER:	**BCC, DEA**	**REPORTS TO:**	**SW-5969-R**		**[Calculated Data]**
DATE:	**9/29/2025**				

Basin Data

	SF	Acre	C
Impervious Area	35,181	0.808	0.9
Pervious Area	65,079	1.494	0.2
Total Area	100,260	2.302	

Composite "C"	0.45	
Area * "C"	1.026	

Time of Concentration:	10.00	min	**Rational Method Peak Flows (Q=C*I*A)**		
25-Year Intensity	3.61	in/hr	25-year Peak	3.73	cfs
50-Year Intensity	4.16	in/hr	50-year Peak	4.30	cfs
100-year Intensity:	4.69	in/hr	100-year Peak	4.85	cfs

Selected Design Storm: 100-Year

Design Infiltration Rate (in/hr): 1.00

TIME OF CONCENTRATION (Minutes)

Tc (A) Channel or Pipe:

Shape (A) =	Trapezoidal	
L (A) =	200	ft
n(A) =	0.03	Grass Channel
S(A) =	0.009	ft/ft
R(A) =	0.57	ft
V(A) =	3.25	ft/s
Tc (A) =	1.02	min

Tc (B) Channel or Pipe:

Shape (B) =	Circular	
L (B) =	0	
n(B) =	0.013	Concrete
S(B) =	0.01	
R(B) =	0.50	
V(B) =	7.22	
Tc (B) =	0.00	

Tc (C) Shallow/Conc. Flow:

L (C) =	20	
S(C) =	1.00	%
k =	0.213	Short Grass
V (C) =	0.70	
Tc (C) =	0.48	

Tc (D) Sheet Flow:

L (D) =	22	
n(D) =	0.013	Asphalt
S(D) =	0.02	
Tc (D) Estimate =	0.66	<-- Change
Tc Esti. Total =	5.00	min. 5 mins
Resulting I (in/hr) =	6.77	
Tc (D) =	0.66	
		Goal Seek to 0
Tc(tot.) =	10.00	0.00
Intensity (in/hr)=	4.69	

PROJECT:	**KN 24394 US20, Arco to Idaho Falls**			
BASIN:	2-4 R	Sta 6009-6025		
DESIGNER:	**BCC, DEA**	**REPORTS TO:**	**SW-5969-R**	
DATE:	**9/29/2025**			

[Linked Data]
[User Input Data]
[Calculated Data]

MODIFIED RATIONAL METHOD (BOWSTRING) FOR REQUIRED DETENTION STORAGE

#1 Time Inc. (min.)	#2 Time Inc. (sec.) (#1*60)	#3 Intensity (in./hr.)	#4 Q dev. (cfs) (A*C*#3)	#5 V in (cu. ft.)	#6 V out (cu. ft.) (Outf.*#2)	#7 Req. Storage (cu. ft.) (#5-#6)
10.00	600.00	4.69	4.85	3,900	411	3,489
5	300	6.77	6.94	2,791	205	2,586
10	600	4.69	4.81	3,868	411	3,457
15	900	3.64	3.73	4,122	616	3,506
20	1,200	3.16	3.24	4,555	821	3,734
25	1,500	2.69	2.76	4,696	1026	3,669
30	1,800	2.21	2.27	4,543	1232	3,311
35	2,100	2.06	2.11	4,872	1437	3,435
40	2,400	1.91	1.96	5,110	1642	3,468
45	2,700	1.77	1.81	5,257	1847	3,410
50	3,000	1.62	1.66	5,313	2053	3,260
55	3,300	1.47	1.51	5,277	2258	3,019
60	3,600	1.32	1.35	5,150	2463	2,687
65	3,900	1.27	1.30	5,346	2669	2,677
70	4,200	1.22	1.25	5,511	2874	2,637
75	4,500	1.17	1.20	5,645	3079	2,566
80	4,800	1.12	1.15	5,748	3284	2,464
85	5,100	1.07	1.10	5,821	3490	2,331
90	5,400	1.02	1.05	5,863	3695	2,168
95	5,700	0.97	0.99	5,874	3900	1,974
100	6,000	0.92	0.94	5,854	4105	1,749
105	6,300	0.87	0.89	5,804	4311	1,493
110	6,600	0.82	0.84	5,723	4516	1,207
115	6,900	0.77	0.79	5,611	4721	889
120	7,200	0.72	0.74	5,468	4927	541
180	10,800	0.50	0.51	5,632	7390	0
360	21,600	0.27	0.28	6,061	14780	0
720	43,200	0.15	0.16	6,767	29559	0
1440	86,400	0.09	0.09	7,639	59119	0

PROJECT:	**KN 24394 US20, Arco to Idaho Falls**				**[Linked Data]**
BASIN:	2-4 R	Sta 6009-6025			**[User Input Data]**
DESIGNER:	**BCC, DEA**	**REPORTS TO:**	**SW-5969-R**		**[Calculated Data]**
DATE:	**9/29/2025**				

Bio-Infiltration Swales

Road Slope Swale (Priority 2):	**Roadside Slope A**		**Roadside Slope B**	
Base Width (feet):	2		2	
Sideslope 1: (_H:1V)	2		2	
Sideslope 2: (_H:V)	4		2	
Longitudinal Slope (ft/ft):	0.0230		0.0058	
Determination of Max Usable Swale Length Due to Slope:				
Max Water Depth At Downstream End (feet):	*1.5*		*1.5*	
Swale Volume (CF):	*245*		*776*	
Length (feet):	*65*		*259*	
Determination of Length of Bermed Swales:				
Swale Length (feet):	50		250	
Storage Depth at U/S End (feet):	0.35		0.05	
Swale Volume (CF):	238		775	
Infiltration Area Per Bermed Swale (SF):	378		1275	
Number of Bermed Swales:	31		14	
Total Swale Infiltration Area (SF):	11709		17850	
Total Swale Volume (CF):	7366		10856	
Available Length 1 (feet):	1600		0	
Proposed Length 2 (feet):	1550		3500	
Difference (feet):	50	**OK! (Design> Req'd**	-3500	**No Good (Design< Storage)**

Total Design Storage (CF):	**18,222**	
Total Infiltration Area (SF):	29,559	
Swale Infiltration Rate (cfs):	0.684	
Total Infiltration Rate (cfs):	0.684	
Total Time to Drain (Hrs):	1.52	
Required Treatment Volume:		
Basin Imp. Area x 0.5 inches /12 (CF)	1,466	**OK! (Design> Req'd)**
Required Storage Volume:		
Maximum Storage From Rational Column #7 (CF):	3,734	**OK! (Design> Req'd)**
Target Time to Drain:		
From Design Requirements (Hrs):	72	**OK! (Design<Req'd)**

PROJECT:	**KN 24394 US20, Arco to Idaho Falls**				**[Linked Data]**
BASIN:	2-4 R	Sta 6025-6060			**[User Input Data]**
DESIGNER:	**BCC, DEA**	**REPORTS TO:**	**SW-5969-R**		**[Calculated Data]**
DATE:	**9/29/2025**				

Basin Data

	SF	Acre	C
Impervious Area	76,959	1.767	0.9
Pervious Area	142,360	3.268	0.2
Total Area	219,320	5.035	

Composite "C"	0.45	
Area * "C"	2.244	
Time of Concentration:	10.00	min
25-Year Intensity	3.61	in/hr
50-Year Intensity	4.16	in/hr
100-year Intensity:	4.69	in/hr

Rational Method Peak Flows (Q=C*I*A)

25-year Peak	8.17	cfs
50-year Peak	9.41	cfs
100-year Peak	10.61	cfs

Selected Design Storm: 100-Year

Design Infiltration Rate (in/hr): 1.00

TIME OF CONCENTRATION (Minutes)

Tc (A) Channel or Pipe:

Shape (A) =	Trapezoidal	
L (A) =	200	ft
n(A) =	0.03	Grass Channel
S(A) =	0.009	ft/ft
R(A) =	0.57	ft
V(A) =	3.25	ft/s
Tc (A) =	1.02	min

Tc (B) Channel or Pipe:

Shape (B) =	Circular	
L (B) =	0	
n(B) =	0.013	Concrete
S(B) =	0.01	
R(B) =	0.50	
V(B) =	7.22	
Tc (B) =	0.00	

Tc (C) Shallow/Conc. Flow:

L (C) =	20	
S(C) =	1.00	%
k =	0.213	Short Grass
V (C) =	0.70	
Tc (C) =	0.48	

Tc (D) Sheet Flow:

L (D) =	22	
n(D) =	0.013	Asphalt
S(D) =	0.02	
Tc (D) Estimate =	0.66	<-- Change
Tc Esti. Total =	5.00	min. 5 mins
Resulting I (in/hr) =	6.77	
Tc (D) =	0.66	
		Goal Seek to 0
Tc(tot.) =	10.00	0.00
Intensity (in/hr)=	4.69	

PROJECT:	**KN 24394 US20, Arco to Idaho Falls**			
BASIN:	2-4 R	Sta 6025-6060		
DESIGNER:	**BCC, DEA**	**REPORTS TO:**	**SW-5969-R**	
DATE:	**9/29/2025**			

[Linked Data]
[User Input Data]
[Calculated Data]

MODIFIED RATIONAL METHOD (BOWSTRING) FOR REQUIRED DETENTION STORAGE

#1 Time Inc. (min.)	#2 Time Inc. (sec.) (#1*60)	#3 Intensity (in./hr.)	#4 Q dev. (cfs) (A*C*#3)	#5 V in (cu. ft.)	#6 V out (cu. ft.) (Outf.*#2)	#7 Req. Storage (cu. ft.) (#5-#6)
10.00	600.00	4.69	10.61	8,531	305	8,226
5	300	6.77	15.19	6,106	153	5,954
10	600	4.69	10.52	8,460	305	8,155
15	900	3.64	8.17	9,016	458	8,558
20	1,200	3.16	7.10	9,965	611	9,354
25	1,500	2.69	6.03	10,272	763	9,508
30	1,800	2.21	4.96	9,937	916	9,021
35	2,100	2.06	4.63	10,658	1069	9,589
40	2,400	1.91	4.29	11,179	1222	9,957
45	2,700	1.77	3.96	11,500	1374	10,126
50	3,000	1.62	3.63	11,622	1527	10,095
55	3,300	1.47	3.29	11,544	1680	9,864
60	3,600	1.32	2.96	11,266	1832	9,434
65	3,900	1.27	2.85	11,694	1985	9,709
70	4,200	1.22	2.74	12,055	2138	9,917
75	4,500	1.17	2.63	12,349	2290	10,058
80	4,800	1.12	2.51	12,575	2443	10,132
85	5,100	1.07	2.40	12,734	2596	10,138
90	5,400	1.02	2.29	12,825	2749	10,077
95	5,700	0.97	2.18	12,849	2901	9,948
100	6,000	0.92	2.06	12,806	3054	9,752
105	6,300	0.87	1.95	12,696	3207	9,489
110	6,600	0.82	1.84	12,518	3359	9,159
115	6,900	0.77	1.73	12,273	3512	8,761
120	7,200	0.72	1.62	11,961	3665	8,296
180	10,800	0.50	1.12	12,320	5497	6,823
360	21,600	0.27	0.61	13,258	10994	2,264
720	43,200	0.15	0.34	14,803	21988	0
1440	86,400	0.09	0.19	16,711	43976	0

PROJECT:	**KN 24394 US20, Arco to Idaho Falls**				**[Linked Data]**
BASIN:	2-4 R	Sta 6025-6060			**[User Input Data]**
DESIGNER:	**BCC, DEA**	**REPORTS TO:**	**SW-5969-R**		**[Calculated Data]**
DATE:	**9/29/2025**				

Bio-Infiltration Swales

Road Slope Swale (Priority 2):	**Roadside Slope A**		**Roadside Slope B**	
Base Width (feet):	2		2	
Sideslope 1: (_H:1V)	2		2	
Sideslope 2: (_H:V)	4		2	
Longitudinal Slope (ft/ft):	0.0120		0.0000	
Determination of Max Usable Swale Length Due to Slope:				
Max Water Depth At Downstream End (feet):	*1.5*		*1.5*	
Swale Volume (CF):	*470*		*0*	
Length (feet):	*125*		*0*	
Determination of Length of Bermed Swales:				
Swale Length (feet):	125		0	
Storage Depth at U/S End (feet):	0.00		1.50	
Swale Volume (CF):	470		0	
Infiltration Area Per Bermed Swale (SF):	814		0	
Number of Bermed Swales:	27		0	
Total Swale Infiltration Area (SF):	21988		0	
Total Swale Volume (CF):	12699		0	
Available Length 1 (feet):	3500		0	
Proposed Length 2 (feet):	3375		0	
Difference (feet):	125	**OK! (Design> Req'd**	0	**No Good (Design< Storage)**

Total Design Storage (CF):	**12,699**	
Total Infiltration Area (SF):	21,988	
Swale Infiltration Rate (cfs):	0.509	
Total Infiltration Rate (cfs):	0.509	
Total Time to Drain (Hrs):	5.53	
Required Treatment Volume:		
Basin Imp. Area x 0.5 inches /12 (CF)	3,207	**OK! (Design> Req'd)**
Required Storage Volume:		
Maximum Storage From Rational Column #7 (CF):	10,138	**OK! (Design> Req'd)**
Target Time to Drain:		
From Design Requirements (Hrs):	72	**OK! (Design<Req'd)**

PROJECT:	**KN 24394 US20, Arco to Idaho Falls**				**[Linked Data]**
BASIN:	2-5 R	Sta 6060-6080			**[User Input Data]**
DESIGNER:	**BCC, DEA**	**REPORTS TO:**	**SW-6060-R**		**[Calculated Data]**
DATE:	**9/29/2025**				

Basin Data

	SF	Acre	C
Impervious Area	27,029	0.620	0.9
Pervious Area	84,124	1.931	0.2
Total Area	111,153	2.552	

Composite "C"	0.37	
Area * "C"	0.945	

			Rational Method Peak Flows (Q=C*I*A)		
Time of Concentration:	10.00	min			
25-Year Intensity	3.61	in/hr	25-year Peak	3.44	cfs
50-Year Intensity	4.16	in/hr	50-year Peak	3.96	cfs
100-year Intensity:	4.69	in/hr	100-year Peak	4.47	cfs

Selected Design Storm:	100-Year
Design Infiltration Rate (in/hr):	1.00

TIME OF CONCENTRATION (Minutes)

Tc (A) Channel or Pipe:

Shape (A) =	Trapezoidal	
L (A) =	200	ft
n(A) =	0.03	Grass Channel
S(A) =	0.009	ft/ft
R(A) =	0.57	ft
V(A) =	3.25	ft/s
Tc (A) =	1.02	min

Tc (B) Channel or Pipe:

Shape (B) =	Circular	
L (B) =	0	
n(B) =	0.013	Concrete
S(B) =	0.01	
R(B) =	0.50	
V(B) =	7.22	
Tc (B) =	0.00	

Tc (C) Shallow/Conc. Flow:

L (C) =	20	
S(C) =	1.00	%
k =	0.213	Short Grass
V (C) =	0.70	
Tc (C) =	0.48	

Tc (D) Sheet Flow:

L (D) =	22	
n(D) =	0.013	Asphalt
S(D) =	0.02	
Tc (D) Estimate =	0.66	<-- Change
Tc Esti. Total =	5.00	min. 5 mins
Resulting I (in/hr) =	6.77	
Tc (D) =	0.66	
		Goal Seek to 0
Tc(tot.) =	10.00	0.00
Intensity (in/hr)=	4.69	

PROJECT:	**KN 24394 US20, Arco to Idaho Falls**			
BASIN:	2-5 R	Sta 6060-6080		
DESIGNER:	**BCC, DEA**	**REPORTS TO:**	**SW-6060-R**	
DATE:	**9/29/2025**			

[Linked Data]
[User Input Data]
[Calculated Data]

MODIFIED RATIONAL METHOD (BOWSTRING) FOR REQUIRED DETENTION STORAGE

#1 Time Inc. (min.)	#2 Time Inc. (sec.) (#1*60)	#3 Intensity (in./hr.)	#4 Q dev. (cfs) (A*C*#3)	#5 V in (cu. ft.)	#6 V out (cu. ft.) (Outf.*#2)	#7 Req. Storage (cu. ft.) (#5-#6)
10.00	600.00	4.69	4.47	3,592	120	3,472
5	300	6.77	6.40	2,571	60	2,511
10	600	4.69	4.43	3,562	120	3,442
15	900	3.64	3.44	3,796	180	3,617
20	1,200	3.16	2.99	4,196	240	3,956
25	1,500	2.69	2.54	4,325	299	4,025
30	1,800	2.21	2.09	4,184	359	3,825
35	2,100	2.06	1.95	4,487	419	4,068
40	2,400	1.91	1.81	4,707	479	4,228
45	2,700	1.77	1.67	4,842	539	4,303
50	3,000	1.62	1.53	4,893	599	4,295
55	3,300	1.47	1.39	4,860	659	4,202
60	3,600	1.32	1.25	4,744	719	4,025
65	3,900	1.27	1.20	4,924	778	4,145
70	4,200	1.22	1.15	5,076	838	4,237
75	4,500	1.17	1.11	5,199	898	4,301
80	4,800	1.12	1.06	5,295	958	4,336
85	5,100	1.07	1.01	5,361	1018	4,343
90	5,400	1.02	0.96	5,400	1078	4,322
95	5,700	0.97	0.92	5,410	1138	4,272
100	6,000	0.92	0.87	5,392	1198	4,194
105	6,300	0.87	0.82	5,346	1257	4,088
110	6,600	0.82	0.77	5,271	1317	3,953
115	6,900	0.77	0.73	5,168	1377	3,790
120	7,200	0.72	0.68	5,036	1437	3,599
180	10,800	0.50	0.47	5,187	2156	3,032
360	21,600	0.27	0.26	5,582	4311	1,271
720	43,200	0.15	0.14	6,233	8622	0
1440	86,400	0.09	0.08	7,036	17245	0

PROJECT:	**KN 24394 US20, Arco to Idaho Falls**				**[Linked Data]**
BASIN:	2-5 R	Sta 6060-6080			**[User Input Data]**
DESIGNER:	**BCC, DEA**	**REPORTS TO:**	**SW-6060-R**		**[Calculated Data]**
DATE:	**9/29/2025**				

Bio-Infiltration Swales

Road Slope Swale (Priority 2):	**Roadside Slope A**		**Roadside Slope B**	
Base Width (feet):	2		2	
Sideslope 1: (_H:1V)	2		2	
Sideslope 2: (_H:V)	2		2	
Longitudinal Slope (ft/ft):	0.0026		0.0000	
Determination of Max Usable Swale Length Due to Slope:				
Max Water Depth At Downstream End (feet):	*1.5*		*1.5*	
Swale Volume (CF):	*1724*		*0*	
Length (feet):	*575*		*0*	
Determination of Length of Bermed Swales:				
Swale Length (feet):	575		0	
Storage Depth at U/S End (feet):	0.00		1.50	
Swale Volume (CF):	1724		0	
Infiltration Area Per Bermed Swale (SF):	2874		0	
Number of Bermed Swales:	3		0	
Total Swale Infiltration Area (SF):	8622		0	
Total Swale Volume (CF):	5172		0	
Available Length 1 (feet):	2000		0	
Proposed Length 2 (feet):	1725		0	
Difference (feet):	275	**OK! (Design> Req'd**	0	**No Good (Design< Storage)**

Total Design Storage (CF):	**5,172**	
Total Infiltration Area (SF):	8,622	
Swale Infiltration Rate (cfs):	0.200	
Total Infiltration Rate (cfs):	0.200	
Total Time to Drain (Hrs):	6.04	
Required Treatment Volume:		
Basin Imp. Area x 0.5 inches /12 (CF)	1,126	**OK! (Design> Req'd)**
Required Storage Volume:		
Maximum Storage From Rational Column #7 (CF):	4,343	**OK! (Design> Req'd)**
Target Time to Drain:		
From Design Requirements (Hrs):	72	**OK! (Design<Req'd)**

PROJECT:	**KN 24394 US20, Arco to Idaho Falls**				**[Linked Data]**
BASIN:	2-5 R	Sta 6080-6092			**[User Input Data]**
DESIGNER:	**BCC, DEA**	**REPORTS TO:**	**SW-6060-R**		**[Calculated Data]**
DATE:	**9/29/2025**				

Basin Data

	SF	Acre	C
Impervious Area	16,217	0.372	0.9
Pervious Area	50,475	1.159	0.2
Total Area	66,692	1.531	

Composite "C"	0.37	
Area * "C"	0.567	

			Rational Method Peak Flows (Q=C*I*A)		
Time of Concentration:	10.00	min			
25-Year Intensity	3.61	in/hr	25-year Peak	2.06	cfs
50-Year Intensity	4.16	in/hr	50-year Peak	2.38	cfs
100-year Intensity:	4.69	in/hr	100-year Peak	2.68	cfs

Selected Design Storm: 100-Year

Design Infiltration Rate (in/hr): 1.00

TIME OF CONCENTRATION (Minutes)

Tc (A) Channel or Pipe:

Shape (A) =	Trapezoidal	
L (A) =	200	ft
n(A) =	0.03	Grass Channel
S(A) =	0.009	ft/ft
R(A) =	0.57	ft
V(A) =	3.25	ft/s
Tc (A) =	1.02	min

Tc (B) Channel or Pipe:

Shape (B) =	Circular	
L (B) =	0	
n(B) =	0.013	Concrete
S(B) =	0.01	
R(B) =	0.50	
V(B) =	7.22	
Tc (B) =	0.00	

Tc (C) Shallow/Conc. Flow:

L (C) =	20	
S(C) =	1.00	%
k =	0.213	Short Grass
V (C) =	0.70	
Tc (C) =	0.48	

Tc (D) Sheet Flow:

L (D) =	22	
n(D) =	0.013	Asphalt
S(D) =	0.02	
Tc (D) Estimate =	0.66	<-- Change
Tc Esti. Total =	5.00	min. 5 mins
Resulting I (in/hr) =	6.77	
Tc (D) =	0.66	
		Goal Seek to 0
Tc(tot.) =	10.00	0.00
Intensity (in/hr)=	4.69	

PROJECT:	**KN 24394 US20, Arco to Idaho Falls**			
BASIN:	2-5 R	Sta 6080-6092		
DESIGNER:	**BCC, DEA**	**REPORTS TO:**	**SW-6060-R**	
DATE:	**9/29/2025**			

[Linked Data]
[User Input Data]
[Calculated Data]

MODIFIED RATIONAL METHOD (BOWSTRING) FOR REQUIRED DETENTION STORAGE

#1 Time Inc. (min.)	#2 Time Inc. (sec.) (#1*60)	#3 Intensity (in./hr.)	#4 Q dev. (cfs) (A*C*#3)	#5 V in (cu. ft.)	#6 V out (cu. ft.) (Outf.*#2)	#7 Req. Storage (cu. ft.) (#5-#6)
10.00	600.00	4.69	2.68	2,155	71	2,084
5	300	6.77	3.84	1,543	35	1,507
10	600	4.69	2.66	2,137	71	2,066
15	900	3.64	2.06	2,278	106	2,171
20	1,200	3.16	1.79	2,517	142	2,376
25	1,500	2.69	1.52	2,595	177	2,418
30	1,800	2.21	1.25	2,510	213	2,298
35	2,100	2.06	1.17	2,692	248	2,444
40	2,400	1.91	1.08	2,824	284	2,540
45	2,700	1.77	1.00	2,905	319	2,586
50	3,000	1.62	0.92	2,936	354	2,582
55	3,300	1.47	0.83	2,916	390	2,526
60	3,600	1.32	0.75	2,846	425	2,421
65	3,900	1.27	0.72	2,954	461	2,494
70	4,200	1.22	0.69	3,045	496	2,549
75	4,500	1.17	0.66	3,120	532	2,588
80	4,800	1.12	0.63	3,177	567	2,610
85	5,100	1.07	0.61	3,217	603	2,614
90	5,400	1.02	0.58	3,240	638	2,602
95	5,700	0.97	0.55	3,246	673	2,573
100	6,000	0.92	0.52	3,235	709	2,526
105	6,300	0.87	0.49	3,207	744	2,463
110	6,600	0.82	0.46	3,162	780	2,383
115	6,900	0.77	0.44	3,101	815	2,285
120	7,200	0.72	0.41	3,022	851	2,171
180	10,800	0.50	0.28	3,112	1276	1,836
360	21,600	0.27	0.15	3,349	2552	797
720	43,200	0.15	0.09	3,740	5104	0
1440	86,400	0.09	0.05	4,222	10208	0

PROJECT:	**KN 24394 US20, Arco to Idaho Falls**				**[Linked Data]**
BASIN:	2-5 R	Sta 6080-6092			**[User Input Data]**
DESIGNER:	**BCC, DEA**	**REPORTS TO:**	**SW-6060-R**		**[Calculated Data]**
DATE:	**9/29/2025**				

Bio-Infiltration Swales

Road Slope Swale (Priority 2):	**Roadside Slope A**		**Roadside Slope B**	
Base Width (feet):	2		2	
Sideslope 1: (_H:1V)	2		2	
Sideslope 2: (_H:V)	2		2	
Longitudinal Slope (ft/ft):	0.0072		0.0000	
Determination of Max Usable Swale Length Due to Slope:				
Max Water Depth At Downstream End (feet):	*1.5*		*1.5*	
Swale Volume (CF):	*622*		*0*	
Length (feet):	*207*		*0*	
Determination of Length of Bermed Swales:				
Swale Length (feet):	200		0	
Storage Depth at U/S End (feet):	0.05		1.50	
Swale Volume (CF):	621		0	
Infiltration Area Per Bermed Swale (SF):	1021		0	
Number of Bermed Swales:	5		0	
Total Swale Infiltration Area (SF):	5104		0	
Total Swale Volume (CF):	3106		0	
Available Length 1 (feet):	1200		0	
Proposed Length 2 (feet):	1000		0	
Difference (feet):	200	OK! (Design> Req'd	0	No Good (Design< Storage)

Total Design Storage (CF):	**3,106**	
Total Infiltration Area (SF):	5,104	
Swale Infiltration Rate (cfs):	0.118	
Total Infiltration Rate (cfs):	0.118	
Total Time to Drain (Hrs):	6.15	
Required Treatment Volume:		
Basin Imp. Area x 0.5 inches /12 (CF)	676	OK! (Design> Req'd)
Required Storage Volume:		
Maximum Storage From Rational Column #7 (CF):	2,614	OK! (Design> Req'd)
Target Time to Drain:		
From Design Requirements (Hrs):	72	OK! (Design<Req'd)

PROJECT:	**KN 24394 US20, Arco to Idaho Falls**				**[Linked Data]**
BASIN:	2-5 R	Sta 6092-6115			**[User Input Data]**
DESIGNER:	**BCC, DEA**	**REPORTS TO:**	**SW-6060-R**		**[Calculated Data]**
DATE:	**9/29/2025**				

Basin Data

	SF	Acre	C
Impervious Area	31,083	0.714	0.9
Pervious Area	96,743	2.221	0.2
Total Area	127,826	2.934	

Composite "C"	0.37	
Area * "C"	1.086	
Time of Concentration:	10.00	min
25-Year Intensity	3.61	in/hr
50-Year Intensity	4.16	in/hr
100-year Intensity:	4.69	in/hr

Rational Method Peak Flows (Q=C*I*A)

25-year Peak	3.95	cfs
50-year Peak	4.56	cfs
100-year Peak	5.14	cfs

Selected Design Storm: 100-Year

Design Infiltration Rate (in/hr): 1.00

TIME OF CONCENTRATION (Minutes)

Tc (A) Channel or Pipe:

Shape (A) =	Trapezoidal	
L (A) =	200	ft
n(A) =	0.03	Grass Channel
S(A) =	0.009	ft/ft
R(A) =	0.57	ft
V(A) =	3.25	ft/s
Tc (A) =	1.02	min

Tc (B) Channel or Pipe:

Shape (B) =	Circular	
L (B) =	0	
n(B) =	0.013	Concrete
S(B) =	0.01	
R(B) =	0.50	
V(B) =	7.22	
Tc (B) =	0.00	

Tc (C) Shallow/Conc. Flow:

L (C) =	20	
S(C) =	1.00	%
k =	0.213	Short Grass
V (C) =	0.70	
Tc (C) =	0.48	

Tc (D) Sheet Flow:

L (D) =	22	
n(D) =	0.013	Asphalt
S(D) =	0.02	
Tc (D) Estimate =	0.66	<-- Change
Tc Esti. Total =	5.00	min. 5 mins
Resulting I (in/hr) =	6.77	
Tc (D) =	0.66	
		Goal Seek to 0
Tc(tot.) =	10.00	0.00
Intensity (in/hr)=	4.69	

PROJECT:	**KN 24394 US20, Arco to Idaho Falls**			
BASIN:	2-5 R	Sta 6092-6115		
DESIGNER:	**BCC, DEA**	**REPORTS TO:**	**SW-6060-R**	
DATE:	**9/29/2025**			

[Linked Data]
[User Input Data]
[Calculated Data]

MODIFIED RATIONAL METHOD (BOWSTRING) FOR REQUIRED DETENTION STORAGE

#1 Time Inc. (min.)	#2 Time Inc. (sec.) (#1*60)	#3 Intensity (in./hr.)	#4 Q dev. (cfs) (A*C*#3)	#5 V in (cu. ft.)	#6 V out (cu. ft.) (Outf.*#2)	#7 Req. Storage (cu. ft.) (#5-#6)
10.00	600.00	4.69	5.14	4,131	153	3,977
5	300	6.77	7.35	2,957	77	2,880
10	600	4.69	5.10	4,097	153	3,943
15	900	3.64	3.95	4,366	230	4,136
20	1,200	3.16	3.44	4,825	307	4,518
25	1,500	2.69	2.92	4,974	383	4,590
30	1,800	2.21	2.40	4,811	460	4,351
35	2,100	2.06	2.24	5,160	537	4,624
40	2,400	1.91	2.08	5,413	614	4,799
45	2,700	1.77	1.92	5,568	690	4,878
50	3,000	1.62	1.76	5,627	767	4,860
55	3,300	1.47	1.60	5,590	844	4,746
60	3,600	1.32	1.43	5,455	920	4,535
65	3,900	1.27	1.38	5,662	997	4,665
70	4,200	1.22	1.33	5,837	1074	4,763
75	4,500	1.17	1.27	5,979	1150	4,829
80	4,800	1.12	1.22	6,089	1227	4,862
85	5,100	1.07	1.16	6,166	1304	4,862
90	5,400	1.02	1.11	6,210	1381	4,829
95	5,700	0.97	1.05	6,222	1457	4,764
100	6,000	0.92	1.00	6,201	1534	4,667
105	6,300	0.87	0.95	6,147	1611	4,537
110	6,600	0.82	0.89	6,061	1687	4,374
115	6,900	0.77	0.84	5,943	1764	4,179
120	7,200	0.72	0.78	5,791	1841	3,951
180	10,800	0.50	0.54	5,965	2761	3,204
360	21,600	0.27	0.29	6,419	5522	897
720	43,200	0.15	0.17	7,167	11044	0
1440	86,400	0.09	0.09	8,091	22088	0

PROJECT:	**KN 24394 US20, Arco to Idaho Falls**				**[Linked Data]**
BASIN:	2-5 R	Sta 6092-6115			**[User Input Data]**
DESIGNER:	**BCC, DEA**	**REPORTS TO:**	**SW-6060-R**		**[Calculated Data]**
DATE:	**9/29/2025**				

Bio-Infiltration Swales

Road Slope Swale (Priority 2):	**Roadside Slope A**		**Roadside Slope B**	
Base Width (feet):	2		2	
Sideslope 1: (_H:1V)	2		2	
Sideslope 2: (_H:V)	2		2	
Longitudinal Slope (ft/ft):	0.0149		0.0000	
Determination of Max Usable Swale Length Due to Slope:				
Max Water Depth At Downstream End (feet):	*1.5*		*1.5*	
Swale Volume (CF):	*302*		*0*	
Length (feet):	*101*		*0*	
Determination of Length of Bermed Swales:				
Swale Length (feet):	100		0	
Storage Depth at U/S End (feet):	0.01		1.50	
Swale Volume (CF):	302		0	
Infiltration Area Per Bermed Swale (SF):	502		0	
Number of Bermed Swales:	22		0	
Total Swale Infiltration Area (SF):	11044		0	
Total Swale Volume (CF):	6644		0	
Available Length 1 (feet):	2300		0	
Proposed Length 2 (feet):	2200		0	
Difference (feet):	100	**OK! (Design> Req'd**	0	**No Good (Design< Storage)**

Total Design Storage (CF):	**6,644**	
Total Infiltration Area (SF):	11,044	
Swale Infiltration Rate (cfs):	0.256	
Total Infiltration Rate (cfs):	0.256	
Total Time to Drain (Hrs):	5.30	
Required Treatment Volume:		
Basin Imp. Area x 0.5 inches /12 (CF)	1,295	**OK! (Design> Req'd)**
Required Storage Volume:		
Maximum Storage From Rational Column #7 (CF):	4,878	**OK! (Design> Req'd)**
Target Time to Drain:		
From Design Requirements (Hrs):	72	**OK! (Design<Req'd)**

PROJECT:	**KN 24394 US20, Arco to Idaho Falls**				**[Linked Data]**
BASIN:	2-5 R	Sta 6115-6137			**[User Input Data]**
DESIGNER:	**BCC, DEA**	**REPORTS TO:**	**SW-6060-R**		**[Calculated Data]**
DATE:	**9/29/2025**				

Basin Data

	SF	Acre	C
Impervious Area	29,732	0.683	0.9
Pervious Area	92,537	2.124	0.2
Total Area	122,268	2.807	

Composite "C"	0.37	
Area * "C"	1.039	

			Rational Method Peak Flows (Q=C*I*A)		
Time of Concentration:	10.00	min			
25-Year Intensity	3.61	in/hr	25-year Peak	3.78	cfs
50-Year Intensity	4.16	in/hr	50-year Peak	4.36	cfs
100-year Intensity:	4.69	in/hr	100-year Peak	4.91	cfs

Selected Design Storm: 100-Year

Design Infiltration Rate (in/hr): 1.00

TIME OF CONCENTRATION (Minutes)

Tc (A) Channel or Pipe:

Shape (A) =	Trapezoidal	
L (A) =	200	ft
n(A) =	0.03	Grass Channel
S(A) =	0.009	ft/ft
R(A) =	0.57	ft
V(A) =	3.25	ft/s
Tc (A) =	1.02	min

Tc (B) Channel or Pipe:

Shape (B) =	Circular	
L (B) =	0	
n(B) =	0.013	Concrete
S(B) =	0.01	
R(B) =	0.50	
V(B) =	7.22	
Tc (B) =	0.00	

Tc (C) Shallow/Conc. Flow:

L (C) =	20	
S(C) =	1.00	%
k =	0.213	Short Grass
V (C) =	0.70	
Tc (C) =	0.48	

Tc (D) Sheet Flow:

L (D) =	22	
n(D) =	0.013	Asphalt
S(D) =	0.02	
Tc (D) Estimate =	0.66	<-- Change
Tc Esti. Total =	5.00	min. 5 mins
Resulting I (in/hr) =	6.77	
Tc (D) =	0.66	
		Goal Seek to 0
Tc(tot.) =	10.00	0.00
Intensity (in/hr)=	4.69	

PROJECT:	**KN 24394 US20, Arco to Idaho Falls**			
BASIN:	2-5 R	Sta 6115-6137		
DESIGNER:	**BCC, DEA**	**REPORTS TO:**	**SW-6060-R**	
DATE:	**9/29/2025**			

[Linked Data]
[User Input Data]
[Calculated Data]

MODIFIED RATIONAL METHOD (BOWSTRING) FOR REQUIRED DETENTION STORAGE

#1 Time Inc. (min.)	#2 Time Inc. (sec.) (#1*60)	#3 Intensity (in./hr.)	#4 Q dev. (cfs) (A*C*#3)	#5 V in (cu. ft.)	#6 V out (cu. ft.) (Outf.*#2)	#7 Req. Storage (cu. ft.) (#5-#6)
10.00	600.00	4.69	4.91	3,951	140	3,812
5	300	6.77	7.04	2,828	70	2,758
10	600	4.69	4.87	3,918	140	3,779
15	900	3.64	3.78	4,176	209	3,967
20	1,200	3.16	3.29	4,615	279	4,336
25	1,500	2.69	2.79	4,757	349	4,408
30	1,800	2.21	2.30	4,602	419	4,184
35	2,100	2.06	2.14	4,936	488	4,448
40	2,400	1.91	1.99	5,177	558	4,619
45	2,700	1.77	1.83	5,326	628	4,698
50	3,000	1.62	1.68	5,383	698	4,685
55	3,300	1.47	1.53	5,347	768	4,579
60	3,600	1.32	1.37	5,218	837	4,381
65	3,900	1.27	1.32	5,416	907	4,509
70	4,200	1.22	1.27	5,583	977	4,606
75	4,500	1.17	1.22	5,719	1047	4,673
80	4,800	1.12	1.16	5,824	1116	4,707
85	5,100	1.07	1.11	5,898	1186	4,711
90	5,400	1.02	1.06	5,940	1256	4,684
95	5,700	0.97	1.01	5,951	1326	4,625
100	6,000	0.92	0.96	5,931	1396	4,536
105	6,300	0.87	0.90	5,880	1465	4,415
110	6,600	0.82	0.85	5,798	1535	4,263
115	6,900	0.77	0.80	5,684	1605	4,079
120	7,200	0.72	0.75	5,540	1675	3,865
180	10,800	0.50	0.52	5,706	2512	3,194
360	21,600	0.27	0.28	6,140	5024	1,116
720	43,200	0.15	0.16	6,856	10048	0
1440	86,400	0.09	0.09	7,740	20097	0

PROJECT:	**KN 24394 US20, Arco to Idaho Falls**				**[Linked Data]**
BASIN:	2-5 R	Sta 6115-6137			**[User Input Data]**
DESIGNER:	**BCC, DEA**	**REPORTS TO:**	**SW-6060-R**		**[Calculated Data]**
DATE:	**9/29/2025**				

Bio-Infiltration Swales

Road Slope Swale (Priority 2):	**Roadside Slope A**		**Roadside Slope B**	
Base Width (feet):	2		2	
Sideslope 1: (_H:1V)	2		2	
Sideslope 2: (_H:V)	2		2	
Longitudinal Slope (ft/ft):	0.0022		0.0000	
Determination of Max Usable Swale Length Due to Slope:				
Max Water Depth At Downstream End (feet):	*1.5*		*1.5*	
Swale Volume (CF):	*2055*		*0*	
Length (feet):	*685*		*0*	
Determination of Length of Bermed Swales:				
Swale Length (feet):	650		0	
Storage Depth at U/S End (feet):	0.08		1.50	
Swale Volume (CF):	2052		0	
Infiltration Area Per Bermed Swale (SF):	3349		0	
Number of Bermed Swales:	3		0	
Total Swale Infiltration Area (SF):	10048		0	
Total Swale Volume (CF):	6156		0	
Available Length 1 (feet):	2200		0	
Proposed Length 2 (feet):	1950		0	
Difference (feet):	250	**OK! (Design> Req'd**	0	**No Good (Design< Storage)**

Total Design Storage (CF):	**6,156**	
Total Infiltration Area (SF):	10,048	
Swale Infiltration Rate (cfs):	0.233	
Total Infiltration Rate (cfs):	0.233	
Total Time to Drain (Hrs):	5.63	
Required Treatment Volume:		
Basin Imp. Area x 0.5 inches /12 (CF)	1,239	**OK! (Design> Req'd)**
Required Storage Volume:		
Maximum Storage From Rational Column #7 (CF):	4,711	**OK! (Design> Req'd)**
Target Time to Drain:		
From Design Requirements (Hrs):	72	**OK! (Design<Req'd)**

PROJECT:	**KN 24394 US20, Arco to Idaho Falls**				**[Linked Data]**
BASIN:	2-6 R	Sta 6137-6159			**[User Input Data]**
DESIGNER:	**BCC, DEA**	**REPORTS TO:**	**SW-6137-R**		**[Calculated Data]**
DATE:	**9/29/2025**				

Basin Data

	SF	Acre	C
Impervious Area	64,443	1.479	0.9
Pervious Area	106,377	2.442	0.2
Total Area	170,820	3.921	

Composite "C"	0.46	
Area * "C"	1.820	
Time of Concentration:	10.00	min
25-Year Intensity	3.61	in/hr
50-Year Intensity	4.16	in/hr
100-year Intensity:	4.69	in/hr

Rational Method Peak Flows (Q=C*I*A)

25-year Peak	6.62	cfs
50-year Peak	7.63	cfs
100-year Peak	8.61	cfs

Selected Design Storm: 100-Year

Design Infiltration Rate (in/hr): 1.00

TIME OF CONCENTRATION (Minutes)

Tc (A) Channel or Pipe:

Shape (A) =	Trapezoidal	
L (A) =	200	ft
n(A) =	0.03	Grass Channel
S(A) =	0.009	ft/ft
R(A) =	0.57	ft
V(A) =	3.25	ft/s
Tc (A) =	1.02	min

Tc (B) Channel or Pipe:

Shape (B) =	Circular	
L (B) =	0	
n(B) =	0.013	Concrete
S(B) =	0.01	
R(B) =	0.50	
V(B) =	7.22	
Tc (B) =	0.00	

Tc (C) Shallow/Conc. Flow:

L (C) =	20	
S(C) =	1.00	%
k =	0.213	Short Grass
V (C) =	0.70	
Tc (C) =	0.48	

Tc (D) Sheet Flow:

L (D) =	22	
n(D) =	0.013	Asphalt
S(D) =	0.02	
Tc (D) Estimate =	0.66	<-- Change
Tc Esti. Total =	5.00	min. 5 mins
Resulting I (in/hr) =	6.77	
Tc (D) =	0.66	
		Goal Seek to 0
Tc(tot.) =	10.00	0.00
Intensity (in/hr)=	4.69	

PROJECT:	**KN 24394 US20, Arco to Idaho Falls**			
BASIN:	2-6 R	Sta 6137-6159		
DESIGNER:	**BCC, DEA**	**REPORTS TO:**	**SW-6137-R**	
DATE:	**9/29/2025**			

[Linked Data]
[User Input Data]
[Calculated Data]

MODIFIED RATIONAL METHOD (BOWSTRING) FOR REQUIRED DETENTION STORAGE

#1 Time Inc. (min.)	#2 Time Inc. (sec.) (#1*60)	#3 Intensity (in./hr.)	#4 Q dev. (cfs) (A*C*#3)	#5 V in (cu. ft.)	#6 V out (cu. ft.) (Outf.*#2)	#7 Req. Storage (cu. ft.) (#5-#6)
10.00	600.00	4.69	8.61	6,920	201	6,718
5	300	6.77	12.32	4,953	101	4,852
10	600	4.69	8.54	6,862	201	6,661
15	900	3.64	6.62	7,313	302	7,011
20	1,200	3.16	5.76	8,083	403	7,680
25	1,500	2.69	4.89	8,332	503	7,828
30	1,800	2.21	4.02	8,060	604	7,456
35	2,100	2.06	3.75	8,645	705	7,940
40	2,400	1.91	3.48	9,067	806	8,262
45	2,700	1.77	3.21	9,328	906	8,422
50	3,000	1.62	2.94	9,427	1007	8,420
55	3,300	1.47	2.67	9,363	1108	8,256
60	3,600	1.32	2.40	9,138	1208	7,930
65	3,900	1.27	2.31	9,485	1309	8,176
70	4,200	1.22	2.22	9,778	1410	8,368
75	4,500	1.17	2.13	10,016	1510	8,506
80	4,800	1.12	2.04	10,200	1611	8,588
85	5,100	1.07	1.95	10,328	1712	8,617
90	5,400	1.02	1.86	10,403	1813	8,590
95	5,700	0.97	1.77	10,422	1913	8,509
100	6,000	0.92	1.67	10,387	2014	8,373
105	6,300	0.87	1.58	10,298	2115	8,183
110	6,600	0.82	1.49	10,154	2215	7,938
115	6,900	0.77	1.40	9,955	2316	7,639
120	7,200	0.72	1.31	9,702	2417	7,285
180	10,800	0.50	0.91	9,993	3625	6,368
360	21,600	0.27	0.49	10,754	7250	3,503
720	43,200	0.15	0.28	12,007	14501	0
1440	86,400	0.09	0.16	13,554	29001	0

PROJECT:	**KN 24394 US20, Arco to Idaho Falls**				**[Linked Data]**
BASIN:	2-6 R	Sta 6137-6159			**[User Input Data]**
DESIGNER:	**BCC, DEA**	**REPORTS TO:**	**SW-6137-R**		**[Calculated Data]**
DATE:	**9/29/2025**				

Bio-Infiltration Swales

Road Slope Swale (Priority 2):	**Roadside Slope A**		**Roadside Slope B**	
Base Width (feet):	2		2	
Sideslope 1: (_H:1V)	2		2	
Sideslope 2: (_H:V)	4		2	
Longitudinal Slope (ft/ft):	0.0091		0.0000	
Determination of Max Usable Swale Length Due to Slope:				
Max Water Depth At Downstream End (feet):	*1.5*		*0.0*	
Swale Volume (CF):	*618*		*0*	
Length (feet):	*165*		*0*	
Determination of Length of Bermed Swales:				
Swale Length (feet):	150		0	
Storage Depth at U/S End (feet):	0.14		0.00	
Swale Volume (CF):	616		0	
Infiltration Area Per Bermed Swale (SF):	1036		0	
Number of Bermed Swales:	14		0	
Total Swale Infiltration Area (SF):	14501		0	
Total Swale Volume (CF):	8622		0	
Available Length 1 (feet):	2200		0	
Proposed Length 2 (feet):	2100		0	
Difference (feet):	100	**OK! (Design> Req'd**	0	**No Good (Design< Storage)**

Total Design Storage (CF):	**8,622**	
Total Infiltration Area (SF):	14,501	
Swale Infiltration Rate (cfs):	0.336	
Total Infiltration Rate (cfs):	0.336	
Total Time to Drain (Hrs):	7.13	
Required Treatment Volume:		
Basin Imp. Area x 0.5 inches /12 (CF)	2,685	**OK! (Design> Req'd)**
Required Storage Volume:		
Maximum Storage From Rational Column #7 (CF):	8,617	**OK! (Design> Req'd)**
Target Time to Drain:		
From Design Requirements (Hrs):	72	**OK! (Design<Req'd)**

PROJECT:	**KN 24394 US20, Arco to Idaho Falls**				**[Linked Data]**
BASIN:	2-6 R	Sta 6159-6185			**[User Input Data]**
DESIGNER:	**BCC, DEA**	**REPORTS TO:**	**SW-6137-R**		**[Calculated Data]**
DATE:	**9/29/2025**				

Basin Data

	SF	Acre	C
Impervious Area	76,160	1.748	0.9
Pervious Area	125,718	2.886	0.2
Total Area	201,878	4.634	

Composite "C"	0.46	
Area * "C"	2.151	

Time of Concentration:	10.00	min
25-Year Intensity	3.61	in/hr
50-Year Intensity	4.16	in/hr
100-year Intensity:	4.69	in/hr

Rational Method Peak Flows (Q=C*I*A)

25-year Peak	7.83	cfs
50-year Peak	9.02	cfs
100-year Peak	10.17	cfs

Selected Design Storm: 100-Year

Design Infiltration Rate (in/hr): 1.00

TIME OF CONCENTRATION (Minutes)

Tc (A) Channel or Pipe:

Shape (A) =	Trapezoidal	
L (A) =	200	ft
n(A) =	0.03	Grass Channel
S(A) =	0.009	ft/ft
R(A) =	0.57	ft
V(A) =	3.25	ft/s
Tc (A) =	1.02	min

Tc (B) Channel or Pipe:

Shape (B) =	Circular	
L (B) =	0	
n(B) =	0.013	Concrete
S(B) =	0.01	
R(B) =	0.50	
V(B) =	7.22	
Tc (B) =	0.00	

Tc (C) Shallow/Conc. Flow:

L (C) =	20	
S(C) =	1.00	%
k =	0.213	Short Grass
V (C) =	0.70	
Tc (C) =	0.48	

Tc (D) Sheet Flow:

L (D) =	22	
n(D) =	0.013	Asphalt
S(D) =	0.02	
Tc (D) Estimate =	0.66	<-- Change
Tc Esti. Total =	5.00	min. 5 mins
Resulting I (in/hr) =	6.77	
Tc (D) =	0.66	
		Goal Seek to 0
Tc(tot.) =	10.00	0.00
Intensity (in/hr)=	4.69	

PROJECT:	**KN 24394 US20, Arco to Idaho Falls**			
BASIN:	2-6 R	Sta 6159-6185		
DESIGNER:	**BCC, DEA**	**REPORTS TO:**	**SW-6137-R**	
DATE:	**9/29/2025**			

[Linked Data]
[User Input Data]
[Calculated Data]

MODIFIED RATIONAL METHOD (BOWSTRING) FOR REQUIRED DETENTION STORAGE

#1 Time Inc. (min.)	#2 Time Inc. (sec.) (#1*60)	#3 Intensity (in./hr.)	#4 Q dev. (cfs) (A*C*#3)	#5 V in (cu. ft.)	#6 V out (cu. ft.) (Outf.*#2)	#7 Req. Storage (cu. ft.) (#5-#6)
10.00	600.00	4.69	10.17	8,178	239	7,939
5	300	6.77	14.56	5,853	119	5,734
10	600	4.69	10.09	8,110	239	7,871
15	900	3.64	7.83	8,643	358	8,285
20	1,200	3.16	6.80	9,552	477	9,075
25	1,500	2.69	5.78	9,846	597	9,250
30	1,800	2.21	4.75	9,525	716	8,809
35	2,100	2.06	4.43	10,216	836	9,381
40	2,400	1.91	4.12	10,716	955	9,761
45	2,700	1.77	3.80	11,024	1074	9,950
50	3,000	1.62	3.48	11,141	1194	9,947
55	3,300	1.47	3.16	11,066	1313	9,753
60	3,600	1.32	2.84	10,800	1432	9,367
65	3,900	1.27	2.73	11,210	1552	9,658
70	4,200	1.22	2.62	11,556	1671	9,885
75	4,500	1.17	2.52	11,837	1790	10,047
80	4,800	1.12	2.41	12,054	1910	10,144
85	5,100	1.07	2.30	12,206	2029	10,177
90	5,400	1.02	2.19	12,294	2148	10,146
95	5,700	0.97	2.09	12,317	2268	10,049
100	6,000	0.92	1.98	12,276	2387	9,889
105	6,300	0.87	1.87	12,170	2507	9,664
110	6,600	0.82	1.76	12,000	2626	9,374
115	6,900	0.77	1.66	11,765	2745	9,020
120	7,200	0.72	1.55	11,466	2865	8,601
180	10,800	0.50	1.07	11,810	4297	7,513
360	21,600	0.27	0.58	12,709	8594	4,115
720	43,200	0.15	0.33	14,190	17188	0
1440	86,400	0.09	0.18	16,019	34375	0

PROJECT:	**KN 24394 US20, Arco to Idaho Falls**				**[Linked Data]**
BASIN:	2-6 R	Sta 6159-6185			**[User Input Data]**
DESIGNER:	**BCC, DEA**	**REPORTS TO:**	**SW-6137-R**		**[Calculated Data]**
DATE:	**9/29/2025**				

Bio-Infiltration Swales

Road Slope Swale (Priority 2):	**Roadside Slope A**		**Roadside Slope B**	
Base Width (feet):	2		2	
Sideslope 1: (_H:1V)	2		2	
Sideslope 2: (_H:V)	4		2	
Longitudinal Slope (ft/ft):	0.0110		0.0000	
Determination of Max Usable Swale Length Due to Slope:				
Max Water Depth At Downstream End (feet):	*1.5*		*0.0*	
Swale Volume (CF):	*511*		*0*	
Length (feet):	*136*		*0*	
Determination of Length of Bermed Swales:				
Swale Length (feet):	125		0	
Storage Depth at U/S End (feet):	0.13		0.00	
Swale Volume (CF):	510		0	
Infiltration Area Per Bermed Swale (SF):	859		0	
Number of Bermed Swales:	20		0	
Total Swale Infiltration Area (SF):	17188		0	
Total Swale Volume (CF):	10195		0	
Available Length 1 (feet):	2600		0	
Proposed Length 2 (feet):	2500		0	
Difference (feet):	100	**OK! (Design> Req'd**	0	**No Good (Design< Storage)**

Total Design Storage (CF):	**10,195**	
Total Infiltration Area (SF):	17,188	
Swale Infiltration Rate (cfs):	0.398	
Total Infiltration Rate (cfs):	0.398	
Total Time to Drain (Hrs):	7.11	
Required Treatment Volume:		
Basin Imp. Area x 0.5 inches /12 (CF)	3,173	**OK! (Design> Req'd)**
Required Storage Volume:		
Maximum Storage From Rational Column #7 (CF):	10,177	**OK! (Design> Req'd)**
Target Time to Drain:		
From Design Requirements (Hrs):	72	**OK! (Design<Req'd)**

PROJECT:	**KN 24394 US20, Arco to Idaho Falls**				**[Linked Data]**
BASIN:	2-6 R	Sta 6185-6221			**[User Input Data]**
DESIGNER:	**BCC, DEA**	**REPORTS TO:**	**SW-6137-R**		**[Calculated Data]**
DATE:	**9/29/2025**				

Basin Data

	SF	Acre	C
Impervious Area	106,917	2.454	0.9
Pervious Area	176,489	4.052	0.2
Total Area	283,406	6.506	

Composite "C"	0.46	
Area * "C"	3.019	
Time of Concentration:	10.00	min
25-Year Intensity	3.61	in/hr
50-Year Intensity	4.16	in/hr
100-year Intensity:	4.69	in/hr

Rational Method Peak Flows (Q=C*I*A)

25-year Peak	10.99	cfs
50-year Peak	12.67	cfs
100-year Peak	14.28	cfs

Selected Design Storm: 100-Year

Design Infiltration Rate (in/hr): 1.00

TIME OF CONCENTRATION (Minutes)

Tc (A) Channel or Pipe:

Shape (A) =	Trapezoidal	
L (A) =	200	ft
n(A) =	0.03	Grass Channel
S(A) =	0.009	ft/ft
R(A) =	0.57	ft
V(A) =	3.25	ft/s
Tc (A) =	1.02	min

Tc (B) Channel or Pipe:

Shape (B) =	Circular	
L (B) =	0	
n(B) =	0.013	Concrete
S(B) =	0.01	
R(B) =	0.50	
V(B) =	7.22	
Tc (B) =	0.00	

Tc (C) Shallow/Conc. Flow:

L (C) =	20	
S(C) =	1.00	%
k =	0.213	Short Grass
V (C) =	0.70	
Tc (C) =	0.48	

Tc (D) Sheet Flow:

L (D) =	22	
n(D) =	0.013	Asphalt
S(D) =	0.02	
Tc (D) Estimate =	0.66	<-- Change
Tc Esti. Total =	5.00	min. 5 mins
Resulting I (in/hr) =	6.77	
Tc (D) =	0.66	
		Goal Seek to 0
Tc(tot.) =	10.00	0.00
Intensity (in/hr)=	4.69	

PROJECT:	**KN 24394 US20, Arco to Idaho Falls**			
BASIN:	2-6 R	Sta 6185-6221		
DESIGNER:	**BCC, DEA**	**REPORTS TO:**	**SW-6137-R**	
DATE:	**9/29/2025**			

[Linked Data]
[User Input Data]
[Calculated Data]

MODIFIED RATIONAL METHOD (BOWSTRING) FOR REQUIRED DETENTION STORAGE

#1 Time Inc. (min.)	#2 Time Inc. (sec.) (#1*60)	#3 Intensity (in./hr.)	#4 Q dev. (cfs) (A*C*#3)	#5 V in (cu. ft.)	#6 V out (cu. ft.) (Outf.*#2)	#7 Req. Storage (cu. ft.) (#5-#6)
10.00	600.00	4.69	14.28	11,480	337	11,143
5	300	6.77	20.44	8,217	169	8,049
10	600	4.69	14.16	11,385	337	11,048
15	900	3.64	10.99	12,133	506	11,628
20	1,200	3.16	9.55	13,410	675	12,735
25	1,500	2.69	8.11	13,823	843	12,980
30	1,800	2.21	6.67	13,372	1012	12,360
35	2,100	2.06	6.22	14,342	1180	13,162
40	2,400	1.91	5.78	15,043	1349	13,694
45	2,700	1.77	5.33	15,476	1518	13,958
50	3,000	1.62	4.88	15,640	1686	13,953
55	3,300	1.47	4.43	15,535	1855	13,680
60	3,600	1.32	3.99	15,161	2024	13,137
65	3,900	1.27	3.83	15,737	2192	13,545
70	4,200	1.22	3.68	16,223	2361	13,862
75	4,500	1.17	3.53	16,618	2529	14,088
80	4,800	1.12	3.38	16,922	2698	14,224
85	5,100	1.07	3.23	17,136	2867	14,269
90	5,400	1.02	3.08	17,259	3035	14,223
95	5,700	0.97	2.93	17,292	3204	14,087
100	6,000	0.92	2.78	17,234	3373	13,861
105	6,300	0.87	2.63	17,085	3541	13,544
110	6,600	0.82	2.48	16,846	3710	13,136
115	6,900	0.77	2.32	16,516	3879	12,638
120	7,200	0.72	2.17	16,096	4047	12,049
180	10,800	0.50	1.51	16,579	6071	10,508
360	21,600	0.27	0.82	17,841	12142	5,699
720	43,200	0.15	0.46	19,920	24283	0
1440	86,400	0.09	0.26	22,488	48566	0

PROJECT:	**KN 24394 US20, Arco to Idaho Falls**				**[Linked Data]**
BASIN:	2-6 R	Sta 6185-6221			**[User Input Data]**
DESIGNER:	**BCC, DEA**	**REPORTS TO:**	**SW-6137-R**		**[Calculated Data]**
DATE:	**9/29/2025**				

Bio-Infiltration Swales

Road Slope Swale (Priority 2):	**Roadside Slope A**		**Roadside Slope B**	
Base Width (feet):	2		2	
Sideslope 1: (_H:1V)	2		2	
Sideslope 2: (_H:V)	4		2	
Longitudinal Slope (ft/ft):	0.0051		0.0000	
Determination of Max Usable Swale Length Due to Slope:				
Max Water Depth At Downstream End (feet):	*1.5*		*0.0*	
Swale Volume (CF):	*1103*		*0*	
Length (feet):	*294*		*0*	
Determination of Length of Bermed Swales:				
Swale Length (feet):	275		0	
Storage Depth at U/S End (feet):	0.10		0.00	
Swale Volume (CF):	1101		0	
Infiltration Area Per Bermed Swale (SF):	1868		0	
Number of Bermed Swales:	13		0	
Total Swale Infiltration Area (SF):	24283		0	
Total Swale Volume (CF):	14312		0	
Available Length 1 (feet):	3650		0	
Proposed Length 2 (feet):	3575		0	
Difference (feet):	75	**OK! (Design> Req'd**	0	**No Good (Design< Storage)**

Total Design Storage (CF):	**14,312**	
Total Infiltration Area (SF):	24,283	
Swale Infiltration Rate (cfs):	0.562	
Total Infiltration Rate (cfs):	0.562	
Total Time to Drain (Hrs):	7.05	
Required Treatment Volume:		
Basin Imp. Area x 0.5 inches /12 (CF)	4,455	**OK! (Design> Req'd)**
Required Storage Volume:		
Maximum Storage From Rational Column #7 (CF):	14,269	**OK! (Design> Req'd)**
Target Time to Drain:		
From Design Requirements (Hrs):	72	**OK! (Design<Req'd)**

PROJECT:	**KN 24394 US20, Arco to Idaho Falls**				**[Linked Data]**
BASIN:	2-7 R				**[User Input Data]**
DESIGNER:	**BCC, DEA**	**REPORTS TO:**	**SW-6221-R**		**[Calculated Data]**
DATE:	**9/29/2025**				

Basin Data

	SF	Acre	C
Impervious Area	109,261	2.508	0.9
Pervious Area	186,278	4.276	0.2
Total Area	295,538	6.785	

Composite "C"	0.46	
Area * "C"	3.113	
Time of Concentration:	10.00	min
25-Year Intensity	3.61	in/hr
50-Year Intensity	4.16	in/hr
100-year Intensity:	4.69	in/hr

Rational Method Peak Flows (Q=C*I*A)

25-year Peak	11.33	cfs
50-year Peak	13.06	cfs
100-year Peak	14.72	cfs

Selected Design Storm: 100-Year

Design Infiltration Rate (in/hr): 1.00

TIME OF CONCENTRATION (Minutes)

Tc (A) Channel or Pipe:

Shape (A) =	Trapezoidal	
L (A) =	200	ft
n(A) =	0.03	Grass Channel
S(A) =	0.009	ft/ft
R(A) =	0.57	ft
V(A) =	3.25	ft/s
Tc (A) =	1.02	min

Tc (B) Channel or Pipe:

Shape (B) =	Circular	
L (B) =	0	
n(B) =	0.013	Concrete
S(B) =	0.01	
R(B) =	0.50	
V(B) =	7.22	
Tc (B) =	0.00	

Tc (C) Shallow/Conc. Flow:

L (C) =	20	
S(C) =	1.00	%
k =	0.213	Short Grass
V (C) =	0.70	
Tc (C) =	0.48	

Tc (D) Sheet Flow:

L (D) =	22	
n(D) =	0.013	Asphalt
S(D) =	0.02	
Tc (D) Estimate =	0.66	<-- Change
Tc Esti. Total =	5.00	min. 5 mins
Resulting I (in/hr) =	6.77	
Tc (D) =	0.66	
		Goal Seek to 0
Tc(tot.) =	10.00	0.00
Intensity (in/hr)=	4.69	

PROJECT:	**KN 24394 US20, Arco to Idaho Falls**			
BASIN:	2-7 R			
DESIGNER:	**BCC, DEA**	**REPORTS TO:**	**SW-6221-R**	
DATE:	**9/29/2025**			

[Linked Data]
[User Input Data]
[Calculated Data]

MODIFIED RATIONAL METHOD (BOWSTRING) FOR REQUIRED DETENTION STORAGE

#1 Time Inc. (min.)	#2 Time Inc. (sec.) (#1*60)	#3 Intensity (in./hr.)	#4 Q dev. (cfs) (A*C*#3)	#5 V in (cu. ft.)	#6 V out (cu. ft.) (Outf.*#2)	#7 Req. Storage (cu. ft.) (#5-#6)
10.00	600.00	4.69	14.72	11,835	354	11,481
5	300	6.77	21.07	8,471	177	8,294
10	600	4.69	14.60	11,737	354	11,383
15	900	3.64	11.33	12,509	531	11,977
20	1,200	3.16	9.85	13,825	709	13,116
25	1,500	2.69	8.36	14,250	886	13,365
30	1,800	2.21	6.88	13,786	1063	12,723
35	2,100	2.06	6.42	14,786	1240	13,546
40	2,400	1.91	5.96	15,509	1417	14,092
45	2,700	1.77	5.49	15,954	1594	14,360
50	3,000	1.62	5.03	16,123	1771	14,352
55	3,300	1.47	4.57	16,015	1948	14,067
60	3,600	1.32	4.11	15,630	2126	13,504
65	3,900	1.27	3.95	16,224	2303	13,921
70	4,200	1.22	3.80	16,724	2480	14,244
75	4,500	1.17	3.64	17,131	2657	14,474
80	4,800	1.12	3.49	17,445	2834	14,611
85	5,100	1.07	3.33	17,666	3011	14,654
90	5,400	1.02	3.17	17,793	3188	14,604
95	5,700	0.97	3.02	17,826	3366	14,461
100	6,000	0.92	2.86	17,766	3543	14,224
105	6,300	0.87	2.71	17,613	3720	13,893
110	6,600	0.82	2.55	17,367	3897	13,470
115	6,900	0.77	2.40	17,027	4074	12,953
120	7,200	0.72	2.24	16,594	4251	12,342
180	10,800	0.50	1.55	17,092	6377	10,715
360	21,600	0.27	0.84	18,393	12754	5,639
720	43,200	0.15	0.47	20,536	25507	0
1440	86,400	0.09	0.27	23,183	51015	0

PROJECT:	**KN 24394 US20, Arco to Idaho Falls**				**[Linked Data]**
BASIN:	2-7 R				**[User Input Data]**
DESIGNER:	**BCC, DEA**	**REPORTS TO:**	**SW-6221-R**		**[Calculated Data]**
DATE:	**9/29/2025**				

Bio-Infiltration Swales

Road Slope Swale (Priority 2):	**Roadside Slope A**		**Roadside Slope B**	
Base Width (feet):	2		2	
Sideslope 1: (_H:1V)	2		2	
Sideslope 2: (_H:V)	4		4	
Longitudinal Slope (ft/ft):	0.0026		0.0045	
Determination of Max Usable Swale Length Due to Slope:				
Max Water Depth At Downstream End (feet):	*1.5*		*1.5*	
Swale Volume (CF):	*2163*		*1250*	
Length (feet):	*577*		*333*	
Determination of Length of Bermed Swales:				
Swale Length (feet):	550		325	
Storage Depth at U/S End (feet):	0.07		0.04	
Swale Volume (CF):	2161		1250	
Infiltration Area Per Bermed Swale (SF):	3691		2149	
Number of Bermed Swales:	4		5	
Total Swale Infiltration Area (SF):	14762		10745	
Total Swale Volume (CF):	8646		6248	
Available Length 1 (feet):	2347		1802	
Proposed Length 2 (feet):	2200		1625	
Difference (feet):	147	**OK! (Design> Req'd**	177	**OK! (Design> Req'd)**

Total Design Storage (CF):	**14,894**	
Total Infiltration Area (SF):	25,507	
Swale Infiltration Rate (cfs):	0.590	
Total Infiltration Rate (cfs):	0.590	
Total Time to Drain (Hrs):	6.89	
Required Treatment Volume:		
Basin Imp. Area x 0.5 inches /12 (CF)	4,553	**OK! (Design> Req'd)**
Required Storage Volume:		
Maximum Storage From Rational Column #7 (CF):	14,654	**OK! (Design> Req'd)**
Target Time to Drain:		
From Design Requirements (Hrs):	72	**OK! (Design<Req'd)**

PROJECT:	**KN 24394 US20, Arco to Idaho Falls**				**[Linked Data]**
BASIN:	2-8 R				**[User Input Data]**
DESIGNER:	**BCC, DEA**	**REPORTS TO:**	**SW-6263-R**		**[Calculated Data]**
DATE:	**9/29/2025**				

Basin Data

	SF	Acre	C
Impervious Area	57,763	1.326	0.9
Pervious Area	124,924	2.868	0.2
Total Area	182,687	4.194	

Composite "C"	0.42	
Area * "C"	1.767	
Time of Concentration:	10.00	min
25-Year Intensity	3.61	in/hr
50-Year Intensity	4.16	in/hr
100-year Intensity:	4.69	in/hr

Rational Method Peak Flows (Q=C*I*A)

25-year Peak	6.43	cfs
50-year Peak	7.41	cfs
100-year Peak	8.36	cfs

Selected Design Storm: 100-Year

Design Infiltration Rate (in/hr): 1.00

TIME OF CONCENTRATION (Minutes)

Tc (A) Channel or Pipe:

Shape (A) =	Trapezoidal	
L (A) =	200	ft
n(A) =	0.03	Grass Channel
S(A) =	0.009	ft/ft
R(A) =	0.57	ft
V(A) =	3.25	ft/s
Tc (A) =	1.02	min

Tc (B) Channel or Pipe:

Shape (B) =	Circular	
L (B) =	0	
n(B) =	0.013	Concrete
S(B) =	0.01	
R(B) =	0.50	
V(B) =	7.22	
Tc (B) =	0.00	

Tc (C) Shallow/Conc. Flow:

L (C) =	20	
S(C) =	1.00	%
k =	0.213	Short Grass
V (C) =	0.70	
Tc (C) =	0.48	

Tc (D) Sheet Flow:

L (D) =	22	
n(D) =	0.013	Asphalt
S(D) =	0.02	
Tc (D) Estimate =	0.66	<-- Change
Tc Esti. Total =	5.00	min. 5 mins
Resulting I (in/hr) =	6.77	
Tc (D) =	0.66	
		Goal Seek to 0
Tc(tot.) =	10.00	0.00
Intensity (in/hr)=	4.69	

PROJECT:	**KN 24394 US20, Arco to Idaho Falls**				**[Linked Data]**
BASIN:	2-8 R				**[User Input Data]**
DESIGNER:	**BCC, DEA**	**REPORTS TO:**	**SW-6263-R**		**[Calculated Data]**
DATE:	**9/29/2025**				

MODIFIED RATIONAL METHOD (BOWSTRING) FOR REQUIRED DETENTION STORAGE

#1 Time Inc. (min.)	#2 Time Inc. (sec.) (#1*60)	#3 Intensity (in./hr.)	#4 Q dev. (cfs) (A*C*#3)	#5 V in (cu. ft.)	#6 V out (cu. ft.) (Outf.*#2)	#7 Req. Storage (cu. ft.) (#5-#6)
10.00	600.00	4.69	8.36	6,719	187	6,532
5	300	6.77	11.96	4,809	93	4,716
10	600	4.69	8.29	6,663	187	6,476
15	900	3.64	6.43	7,101	280	6,821
20	1,200	3.16	5.59	7,848	373	7,475
25	1,500	2.69	4.75	8,090	466	7,623
30	1,800	2.21	3.91	7,826	560	7,266
35	2,100	2.06	3.64	8,393	653	7,741
40	2,400	1.91	3.38	8,804	746	8,058
45	2,700	1.77	3.12	9,057	839	8,218
50	3,000	1.62	2.86	9,153	933	8,220
55	3,300	1.47	2.59	9,091	1026	8,065
60	3,600	1.32	2.33	8,873	1119	7,754
65	3,900	1.27	2.24	9,210	1212	7,997
70	4,200	1.22	2.16	9,494	1306	8,188
75	4,500	1.17	2.07	9,725	1399	8,326
80	4,800	1.12	1.98	9,903	1492	8,411
85	5,100	1.07	1.89	10,028	1585	8,443
90	5,400	1.02	1.80	10,100	1679	8,422
95	5,700	0.97	1.71	10,120	1772	8,348
100	6,000	0.92	1.63	10,086	1865	8,220
105	6,300	0.87	1.54	9,999	1959	8,040
110	6,600	0.82	1.45	9,859	2052	7,807
115	6,900	0.77	1.36	9,666	2145	7,521
120	7,200	0.72	1.27	9,420	2238	7,181
180	10,800	0.50	0.88	9,703	3357	6,345
360	21,600	0.27	0.48	10,441	6715	3,726
720	43,200	0.15	0.27	11,658	13430	0
1440	86,400	0.09	0.15	13,161	26860	0

PROJECT:	**KN 24394 US20, Arco to Idaho Falls**				**[Linked Data]**
BASIN:	2-8 R				**[User Input Data]**
DESIGNER:	**BCC, DEA**	**REPORTS TO:**	**SW-6263-R**		**[Calculated Data]**
DATE:	**9/29/2025**				

Bio-Infiltration Swales

Road Slope Swale (Priority 2):	**Roadside Slope A**		**Roadside Slope B**	
Base Width (feet):	2		2	
Sideslope 1: (_H:1V)	2		2	
Sideslope 2: (_H:V)	4		4	
Longitudinal Slope (ft/ft):	0.0021		0.0019	
Determination of Max Usable Swale Length Due to Slope:				
Max Water Depth At Downstream End (feet):	*1.5*		*1.5*	
Swale Volume (CF):	*2679*		*2961*	
Length (feet):	*714*		*789*	
Determination of Length of Bermed Swales:				
Swale Length (feet):	700		525	
Storage Depth at U/S End (feet):	0.03		0.50	
Swale Volume (CF):	2678		2761	
Infiltration Area Per Bermed Swale (SF):	4613		4204	
Number of Bermed Swales:	2		1	
Total Swale Infiltration Area (SF):	9226		4204	
Total Swale Volume (CF):	5356		2761	
Available Length 1 (feet):	1786		1043	
Proposed Length 2 (feet):	1400		525	
Difference (feet):	386	**OK! (Design> Req'd**	518	**OK! (Design> Req'd)**

Total Design Storage (CF):	**8,117**	
Total Infiltration Area (SF):	13,430	
Swale Infiltration Rate (cfs):	0.311	
Total Infiltration Rate (cfs):	0.311	
Total Time to Drain (Hrs):	7.54	
Required Treatment Volume:		
Basin Imp. Area x 0.5 inches /12 (CF)	2,407	**OK! (Design> Req'd)**
Required Storage Volume:		
Maximum Storage From Rational Column #7 (CF):	8,443	**No Good (Design< Storage)**
Target Time to Drain:		
From Design Requirements (Hrs):	72	**OK! (Design<Req'd)**

PROJECT:	**KN 24394 US20, Arco to Idaho Falls**			
BASIN:	2-9 R	Sta 6289-6303		
DESIGNER:	**BCC, DEA**	**REPORTS TO:**	**SW-6289-R**	
DATE:	**9/29/2025**			

[Linked Data]
[User Input Data]
[Calculated Data]

Basin Data

	SF	Acre	C
Impervious Area	30,807	0.707	0.9
Pervious Area	65,468	1.503	0.2
Total Area	96,276	2.210	

Composite "C"	0.42
Area * "C"	0.937

Time of Concentration:	10.00	min
25-Year Intensity	3.61	in/hr
50-Year Intensity	4.16	in/hr
100-year Intensity:	4.69	in/hr

Rational Method Peak Flows (Q=C*I*A)

25-year Peak	3.41	cfs
50-year Peak	3.93	cfs
100-year Peak	4.43	cfs

Selected Design Storm: 100-Year

Design Infiltration Rate (in/hr): 1.00

TIME OF CONCENTRATION (Minutes)

Tc (A) Channel or Pipe:

Shape (A) =	Trapezoidal	
L (A) =	200	ft
n(A) =	0.03	Grass Channel
S(A) =	0.009	ft/ft
R(A) =	0.57	ft
V(A) =	3.25	ft/s
Tc (A) =	1.02	min

Tc (B) Channel or Pipe:

Shape (B) =	Circular	
L (B) =	0	
n(B) =	0.013	Concrete
S(B) =	0.01	
R(B) =	0.50	
V(B) =	7.22	
Tc (B) =	0.00	

Tc (C) Shallow/Conc. Flow:

L (C) =	20	
S(C) =	1.00	%
k =	0.213	Short Grass
V (C) =	0.70	
Tc (C) =	0.48	

Tc (D) Sheet Flow:

L (D) =	22	
n(D) =	0.013	Asphalt
S(D) =	0.02	
Tc (D) Estimate =	0.66	<-- Change
Tc Esti. Total =	5.00	min. 5 mins
Resulting I (in/hr) =	6.77	
Tc (D) =	0.66	
		Goal Seek to 0
Tc(tot.) =	10.00	0.00
Intensity (in/hr)=	4.69	

PROJECT:	**KN 24394 US20, Arco to Idaho Falls**			
BASIN:	2-9 R	Sta 6289-6303		
DESIGNER:	**BCC, DEA**	**REPORTS TO:**	**SW-6289-R**	
DATE:	**9/29/2025**			

[Linked Data]
[User Input Data]
[Calculated Data]

MODIFIED RATIONAL METHOD (BOWSTRING) FOR REQUIRED DETENTION STORAGE

#1 Time Inc. (min.)	#2 Time Inc. (sec.) (#1*60)	#3 Intensity (in./hr.)	#4 Q dev. (cfs) (A*C*#3)	#5 V in (cu. ft.)	#6 V out (cu. ft.) (Outf.*#2)	#7 Req. Storage (cu. ft.) (#5-#6)
10.00	600.00	4.69	4.43	3,563	109	3,454
5	300	6.77	6.34	2,550	55	2,496
10	600	4.69	4.40	3,534	109	3,424
15	900	3.64	3.41	3,766	164	3,602
20	1,200	3.16	2.96	4,162	219	3,943
25	1,500	2.69	2.52	4,290	273	4,017
30	1,800	2.21	2.07	4,150	328	3,822
35	2,100	2.06	1.93	4,451	383	4,069
40	2,400	1.91	1.79	4,669	437	4,232
45	2,700	1.77	1.65	4,803	492	4,311
50	3,000	1.62	1.51	4,854	547	4,307
55	3,300	1.47	1.38	4,821	601	4,220
60	3,600	1.32	1.24	4,705	656	4,049
65	3,900	1.27	1.19	4,884	711	4,174
70	4,200	1.22	1.14	5,035	765	4,270
75	4,500	1.17	1.10	5,158	820	4,338
80	4,800	1.12	1.05	5,252	875	4,377
85	5,100	1.07	1.00	5,318	929	4,389
90	5,400	1.02	0.96	5,357	984	4,373
95	5,700	0.97	0.91	5,367	1039	4,328
100	6,000	0.92	0.86	5,349	1093	4,255
105	6,300	0.87	0.82	5,303	1148	4,155
110	6,600	0.82	0.77	5,228	1203	4,026
115	6,900	0.77	0.72	5,126	1257	3,869
120	7,200	0.72	0.67	4,996	1312	3,684
180	10,800	0.50	0.47	5,146	1968	3,178
360	21,600	0.27	0.25	5,537	3936	1,601
720	43,200	0.15	0.14	6,182	7872	0
1440	86,400	0.09	0.08	6,980	15744	0

PROJECT:	**KN 24394 US20, Arco to Idaho Falls**				**[Linked Data]**
BASIN:	2-9 R	Sta 6289-6303			**[User Input Data]**
DESIGNER:	**BCC, DEA**	**REPORTS TO:**	**SW-6289-R**		**[Calculated Data]**
DATE:	**9/29/2025**				

Bio-Infiltration Swales

Road Slope Swale (Priority 2):	**Roadside Slope A**		**Roadside Slope B**	
Base Width (feet):	2		2	
Sideslope 1: (_H:1V)	2		2	
Sideslope 2: (_H:V)	4		0	
Longitudinal Slope (ft/ft):	0.0037			
Determination of Max Usable Swale Length Due to Slope:				
Max Water Depth At Downstream End (feet):	*1.5*		*1.5*	
Swale Volume (CF):	*1520*		*0*	
Length (feet):	*405*		*0*	
Determination of Length of Bermed Swales:				
Swale Length (feet):	400		0	
Storage Depth at U/S End (feet):	0.02		1.50	
Swale Volume (CF):	1520		0	
Infiltration Area Per Bermed Swale (SF):	2624		0	
Number of Bermed Swales:	3		0	
Total Swale Infiltration Area (SF):	7872		0	
Total Swale Volume (CF):	4560		0	
Available Length 1 (feet):	1400		0	
Proposed Length 2 (feet):	1200		0	
Difference (feet):	200	**OK! (Design> Req'd**	0	**No Good (Design< Storage)**

Total Design Storage (CF):	**4,560**	
Total Infiltration Area (SF):	7,872	
Swale Infiltration Rate (cfs):	0.182	
Total Infiltration Rate (cfs):	0.182	
Total Time to Drain (Hrs):	6.69	
Required Treatment Volume:		
Basin Imp. Area x 0.5 inches /12 (CF)	1,284	**OK! (Design> Req'd)**
Required Storage Volume:		
Maximum Storage From Rational Column #7 (CF):	4,389	**OK! (Design> Req'd)**
Target Time to Drain:		
From Design Requirements (Hrs):	72	**OK! (Design<Req'd)**

PROJECT:	**KN 24394 US20, Arco to Idaho Falls**				**[Linked Data]**
BASIN:	2-9 R	Sta 6303-6327			**[User Input Data]**
DESIGNER:	**BCC, DEA**	**REPORTS TO:**	**SW-6289-R**		**[Calculated Data]**
DATE:	**9/29/2025**				

Basin Data

	SF	Acre	C
Impervious Area	52,813	1.212	0.9
Pervious Area	112,232	2.576	0.2
Total Area	165,044	3.789	

Composite "C"	0.42	
Area * "C"	1.606	
Time of Concentration:	10.00	min
25-Year Intensity	3.61	in/hr
50-Year Intensity	4.16	in/hr
100-year Intensity:	4.69	in/hr

Rational Method Peak Flows (Q=C*I*A)

25-year Peak	5.85	cfs
50-year Peak	6.74	cfs
100-year Peak	7.60	cfs

Selected Design Storm: 100-Year

Design Infiltration Rate (in/hr): 1.00

TIME OF CONCENTRATION (Minutes)

Tc (A) Channel or Pipe:

Shape (A) =	Trapezoidal	
L (A) =	200	ft
n(A) =	0.03	Grass Channel
S(A) =	0.009	ft/ft
R(A) =	0.57	ft
V(A) =	3.25	ft/s
Tc (A) =	1.02	min

Tc (B) Channel or Pipe:

Shape (B) =	Circular	
L (B) =	0	
n(B) =	0.013	Concrete
S(B) =	0.01	
R(B) =	0.50	
V(B) =	7.22	
Tc (B) =	0.00	

Tc (C) Shallow/Conc. Flow:

L (C) =	20	
S(C) =	1.00	%
k =	0.213	Short Grass
V (C) =	0.70	
Tc (C) =	0.48	

Tc (D) Sheet Flow:

L (D) =	22	
n(D) =	0.013	Asphalt
S(D) =	0.02	
Tc (D) Estimate =	0.66	<-- Change
Tc Esti. Total =	5.00	min. 5 mins
Resulting I (in/hr) =	6.77	
Tc (D) =	0.66	
		Goal Seek to 0
Tc(tot.) =	10.00	0.00
Intensity (in/hr)=	4.69	

PROJECT:	**KN 24394 US20, Arco to Idaho Falls**			
BASIN:	2-9 R	Sta 6303-6327		
DESIGNER:	**BCC, DEA**	**REPORTS TO:**	**SW-6289-R**	
DATE:	**9/29/2025**			

[Linked Data]
[User Input Data]
[Calculated Data]

MODIFIED RATIONAL METHOD (BOWSTRING) FOR REQUIRED DETENTION STORAGE

#1 Time Inc. (min.)	#2 Time Inc. (sec.) (#1*60)	#3 Intensity (in./hr.)	#4 Q dev. (cfs) (A*C*#3)	#5 V in (cu. ft.)	#6 V out (cu. ft.) (Outf.*#2)	#7 Req. Storage (cu. ft.) (#5-#6)
10.00	600.00	4.69	7.60	6,108	190	5,918
5	300	6.77	10.88	4,372	95	4,277
10	600	4.69	7.53	6,058	190	5,868
15	900	3.64	5.85	6,456	285	6,171
20	1,200	3.16	5.08	7,135	380	6,755
25	1,500	2.69	4.32	7,355	475	6,880
30	1,800	2.21	3.55	7,115	569	6,545
35	2,100	2.06	3.31	7,631	664	6,967
40	2,400	1.91	3.07	8,004	759	7,245
45	2,700	1.77	2.84	8,234	854	7,380
50	3,000	1.62	2.60	8,321	949	7,372
55	3,300	1.47	2.36	8,265	1044	7,221
60	3,600	1.32	2.12	8,067	1139	6,928
65	3,900	1.27	2.04	8,373	1234	7,139
70	4,200	1.22	1.96	8,631	1329	7,303
75	4,500	1.17	1.88	8,841	1424	7,418
80	4,800	1.12	1.80	9,003	1518	7,485
85	5,100	1.07	1.72	9,117	1613	7,504
90	5,400	1.02	1.64	9,183	1708	7,474
95	5,700	0.97	1.56	9,200	1803	7,397
100	6,000	0.92	1.48	9,169	1898	7,271
105	6,300	0.87	1.40	9,090	1993	7,097
110	6,600	0.82	1.32	8,963	2088	6,875
115	6,900	0.77	1.24	8,787	2183	6,605
120	7,200	0.72	1.16	8,564	2278	6,286
180	10,800	0.50	0.80	8,821	3416	5,405
360	21,600	0.27	0.44	9,492	6833	2,660
720	43,200	0.15	0.24	10,599	13666	0
1440	86,400	0.09	0.14	11,965	27331	0

PROJECT:	**KN 24394 US20, Arco to Idaho Falls**				**[Linked Data]**
BASIN:	2-9 R	Sta 6303-6327			**[User Input Data]**
DESIGNER:	**BCC, DEA**	**REPORTS TO:**	**SW-6289-R**		**[Calculated Data]**
DATE:	**9/29/2025**				

Bio-Infiltration Swales

Road Slope Swale (Priority 2):	**Roadside Slope A**		**Roadside Slope B**	
Base Width (feet):	2		2	
Sideslope 1: (_H:1V)	2		2	
Sideslope 2: (_H:V)	4		0	
Longitudinal Slope (ft/ft):	0.0114			
Determination of Max Usable Swale Length Due to Slope:				
Max Water Depth At Downstream End (feet):	*1.5*		*1.5*	
Swale Volume (CF):	*495*		*0*	
Length (feet):	*132*		*0*	
Determination of Length of Bermed Swales:				
Swale Length (feet):	100		0	
Storage Depth at U/S End (feet):	0.36		1.50	
Swale Volume (CF):	479		0	
Infiltration Area Per Bermed Swale (SF):	759		0	
Number of Bermed Swales:	18		0	
Total Swale Infiltration Area (SF):	13666		0	
Total Swale Volume (CF):	8626		0	
Available Length 1 (feet):	2400		0	
Proposed Length 2 (feet):	1800		0	
Difference (feet):	600	**OK! (Design> Req'd**	0	**No Good (Design< Storage)**

Total Design Storage (CF):	**8,626**	
Total Infiltration Area (SF):	13,666	
Swale Infiltration Rate (cfs):	0.316	
Total Infiltration Rate (cfs):	0.316	
Total Time to Drain (Hrs):	6.59	
Required Treatment Volume:		
Basin Imp. Area x 0.5 inches /12 (CF)	2,201	**OK! (Design> Req'd)**
Required Storage Volume:		
Maximum Storage From Rational Column #7 (CF):	7,504	**OK! (Design> Req'd)**
Target Time to Drain:		
From Design Requirements (Hrs):	72	**OK! (Design<Req'd)**

PROJECT:	**KN 24394 US20, Arco to Idaho Falls**				**[Linked Data]**
BASIN:	2-9 R	Sta 6327-6342			**[User Input Data]**
DESIGNER:	**BCC, DEA**	**REPORTS TO:**	**SW-6289-R**		**[Calculated Data]**
DATE:	**9/29/2025**				

Basin Data

	SF	Acre	C
Impervious Area	33,008	0.758	0.9
Pervious Area	70,145	1.610	0.2
Total Area	103,153	2.368	

Composite "C"	0.42	
Area * "C"	1.004	

			Rational Method Peak Flows (Q=C*I*A)		
Time of Concentration:	10.00	min			
25-Year Intensity	3.61	in/hr	25-year Peak	3.65	cfs
50-Year Intensity	4.16	in/hr	50-year Peak	4.21	cfs
100-year Intensity:	4.69	in/hr	100-year Peak	4.75	cfs

Selected Design Storm: 100-Year

Design Infiltration Rate (in/hr): 1.00

TIME OF CONCENTRATION (Minutes)

Tc (A) Channel or Pipe:

Shape (A) =	Trapezoidal	
L (A) =	200	ft
n(A) =	0.03	Grass Channel
S(A) =	0.009	ft/ft
R(A) =	0.57	ft
V(A) =	3.25	ft/s
Tc (A) =	1.02	min

Tc (B) Channel or Pipe:

Shape (B) =	Circular	
L (B) =	0	
n(B) =	0.013	Concrete
S(B) =	0.01	
R(B) =	0.50	
V(B) =	7.22	
Tc (B) =	0.00	

Tc (C) Shallow/Conc. Flow:

L (C) =	20	
S(C) =	1.00	%
k =	0.213	Short Grass
V (C) =	0.70	
Tc (C) =	0.48	

Tc (D) Sheet Flow:

L (D) =	22	
n(D) =	0.013	Asphalt
S(D) =	0.02	
Tc (D) Estimate =	0.66	<-- Change
Tc Esti. Total =	5.00	min. 5 mins
Resulting I (in/hr) =	6.77	
Tc (D) =	0.66	
		Goal Seek to 0
Tc(tot.) =	10.00	0.00
Intensity (in/hr)=	4.69	

PROJECT:	**KN 24394 US20, Arco to Idaho Falls**			
BASIN:	2-9 R	Sta 6327-6342		
DESIGNER:	**BCC, DEA**	**REPORTS TO:**	**SW-6289-R**	
DATE:	**9/29/2025**			

[Linked Data]
[User Input Data]
[Calculated Data]

MODIFIED RATIONAL METHOD (BOWSTRING) FOR REQUIRED DETENTION STORAGE

#1 Time Inc. (min.)	#2 Time Inc. (sec.) (#1*60)	#3 Intensity (in./hr.)	#4 Q dev. (cfs) (A*C*#3)	#5 V in (cu. ft.)	#6 V out (cu. ft.) (Outf.*#2)	#7 Req. Storage (cu. ft.) (#5-#6)
10.00	600.00	4.69	4.75	3,818	132	3,685
5	300	6.77	6.80	2,733	66	2,666
10	600	4.69	4.71	3,786	132	3,654
15	900	3.64	3.65	4,035	199	3,836
20	1,200	3.16	3.18	4,459	265	4,194
25	1,500	2.69	2.70	4,597	331	4,266
30	1,800	2.21	2.22	4,447	397	4,050
35	2,100	2.06	2.07	4,769	463	4,306
40	2,400	1.91	1.92	5,002	530	4,473
45	2,700	1.77	1.77	5,146	596	4,550
50	3,000	1.62	1.62	5,201	662	4,539
55	3,300	1.47	1.47	5,166	728	4,438
60	3,600	1.32	1.33	5,042	794	4,247
65	3,900	1.27	1.28	5,233	861	4,373
70	4,200	1.22	1.22	5,395	927	4,468
75	4,500	1.17	1.17	5,526	993	4,533
80	4,800	1.12	1.12	5,627	1059	4,568
85	5,100	1.07	1.07	5,698	1125	4,573
90	5,400	1.02	1.02	5,739	1192	4,548
95	5,700	0.97	0.97	5,750	1258	4,492
100	6,000	0.92	0.92	5,731	1324	4,407
105	6,300	0.87	0.87	5,681	1390	4,291
110	6,600	0.82	0.82	5,602	1456	4,145
115	6,900	0.77	0.77	5,492	1523	3,970
120	7,200	0.72	0.72	5,352	1589	3,764
180	10,800	0.50	0.50	5,513	2383	3,130
360	21,600	0.27	0.27	5,933	4766	1,166
720	43,200	0.15	0.15	6,624	9533	0
1440	86,400	0.09	0.09	7,478	19066	0

PROJECT:	**KN 24394 US20, Arco to Idaho Falls**				**[Linked Data]**
BASIN:	2-9 R	Sta 6327-6342			**[User Input Data]**
DESIGNER:	**BCC, DEA**	**REPORTS TO:**	**SW-6289-R**		**[Calculated Data]**
DATE:	**9/29/2025**				

Bio-Infiltration Swales

Road Slope Swale (Priority 2):	**Roadside Slope A**		**Roadside Slope B**	
Base Width (feet):	2		2	
Sideslope 1: (_H:1V)	2		2	
Sideslope 2: (_H:V)	4		0	
Longitudinal Slope (ft/ft):	0.0183			
Determination of Max Usable Swale Length Due to Slope:				
Max Water Depth At Downstream End (feet):	*1.5*		*1.5*	
Swale Volume (CF):	*308*		*0*	
Length (feet):	*82*		*0*	
Determination of Length of Bermed Swales:				
Swale Length (feet):	80		0	
Storage Depth at U/S End (feet):	0.04		1.50	
Swale Volume (CF):	308		0	
Infiltration Area Per Bermed Swale (SF):	530		0	
Number of Bermed Swales:	18		0	
Total Swale Infiltration Area (SF):	9533		0	
Total Swale Volume (CF):	5546		0	
Available Length 1 (feet):	1500		0	
Proposed Length 2 (feet):	1440		0	
Difference (feet):	60	**OK! (Design> Req'd**	0	**No Good (Design< Storage)**

Total Design Storage (CF):	**5,546**	
Total Infiltration Area (SF):	9,533	
Swale Infiltration Rate (cfs):	0.221	
Total Infiltration Rate (cfs):	0.221	
Total Time to Drain (Hrs):	5.76	
Required Treatment Volume:		
Basin Imp. Area x 0.5 inches /12 (CF)	1,375	**OK! (Design> Req'd)**
Required Storage Volume:		
Maximum Storage From Rational Column #7 (CF):	4,573	**OK! (Design> Req'd)**
Target Time to Drain:		
From Design Requirements (Hrs):	72	**OK! (Design<Req'd)**

PROJECT:	**KN 24394 US20, Arco to Idaho Falls**				**[Linked Data]**
BASIN:	2-9 R	Sta 6342-6367			**[User Input Data]**
DESIGNER:	**BCC, DEA**	**REPORTS TO:**	**SW-6289-R**		**[Calculated Data]**
DATE:	**9/29/2025**				

Basin Data

	SF	Acre	C
Impervious Area	55,013	1.263	0.9
Pervious Area	116,908	2.684	0.2
Total Area	171,921	3.947	

Composite "C"	0.42	
Area * "C"	1.673	

Time of Concentration:	10.00	min	**Rational Method Peak Flows (Q=C*I*A)**		
25-Year Intensity	3.61	in/hr	25-year Peak	6.09	cfs
50-Year Intensity	4.16	in/hr	50-year Peak	7.02	cfs
100-year Intensity:	4.69	in/hr	100-year Peak	7.91	cfs

Selected Design Storm: 100-Year

Design Infiltration Rate (in/hr): 1.00

TIME OF CONCENTRATION (Minutes)

Tc (A) Channel or Pipe:

Shape (A) =	Trapezoidal	
L (A) =	200	ft
n(A) =	0.03	Grass Channel
S(A) =	0.009	ft/ft
R(A) =	0.57	ft
V(A) =	3.25	ft/s
Tc (A) =	1.02	min

Tc (B) Channel or Pipe:

Shape (B) =	Circular	
L (B) =	0	
n(B) =	0.013	Concrete
S(B) =	0.01	
R(B) =	0.50	
V(B) =	7.22	
Tc (B) =	0.00	

Tc (C) Shallow/Conc. Flow:

L (C) =	20	
S(C) =	1.00	%
k =	0.213	Short Grass
V (C) =	0.70	
Tc (C) =	0.48	

Tc (D) Sheet Flow:

L (D) =	22	
n(D) =	0.013	Asphalt
S(D) =	0.02	
Tc (D) Estimate =	0.66	<-- Change
Tc Esti. Total =	5.00	min. 5 mins
Resulting I (in/hr) =	6.77	
Tc (D) =	0.66	
		Goal Seek to 0
Tc(tot.) =	10.00	0.00
Intensity (in/hr)=	4.69	

PROJECT:	**KN 24394 US20, Arco to Idaho Falls**			
BASIN:	2-9 R	Sta 6342-6367		
DESIGNER:	**BCC, DEA**	**REPORTS TO:**	**SW-6289-R**	
DATE:	**9/29/2025**			

[Linked Data]
[User Input Data]
[Calculated Data]

MODIFIED RATIONAL METHOD (BOWSTRING) FOR REQUIRED DETENTION STORAGE

#1 Time Inc. (min.)	#2 Time Inc. (sec.) (#1*60)	#3 Intensity (in./hr.)	#4 Q dev. (cfs) (A*C*#3)	#5 V in (cu. ft.)	#6 V out (cu. ft.) (Outf.*#2)	#7 Req. Storage (cu. ft.) (#5-#6)
10.00	600.00	4.69	7.91	6,363	217	6,146
5	300	6.77	11.33	4,554	108	4,446
10	600	4.69	7.85	6,310	217	6,093
15	900	3.64	6.09	6,725	325	6,400
20	1,200	3.16	5.29	7,432	433	6,999
25	1,500	2.69	4.50	7,661	542	7,119
30	1,800	2.21	3.70	7,411	650	6,761
35	2,100	2.06	3.45	7,949	758	7,190
40	2,400	1.91	3.20	8,337	867	7,471
45	2,700	1.77	2.95	8,577	975	7,602
50	3,000	1.62	2.71	8,668	1083	7,585
55	3,300	1.47	2.46	8,610	1192	7,418
60	3,600	1.32	2.21	8,403	1300	7,103
65	3,900	1.27	2.13	8,722	1408	7,314
70	4,200	1.22	2.04	8,991	1517	7,474
75	4,500	1.17	1.96	9,210	1625	7,585
80	4,800	1.12	1.87	9,379	1733	7,645
85	5,100	1.07	1.79	9,497	1842	7,655
90	5,400	1.02	1.71	9,565	1950	7,615
95	5,700	0.97	1.62	9,583	2058	7,525
100	6,000	0.92	1.54	9,551	2167	7,385
105	6,300	0.87	1.46	9,469	2275	7,194
110	6,600	0.82	1.37	9,336	2383	6,953
115	6,900	0.77	1.29	9,154	2492	6,662
120	7,200	0.72	1.20	8,921	2600	6,321
180	10,800	0.50	0.84	9,189	3900	5,289
360	21,600	0.27	0.45	9,888	7800	2,088
720	43,200	0.15	0.25	11,040	15600	0
1440	86,400	0.09	0.14	12,463	31200	0

PROJECT:	**KN 24394 US20, Arco to Idaho Falls**				**[Linked Data]**
BASIN:	2-9 R	Sta 6342-6367			**[User Input Data]**
DESIGNER:	**BCC, DEA**	**REPORTS TO:**	**SW-6289-R**		**[Calculated Data]**
DATE:	**9/29/2025**				

Bio-Infiltration Swales

Road Slope Swale (Priority 2):	**Roadside Slope A**		**Roadside Slope B**	
Base Width (feet):	2		2	
Sideslope 1: (_H:1V)	2		2	
Sideslope 2: (_H:V)	4		0	
Longitudinal Slope (ft/ft):	0.0038			
Determination of Max Usable Swale Length Due to Slope:				
Max Water Depth At Downstream End (feet):	*1.5*		*1.5*	
Swale Volume (CF):	*1500*		*0*	
Length (feet):	*400*		*0*	
Determination of Length of Bermed Swales:				
Swale Length (feet):	400		0	
Storage Depth at U/S End (feet):	0.00		1.50	
Swale Volume (CF):	1500		0	
Infiltration Area Per Bermed Swale (SF):	2600		0	
Number of Bermed Swales:	6		0	
Total Swale Infiltration Area (SF):	15600		0	
Total Swale Volume (CF):	9000		0	
Available Length 1 (feet):	2500		0	
Proposed Length 2 (feet):	2400		0	
Difference (feet):	100	**OK! (Design> Req'd**	0	**No Good (Design< Storage)**

Total Design Storage (CF):	**9,000**	
Total Infiltration Area (SF):	15,600	
Swale Infiltration Rate (cfs):	0.361	
Total Infiltration Rate (cfs):	0.361	
Total Time to Drain (Hrs):	5.89	
Required Treatment Volume:		
Basin Imp. Area x 0.5 inches /12 (CF)	2,292	**OK! (Design> Req'd)**
Required Storage Volume:		
Maximum Storage From Rational Column #7 (CF):	7,655	**OK! (Design> Req'd)**
Target Time to Drain:		
From Design Requirements (Hrs):	72	**OK! (Design<Req'd)**

PROJECT:	**KN 24394 US20, Arco to Idaho Falls**				**[Linked Data]**
BASIN:	2-10 R	Sta 6367-6390			**[User Input Data]**
DESIGNER:	**BCC, DEA**	**REPORTS TO:**	**SW-6367-R**		**[Calculated Data]**
DATE:	**9/29/2025**				

Basin Data

	SF	Acre	C
Impervious Area	48,355	1.110	0.9
Pervious Area	82,086	1.884	0.2
Total Area	130,440	2.995	

Composite "C"	0.46	
Area * "C"	1.376	

			Rational Method Peak Flows (Q=C*I*A)		
Time of Concentration:	10.00	min			
25-Year Intensity	3.61	in/hr	25-year Peak	5.01	cfs
50-Year Intensity	4.16	in/hr	50-year Peak	5.77	cfs
100-year Intensity:	4.69	in/hr	100-year Peak	6.51	cfs

Selected Design Storm:	100-Year
Design Infiltration Rate (in/hr):	1.00

TIME OF CONCENTRATION (Minutes)

Tc (A) Channel or Pipe:

Shape (A) =	Trapezoidal	
L (A) =	200	ft
n(A) =	0.03	Grass Channel
S(A) =	0.009	ft/ft
R(A) =	0.57	ft
V(A) =	3.25	ft/s
Tc (A) =	1.02	min

Tc (B) Channel or Pipe:

Shape (B) =	Circular	
L (B) =	0	
n(B) =	0.013	Concrete
S(B) =	0.01	
R(B) =	0.50	
V(B) =	7.22	
Tc (B) =	0.00	

Tc (C) Shallow/Conc. Flow:

L (C) =	20	
S(C) =	1.00	%
k =	0.213	Short Grass
V (C) =	0.70	
Tc (C) =	0.48	

Tc (D) Sheet Flow:

L (D) =	22	
n(D) =	0.013	Asphalt
S(D) =	0.02	
Tc (D) Estimate =	0.66	<-- Change
Tc Esti. Total =	5.00	min. 5 mins
Resulting I (in/hr) =	6.77	
Tc (D) =	0.66	
		Goal Seek to 0
Tc(tot.) =	10.00	0.00
Intensity (in/hr)=	4.69	

PROJECT:	**KN 24394 US20, Arco to Idaho Falls**			
BASIN:	2-10 R	Sta 6367-6390		
DESIGNER:	**BCC, DEA**	**REPORTS TO:**	**SW-6367-R**	
DATE:	**9/29/2025**			

[Linked Data]
[User Input Data]
[Calculated Data]

MODIFIED RATIONAL METHOD (BOWSTRING) FOR REQUIRED DETENTION STORAGE

#1 Time Inc. (min.)	#2 Time Inc. (sec.) (#1*60)	#3 Intensity (in./hr.)	#4 Q dev. (cfs) (A*C*#3)	#5 V in (cu. ft.)	#6 V out (cu. ft.) (Outf.*#2)	#7 Req. Storage (cu. ft.) (#5-#6)
10.00	600.00	4.69	6.51	5,232	162	5,069
5	300	6.77	9.32	3,745	81	3,664
10	600	4.69	6.45	5,188	162	5,026
15	900	3.64	5.01	5,529	243	5,286
20	1,200	3.16	4.35	6,111	325	5,786
25	1,500	2.69	3.70	6,299	406	5,893
30	1,800	2.21	3.04	6,094	487	5,607
35	2,100	2.06	2.84	6,536	568	5,968
40	2,400	1.91	2.63	6,855	649	6,206
45	2,700	1.77	2.43	7,053	730	6,322
50	3,000	1.62	2.22	7,127	812	6,316
55	3,300	1.47	2.02	7,079	893	6,187
60	3,600	1.32	1.82	6,909	974	5,935
65	3,900	1.27	1.75	7,172	1055	6,116
70	4,200	1.22	1.68	7,393	1136	6,257
75	4,500	1.17	1.61	7,573	1217	6,355
80	4,800	1.12	1.54	7,711	1299	6,413
85	5,100	1.07	1.47	7,809	1380	6,429
90	5,400	1.02	1.40	7,865	1461	6,404
95	5,700	0.97	1.33	7,880	1542	6,338
100	6,000	0.92	1.27	7,853	1623	6,230
105	6,300	0.87	1.20	7,786	1704	6,081
110	6,600	0.82	1.13	7,677	1786	5,891
115	6,900	0.77	1.06	7,527	1867	5,660
120	7,200	0.72	0.99	7,335	1948	5,387
180	10,800	0.50	0.69	7,555	2922	4,633
360	21,600	0.27	0.37	8,130	5844	2,287
720	43,200	0.15	0.21	9,078	11687	0
1440	86,400	0.09	0.12	10,248	23375	0

PROJECT:	**KN 24394 US20, Arco to Idaho Falls**				**[Linked Data]**
BASIN:	2-10 R	Sta 6367-6390			**[User Input Data]**
DESIGNER:	**BCC, DEA**	**REPORTS TO:**	**SW-6367-R**		**[Calculated Data]**
DATE:	**9/29/2025**				

Bio-Infiltration Swales

Road Slope Swale (Priority 2):	**Roadside Slope A**		**Roadside Slope B**	
Base Width (feet):	2		2	
Sideslope 1: (_H:1V)	2		2	
Sideslope 2: (_H:V)	2		2	
Longitudinal Slope (ft/ft):	0.0174		0.0000	
Determination of Max Usable Swale Length Due to Slope:				
Max Water Depth At Downstream End (feet):	*1.5*		*1.5*	
Swale Volume (CF):	*259*		*0*	
Length (feet):	*86*		*0*	
Determination of Length of Bermed Swales:				
Swale Length (feet):	80		0	
Storage Depth at U/S End (feet):	0.11		1.50	
Swale Volume (CF):	258		0	
Infiltration Area Per Bermed Swale (SF):	417		0	
Number of Bermed Swales:	28		0	
Total Swale Infiltration Area (SF):	11687		0	
Total Swale Volume (CF):	7225		0	
Available Length 1 (feet):	2300		0	
Proposed Length 2 (feet):	2240		0	
Difference (feet):	60	**OK! (Design> Req'd**	0	**No Good (Design< Storage)**

Total Design Storage (CF):	**7,225**	
Total Infiltration Area (SF):	11,687	
Swale Infiltration Rate (cfs):	0.271	
Total Infiltration Rate (cfs):	0.271	
Total Time to Drain (Hrs):	6.60	
Required Treatment Volume:		
Basin Imp. Area x 0.5 inches /12 (CF)	2,015	**OK! (Design> Req'd)**
Required Storage Volume:		
Maximum Storage From Rational Column #7 (CF):	6,429	**OK! (Design> Req'd)**
Target Time to Drain:		
From Design Requirements (Hrs):	72	**OK! (Design<Req'd)**

PROJECT:	**KN 24394 US20, Arco to Idaho Falls**				**[Linked Data]**
BASIN:	2-10 R	Sta 6390-6425			**[User Input Data]**
DESIGNER:	**BCC, DEA**	**REPORTS TO:**	**SW-6367-R**		**[Calculated Data]**
DATE:	**9/29/2025**				

Basin Data

	SF	Acre	C
Impervious Area	73,583	1.689	0.9
Pervious Area	124,913	2.868	0.2
Total Area	198,496	4.557	

Composite "C"	0.46	
Area * "C"	2.094	

Time of Concentration:	10.00	min
25-Year Intensity	3.61	in/hr
50-Year Intensity	4.16	in/hr
100-year Intensity:	4.69	in/hr

Rational Method Peak Flows (Q=C*I*A)

25-year Peak	7.62	cfs
50-year Peak	8.78	cfs
100-year Peak	9.90	cfs

Selected Design Storm: 100-Year

Design Infiltration Rate (in/hr): 1.00

TIME OF CONCENTRATION (Minutes)

Tc (A) Channel or Pipe:

Shape (A) =	Trapezoidal	
L (A) =	200	ft
n(A) =	0.03	Grass Channel
S(A) =	0.009	ft/ft
R(A) =	0.57	ft
V(A) =	3.25	ft/s
Tc (A) =	1.02	min

Tc (B) Channel or Pipe:

Shape (B) =	Circular	
L (B) =	0	
n(B) =	0.013	Concrete
S(B) =	0.01	
R(B) =	0.50	
V(B) =	7.22	
Tc (B) =	0.00	

Tc (C) Shallow/Conc. Flow:

L (C) =	20	
S(C) =	1.00	%
k =	0.213	Short Grass
V (C) =	0.70	
Tc (C) =	0.48	

Tc (D) Sheet Flow:

L (D) =	22	
n(D) =	0.013	Asphalt
S(D) =	0.02	
Tc (D) Estimate =	0.66	<-- Change
Tc Esti. Total =	5.00	min. 5 mins
Resulting I (in/hr) =	6.77	
Tc (D) =	0.66	
		Goal Seek to 0
Tc(tot.) =	10.00	0.00
Intensity (in/hr)=	4.69	

PROJECT:	**KN 24394 US20, Arco to Idaho Falls**				**[Linked Data]**
BASIN:	2-10 R	Sta 6390-6425			**[User Input Data]**
DESIGNER:	**BCC, DEA**	**REPORTS TO:**	**SW-6367-R**		**[Calculated Data]**
DATE:	**9/29/2025**				

MODIFIED RATIONAL METHOD (BOWSTRING) FOR REQUIRED DETENTION STORAGE

#1 Time Inc. (min.)	#2 Time Inc. (sec.) (#1*60)	#3 Intensity (in./hr.)	#4 Q dev. (cfs) (A*C*#3)	#5 V in (cu. ft.)	#6 V out (cu. ft.) (Outf.*#2)	#7 Req. Storage (cu. ft.) (#5-#6)
10.00	600.00	4.69	9.90	7,961	226	7,735
5	300	6.77	14.18	5,698	113	5,585
10	600	4.69	9.82	7,895	226	7,669
15	900	3.64	7.62	8,414	339	8,075
20	1,200	3.16	6.62	9,299	452	8,847
25	1,500	2.69	5.63	9,586	565	9,021
30	1,800	2.21	4.63	9,273	678	8,595
35	2,100	2.06	4.32	9,946	791	9,155
40	2,400	1.91	4.01	10,432	904	9,528
45	2,700	1.77	3.70	10,732	1017	9,715
50	3,000	1.62	3.39	10,846	1130	9,716
55	3,300	1.47	3.07	10,773	1243	9,530
60	3,600	1.32	2.76	10,514	1356	9,158
65	3,900	1.27	2.66	10,913	1469	9,444
70	4,200	1.22	2.55	11,250	1582	9,668
75	4,500	1.17	2.45	11,524	1695	9,829
80	4,800	1.12	2.35	11,735	1808	9,927
85	5,100	1.07	2.24	11,883	1921	9,962
90	5,400	1.02	2.14	11,969	2034	9,935
95	5,700	0.97	2.03	11,991	2147	9,844
100	6,000	0.92	1.93	11,951	2260	9,691
105	6,300	0.87	1.82	11,848	2373	9,475
110	6,600	0.82	1.72	11,682	2486	9,196
115	6,900	0.77	1.61	11,453	2599	8,855
120	7,200	0.72	1.51	11,162	2712	8,450
180	10,800	0.50	1.04	11,497	4067	7,430
360	21,600	0.27	0.57	12,372	8135	4,237
720	43,200	0.15	0.32	13,814	16270	0
1440	86,400	0.09	0.18	15,595	32540	0

PROJECT:	**KN 24394 US20, Arco to Idaho Falls**				**[Linked Data]**
BASIN:	2-10 R	Sta 6390-6425			**[User Input Data]**
DESIGNER:	**BCC, DEA**	**REPORTS TO:**	**SW-6367-R**		**[Calculated Data]**
DATE:	**9/29/2025**				

Bio-Infiltration Swales

Road Slope Swale (Priority 2):	**Roadside Slope A**		**Roadside Slope B**	
Base Width (feet):	2		2	
Sideslope 1: (_H:1V)	2		2	
Sideslope 2: (_H:V)	2		2	
Longitudinal Slope (ft/ft):	0.0027		0.0000	
Determination of Max Usable Swale Length Due to Slope:				
Max Water Depth At Downstream End (feet):	*1.5*		*1.5*	
Swale Volume (CF):	*1667*		*0*	
Length (feet):	*556*		*0*	
Determination of Length of Bermed Swales:				
Swale Length (feet):	525		0	
Storage Depth at U/S End (feet):	0.08		1.50	
Swale Volume (CF):	1664		0	
Infiltration Area Per Bermed Swale (SF):	2712		0	
Number of Bermed Swales:	6		0	
Total Swale Infiltration Area (SF):	16270		0	
Total Swale Volume (CF):	9984		0	
Available Length 1 (feet):	3500		0	
Proposed Length 2 (feet):	3150		0	
Difference (feet):	350	**OK! (Design> Req'd**	0	**No Good (Design< Storage)**

Total Design Storage (CF):	**9,984**	
Total Infiltration Area (SF):	16,270	
Swale Infiltration Rate (cfs):	0.377	
Total Infiltration Rate (cfs):	0.377	
Total Time to Drain (Hrs):	7.35	
Required Treatment Volume:		
Basin Imp. Area x 0.5 inches /12 (CF)	3,066	**OK! (Design> Req'd)**
Required Storage Volume:		
Maximum Storage From Rational Column #7 (CF):	9,962	**OK! (Design> Req'd)**
Target Time to Drain:		
From Design Requirements (Hrs):	72	**OK! (Design<Req'd)**

PROJECT:	**KN 24394 US20, Arco to Idaho Falls**				**[Linked Data]**
BASIN:	2-1 L				**[User Input Data]**
DESIGNER:	**BCC, DEA**	**REPORTS TO:**	**SW-5895-L**		**[Calculated Data]**
DATE:	**9/29/2025**				

Basin Data

	SF	Acre	C
Impervious Area	106,158	2.437	0.9
Pervious Area	196,152	4.503	0.2
Total Area	302,311	6.940	

Composite "C"	0.45
Area * "C"	3.094

			Rational Method Peak Flows (Q=C*I*A)		
Time of Concentration:	10.00	min			
25-Year Intensity	3.61	in/hr	25-year Peak	11.26	cfs
50-Year Intensity	4.16	in/hr	50-year Peak	12.98	cfs
100-year Intensity:	4.69	in/hr	100-year Peak	14.63	cfs

Selected Design Storm:	100-Year
Design Infiltration Rate (in/hr):	1.00

PROJECT:	**KN 24394 US20, Arco to Idaho Falls**				**[Linked Data]**
BASIN:	2-1 L				**[User Input Data]**
DESIGNER:	**BCC, DEA**	**REPORTS TO:**	**SW-5895-L**		**[Calculated Data]**
DATE:	**9/29/2025**				

MODIFIED RATIONAL METHOD (BOWSTRING) FOR REQUIRED DETENTION STORAGE

#1 Time Inc. (min.)	#2 Time Inc. (sec.) (#1*60)	#3 Intensity (in./hr.)	#4 Q dev. (cfs) (A*C*#3)	#5 V in (cu. ft.)	#6 V out (cu. ft.) (Outf.*#2)	#7 Req. Storage (cu. ft.) (#5-#6)
10.00	600.00	4.69	14.63	11,764	425	11,339
5	300	6.77	20.95	8,420	212	8,208
10	600	4.69	14.51	11,667	425	11,242
15	900	3.64	11.26	12,433	637	11,796
20	1,200	3.16	9.79	13,741	850	12,891
25	1,500	2.69	8.31	14,164	1062	13,102
30	1,800	2.21	6.84	13,703	1275	12,428
35	2,100	2.06	6.38	14,697	1487	13,209
40	2,400	1.91	5.92	15,415	1700	13,715
45	2,700	1.77	5.46	15,858	1912	13,946
50	3,000	1.62	5.00	16,026	2125	13,902
55	3,300	1.47	4.54	15,919	2337	13,582
60	3,600	1.32	4.08	15,536	2549	12,986
65	3,900	1.27	3.93	16,126	2762	13,364
70	4,200	1.22	3.77	16,623	2974	13,649
75	4,500	1.17	3.62	17,028	3187	13,841
80	4,800	1.12	3.47	17,340	3399	13,941
85	5,100	1.07	3.31	17,559	3612	13,947
90	5,400	1.02	3.16	17,685	3824	13,861
95	5,700	0.97	3.00	17,719	4037	13,682
100	6,000	0.92	2.85	17,659	4249	13,410
105	6,300	0.87	2.69	17,507	4462	13,046
110	6,600	0.82	2.54	17,262	4674	12,588
115	6,900	0.77	2.38	16,924	4886	12,038
120	7,200	0.72	2.23	16,494	5099	11,395
180	10,800	0.50	1.54	16,989	7648	9,341
360	21,600	0.27	0.84	18,282	15297	2,985
720	43,200	0.15	0.47	20,412	30593	0
1440	86,400	0.09	0.27	23,044	61186	0

PROJECT:	**KN 24394 US20, Arco to Idaho Falls**				[Linked Data]
BASIN:	2-1 L				[User Input Data]
DESIGNER:	**BCC, DEA**	**REPORTS TO:**	**SW-5895-L**		[Calculated Data]
DATE:	**9/29/2025**				

Bio-Infiltration Swales

Lowpoint Swale (Priority 1):

Width (feet):	0
Length (feet):	0
Sideslope 1 (H:V):	0
Sideslope 2 (H:V):	0
Max Depth (feet):	0
Max Volume When Full (CF):	0
LP Swale Infiltration Area (SF):	0

Road Slope Swale (Priority 2):	**Roadside Slope A**	**Roadside Slope B**
Base Width (feet):	2	2
Sideslope 1: (_H:1V)	2	2
Sideslope 2: (_H:V)	4	4
Longitudinal Slope (ft/ft):	0.0060	0.0062
Determination of Max Usable Swale Length Due to Slope:		
Max Water Depth At Downstream End (feet):	*1.5*	*1.5*
Swale Volume (CF):	*938*	*907*
Length (feet):	*250*	*241.9*
Determination of Length of Bermed Swales:		
Swale Length (feet):	250	240
Storage Depth at U/S End (feet):	0.00	0.01
Swale Volume (CF):	938	907
Infiltration Area Per Bermed Swale (SF):	1625	1569
Number of Bermed Swales:	14	5
Total Swale Infiltration Area (SF):	22750	7843
Total Swale Volume (CF):	13125	4536
Available Length 1 (feet):	3593	1233
Proposed Length 2 (feet):	3500	1200
Difference (feet):	93 **OK! (Design> Req'd**	32.5 **OK! (Design> Req'd)**

Total Design Storage (CF):	**17,661**
Total Infiltration Area (SF):	30,593
Swale Infiltration Rate (cfs):	0.708
Total Infiltration Rate (cfs):	0.708
Total Time to Drain (Hrs):	5.47
Required Treatment Volume:	
Basin Imp. Area x 0.5 inches /12 (CF)	4,423 **OK! (Design> Req'd)**
Required Storage Volume:	
Maximum Storage From Rational Column #7 (CF):	13,947 **OK! (Design> Req'd)**
Target Time to Drain:	
From Design Requirements (Hrs):	72 **OK! (Design<Req'd)**

PROJECT:	**KN 24394 US20, Arco to Idaho Falls**				**[Linked Data]**
BASIN:	2-2 L				**[User Input Data]**
DESIGNER:	**BCC, DEA**	**REPORTS TO:**	**SW-5943-L**		**[Calculated Data]**
DATE:	**9/29/2025**				

Basin Data

	SF	Acre	C
Impervious Area	57,162	1.312	0.9
Pervious Area	102,983	2.364	0.2
Total Area	160,144	3.676	

Composite "C"	0.45	
Area * "C"	1.654	

			Rational Method Peak Flows (Q=C*I*A)		
Time of Concentration:	10.00	min			
25-Year Intensity	3.61	in/hr	25-year Peak	6.02	cfs
50-Year Intensity	4.16	in/hr	50-year Peak	6.94	cfs
100-year Intensity:	4.69	in/hr	100-year Peak	7.82	cfs

Selected Design Storm: 100-Year

Design Infiltration Rate (in/hr): 1.00

PROJECT:	**KN 24394 US20, Arco to Idaho Falls**			
BASIN:	2-2 L			
DESIGNER:	**BCC, DEA**	**REPORTS TO:**	**SW-5943-L**	
DATE:	**9/29/2025**			

[Linked Data]
[User Input Data]
[Calculated Data]

MODIFIED RATIONAL METHOD (BOWSTRING) FOR REQUIRED DETENTION STORAGE

#1 Time Inc. (min.)	#2 Time Inc. (sec.) (#1*60)	#3 Intensity (in./hr.)	#4 Q dev. (cfs) (A*C*#3)	#5 V in (cu. ft.)	#6 V out (cu. ft.) (Outf.*#2)	#7 Req. Storage (cu. ft.) (#5-#6)
10.00	600.00	4.69	7.82	6,288	285	6,004
5	300	6.77	11.20	4,501	142	4,359
10	600	4.69	7.76	6,236	285	5,952
15	900	3.64	6.02	6,646	427	6,219
20	1,200	3.16	5.23	7,345	569	6,776
25	1,500	2.69	4.44	7,571	711	6,860
30	1,800	2.21	3.66	7,325	854	6,471
35	2,100	2.06	3.41	7,856	996	6,860
40	2,400	1.91	3.16	8,240	1138	7,102
45	2,700	1.77	2.92	8,477	1281	7,196
50	3,000	1.62	2.67	8,567	1423	7,144
55	3,300	1.47	2.43	8,509	1565	6,944
60	3,600	1.32	2.18	8,304	1707	6,597
65	3,900	1.27	2.10	8,620	1850	6,770
70	4,200	1.22	2.02	8,886	1992	6,894
75	4,500	1.17	1.94	9,102	2134	6,968
80	4,800	1.12	1.85	9,269	2277	6,992
85	5,100	1.07	1.77	9,386	2419	6,967
90	5,400	1.02	1.69	9,454	2561	6,892
95	5,700	0.97	1.60	9,471	2703	6,768
100	6,000	0.92	1.52	9,440	2846	6,594
105	6,300	0.87	1.44	9,358	2988	6,370
110	6,600	0.82	1.36	9,227	3130	6,097
115	6,900	0.77	1.27	9,047	3273	5,774
120	7,200	0.72	1.19	8,817	3415	5,402
180	10,800	0.50	0.83	9,081	5122	3,959
360	21,600	0.27	0.45	9,772	10244	0
720	43,200	0.15	0.25	10,911	20489	0
1440	86,400	0.09	0.14	12,318	40978	0

PROJECT:	**KN 24394 US20, Arco to Idaho Falls**				[Linked Data]
BASIN:	2-2 L				[User Input Data]
DESIGNER:	**BCC, DEA**	**REPORTS TO:**	**SW-5943-L**		[Calculated Data]
DATE:	**9/29/2025**				

Bio-Infiltration Swales

Lowpoint Swale (Priority 1):

Width (feet):	0
Length (feet):	0
Sideslope 1 (H:V):	0
Sideslope 2 (H:V):	0
Max Depth (feet):	0
Max Volume When Full (CF):	0
LP Swale Infiltration Area (SF):	0

Road Slope Swale (Priority 2):	**Roadside Slope A**	**Roadside Slope B**
Base Width (feet):	2	2
Sideslope 1: (_H:1V)	4	2
Sideslope 2: (_H:V)	4	2
Longitudinal Slope (ft/ft):	0.0233	0.0023
Determination of Max Usable Swale Length Due to Slope:		
Max Water Depth At Downstream End (feet):	*1.5*	*1.5*
Swale Volume (CF):	*290*	*1957*
Length (feet):	*64*	*652*
Determination of Length of Bermed Swales:		
Swale Length (feet):	60	200
Storage Depth at U/S End (feet):	0.10	1.04
Swale Volume (CF):	289	1160
Infiltration Area Per Bermed Swale (SF):	504	1416
Number of Bermed Swales:	35	2
Total Swale Infiltration Area (SF):	17657	2832
Total Swale Volume (CF):	10122	2320
Available Length 1 (feet):	2143	436
Proposed Length 2 (feet):	2100	400
Difference (feet):	43 **OK! (Design> Req'd**	36 **OK! (Design> Req'd)**

Total Design Storage (CF):	**12,442**
Total Infiltration Area (SF):	20,489
Swale Infiltration Rate (cfs):	0.474
Total Infiltration Rate (cfs):	0.474
Total Time to Drain (Hrs):	4.21
Required Treatment Volume:	
Basin Imp. Area x 0.5 inches /12 (CF)	2,382 **OK! (Design> Req'd)**
Required Storage Volume:	
Maximum Storage From Rational Column #7 (CF):	7,196 **OK! (Design> Req'd)**
Target Time to Drain:	
From Design Requirements (Hrs):	72 **OK! (Design<Req'd)**

PROJECT:	**KN 24394 US20, Arco to Idaho Falls**				**[Linked Data]**
BASIN:	2-3 L				**[User Input Data]**
DESIGNER:	**BCC, DEA**	**REPORTS TO:**	**SW-5969-L**		**[Calculated Data]**
DATE:	**9/29/2025**				

Basin Data

	SF	Acre	C
Impervious Area	77,357	1.776	0.9
Pervious Area	136,456	3.133	0.2
Total Area	213,813	4.908	

Composite "C"	0.45	
Area * "C"	2.225	

			Rational Method Peak Flows (Q=C*I*A)		
Time of Concentration:	10.00	min			
25-Year Intensity	3.61	in/hr	25-year Peak	8.10	cfs
50-Year Intensity	4.16	in/hr	50-year Peak	9.33	cfs
100-year Intensity:	4.69	in/hr	100-year Peak	10.52	cfs

Selected Design Storm:	100-Year
Design Infiltration Rate (in/hr):	1.00

TIME OF CONCENTRATION (Minutes)

Tc (A) Channel or Pipe:

Shape (A) =	Triangular	
L (A) =	225	ft
n(A) =	0.03	Grass Channel
S(A) =	0.0039	ft/ft
R(A) =	0.47	ft
V(A) =	1.89	ft/s
Tc (A) =	1.99	min

Tc (B) Channel or Pipe:

Shape (B) =	Circular	
L (B) =	0	
n(B) =	0.013	Concrete
S(B) =	0.01	
R(B) =	0.50	
V(B) =	7.22	
Tc (B) =	0.00	

Tc (C) Shallow/Conc. Flow:

L (C) =	20	
S(C) =	16.70	%
k =	0.213	Short Grass
V (C) =	2.86	
Tc (C) =	0.12	

Tc (D) Sheet Flow:

L (D) =	22	
n(D) =	0.013	Asphalt
S(D) =	0.02	
Tc (D) Estimate =	0.66	<-- Change
Tc Esti. Total =	5.00	min. 5 mins
Resulting I (in/hr) =	6.77	
Tc (D) =	0.66	
		Goal Seek to 0
Tc(tot.) =	10.00	0.00
Intensity (in/hr)=	4.69	

PROJECT:	**KN 24394 US20, Arco to Idaho Falls**			
BASIN:	2-3 L			
DESIGNER:	**BCC, DEA**	**REPORTS TO:**	**SW-5969-L**	
DATE:	**9/29/2025**			

[Linked Data]
[User Input Data]
[Calculated Data]

MODIFIED RATIONAL METHOD (BOWSTRING) FOR REQUIRED DETENTION STORAGE

#1 Time Inc. (min.)	#2 Time Inc. (sec.) (#1*60)	#3 Intensity (in./hr.)	#4 Q dev. (cfs) (A*C*#3)	#5 V in (cu. ft.)	#6 V out (cu. ft.) (Outf.*#2)	#7 Req. Storage (cu. ft.) (#5-#6)
10.00	600.00	4.69	10.52	8,459	310	8,149
5	300	6.77	15.06	6,055	155	5,900
10	600	4.69	10.43	8,389	310	8,079
15	900	3.64	8.10	8,940	466	8,475
20	1,200	3.16	7.04	9,881	621	9,260
25	1,500	2.69	5.98	10,185	776	9,409
30	1,800	2.21	4.92	9,853	931	8,922
35	2,100	2.06	4.59	10,568	1087	9,481
40	2,400	1.91	4.26	11,085	1242	9,843
45	2,700	1.77	3.93	11,403	1397	10,006
50	3,000	1.62	3.60	11,524	1552	9,972
55	3,300	1.47	3.27	11,447	1708	9,739
60	3,600	1.32	2.94	11,171	1863	9,308
65	3,900	1.27	2.83	11,596	2018	9,578
70	4,200	1.22	2.71	11,954	2173	9,780
75	4,500	1.17	2.60	12,245	2329	9,916
80	4,800	1.12	2.49	12,469	2484	9,985
85	5,100	1.07	2.38	12,626	2639	9,987
90	5,400	1.02	2.27	12,717	2794	9,923
95	5,700	0.97	2.16	12,741	2949	9,792
100	6,000	0.92	2.05	12,698	3105	9,594
105	6,300	0.87	1.94	12,589	3260	9,329
110	6,600	0.82	1.82	12,413	3415	8,998
115	6,900	0.77	1.71	12,170	3570	8,599
120	7,200	0.72	1.60	11,860	3726	8,134
180	10,800	0.50	1.11	12,216	5589	6,628
360	21,600	0.27	0.60	13,146	11177	1,969
720	43,200	0.15	0.34	14,678	22354	0
1440	86,400	0.09	0.19	16,570	44708	0

PROJECT:	**KN 24394 US20, Arco to Idaho Falls**				[Linked Data]
BASIN:	2-3 L				[User Input Data]
DESIGNER:	**BCC, DEA**	**REPORTS TO:**	**SW-5969-L**		[Calculated Data]
DATE:	**9/29/2025**				

Bio-Infiltration Swales

Lowpoint Swale (Priority 1):

Width (feet):	0
Length (feet):	0
Sideslope 1 (H:V):	0
Sideslope 2 (H:V):	0
Max Depth (feet):	0
Max Volume When Full (CF):	0
LP Swale Infiltration Area (SF):	0

Road Slope Swale (Priority 2):	**Roadside Slope A**	**Roadside Slope B**
Base Width (feet):	2	2
Sideslope 1: (_H:1V)	2	2
Sideslope 2: (_H:V)	4	2
Longitudinal Slope (ft/ft):	0.0069	0.0000
Determination of Max Usable Swale Length Due to Slope:		
Max Water Depth At Downstream End (feet):	*1.5*	*1.5*
Swale Volume (CF):	*815*	*0*
Length (feet):	*217*	*0*
Determination of Length of Bermed Swales:		
Swale Length (feet):	210	0
Storage Depth at U/S End (feet):	0.05	1.50
Swale Volume (CF):	815	0
Infiltration Area Per Bermed Swale (SF):	1397	0
Number of Bermed Swales:	16	0
Total Swale Infiltration Area (SF):	22354	0
Total Swale Volume (CF):	13037	0
Available Length 1 (feet):	3516	0
Proposed Length 2 (feet):	3360	0
Difference (feet):	156 OK! (Design> Req'd	0 No Good (Design< Storage)

Total Design Storage (CF):	**13,037**
Total Infiltration Area (SF):	22,354
Swale Infiltration Rate (cfs):	0.517
Total Infiltration Rate (cfs):	0.517
Total Time to Drain (Hrs):	5.37

Required Treatment Volume:		
Basin Imp. Area x 0.5 inches /12 (CF)	3,223	OK! (Design> Req'd)
Required Storage Volume:		
Maximum Storage From Rational Column #7 (CF):	10,006	OK! (Design> Req'd)
Target Time to Drain:		
From Design Requirements (Hrs):	72	OK! (Design<Req'd)

PROJECT:	**KN 24394 US20, Arco to Idaho Falls**				**[Linked Data]**
BASIN:	2-4 L	Sta 6004-6025			**[User Input Data]**
DESIGNER:	**BCC, DEA**	**REPORTS TO:**	**SW-6004-L**		**[Calculated Data]**
DATE:	**9/29/2025**				

Basin Data

	SF	Acre	C
Impervious Area	48,908	1.123	0.9
Pervious Area	88,785	2.038	0.2
Total Area	137,693	3.161	

Composite "C"	0.45	
Area * "C"	1.418	

Time of Concentration:	10.00	min	**Rational Method Peak Flows (Q=C*I*A)**		
25-Year Intensity	3.61	in/hr	25-year Peak	5.16	cfs
50-Year Intensity	4.16	in/hr	50-year Peak	5.95	cfs
100-year Intensity:	4.69	in/hr	100-year Peak	6.71	cfs

Selected Design Storm:	100-Year
Design Infiltration Rate (in/hr):	1.00

PROJECT:	**KN 24394 US20, Arco to Idaho Falls**			
BASIN:	2-4 L	Sta 6004-6025		
DESIGNER:	**BCC, DEA**	**REPORTS TO:**	**SW-6004-L**	
DATE:	**9/29/2025**			

[Linked Data]
[User Input Data]
[Calculated Data]

MODIFIED RATIONAL METHOD (BOWSTRING) FOR REQUIRED DETENTION STORAGE

#1 Time Inc. (min.)	#2 Time Inc. (sec.) (#1*60)	#3 Intensity (in./hr.)	#4 Q dev. (cfs) (A*C*#3)	#5 V in (cu. ft.)	#6 V out (cu. ft.) (Outf.*#2)	#7 Req. Storage (cu. ft.) (#5-#6)
10.00	600.00	4.69	6.71	5,392	194	5,198
5	300	6.77	9.60	3,860	97	3,762
10	600	4.69	6.65	5,347	194	5,153
15	900	3.64	5.16	5,699	292	5,407
20	1,200	3.16	4.49	6,298	389	5,910
25	1,500	2.69	3.81	6,492	486	6,006
30	1,800	2.21	3.13	6,281	583	5,698
35	2,100	2.06	2.92	6,736	680	6,056
40	2,400	1.91	2.71	7,066	777	6,288
45	2,700	1.77	2.50	7,269	875	6,394
50	3,000	1.62	2.29	7,346	972	6,374
55	3,300	1.47	2.08	7,296	1069	6,227
60	3,600	1.32	1.87	7,121	1166	5,955
65	3,900	1.27	1.80	7,391	1263	6,128
70	4,200	1.22	1.73	7,619	1361	6,259
75	4,500	1.17	1.66	7,805	1458	6,347
80	4,800	1.12	1.59	7,948	1555	6,393
85	5,100	1.07	1.52	8,048	1652	6,396
90	5,400	1.02	1.45	8,106	1749	6,357
95	5,700	0.97	1.38	8,122	1846	6,275
100	6,000	0.92	1.30	8,094	1944	6,151
105	6,300	0.87	1.23	8,025	2041	5,984
110	6,600	0.82	1.16	7,912	2138	5,774
115	6,900	0.77	1.09	7,757	2235	5,522
120	7,200	0.72	1.02	7,560	2332	5,228
180	10,800	0.50	0.71	7,787	3499	4,288
360	21,600	0.27	0.38	8,380	6997	1,382
720	43,200	0.15	0.22	9,356	13994	0
1440	86,400	0.09	0.12	10,562	27989	0

PROJECT:	**KN 24394 US20, Arco to Idaho Falls**				[Linked Data]
BASIN:	2-4 L	Sta 6004-6025			[User Input Data]
DESIGNER:	**BCC, DEA**	**REPORTS TO:**	**SW-6004-L**		[Calculated Data]
DATE:	**9/29/2025**				

Bio-Infiltration Swales

Lowpoint Swale (Priority 1):

Width (feet):	0
Length (feet):	0
Sideslope 1 (H:V):	0
Sideslope 2 (H:V):	0
Max Depth (feet):	0
Max Volume When Full (CF):	0
LP Swale Infiltration Area (SF):	0

Road Slope Swale (Priority 2):	**Roadside Slope A**	**Roadside Slope B**
Base Width (feet):	2	0
Sideslope 1: (_H:1V)	2	0
Sideslope 2: (_H:V)	4	0
Longitudinal Slope (ft/ft):	0.0230	0.0000

Determination of Max Usable Swale Length Due to Slope:

Max Water Depth At Downstream End (feet):	*1.5*	*0.0*
Swale Volume (CF):	*245*	*0*
Length (feet):	*65*	*0*

Determination of Length of Bermed Swales:

Swale Length (feet):	60	0
Storage Depth at U/S End (feet):	0.12	0.00
Swale Volume (CF):	244	0
Infiltration Area Per Bermed Swale (SF):	412	0
Number of Bermed Swales:	34	0
Total Swale Infiltration Area (SF):	13994	0
Total Swale Volume (CF):	8291	0
Available Length 1 (feet):	2100	0
Proposed Length 2 (feet):	2040	0
Difference (feet):	60	0

OK! (Design> Req'd

No Good (Design< Storage)

Total Design Storage (CF):	**8,291**
Total Infiltration Area (SF):	13,994
Swale Infiltration Rate (cfs):	0.324
Total Infiltration Rate (cfs):	0.324
Total Time to Drain (Hrs):	5.48

Required Treatment Volume:

Basin Imp. Area x 0.5 inches /12 (CF): 2,038 **OK! (Design> Req'd)**

Required Storage Volume:

Maximum Storage From Rational Column #7 (CF): 6,396 **OK! (Design> Req'd)**

Target Time to Drain:

From Design Requirements (Hrs): 72 **OK! (Design<Req'd)**

PROJECT:	**KN 24394 US20, Arco to Idaho Falls**				**[Linked Data]**
BASIN:	2-4 L	Sta 6025-6043			**[User Input Data]**
DESIGNER:	**BCC, DEA**	**REPORTS TO:**	**SW-6004-L**		**[Calculated Data]**
DATE:	**9/29/2025**				

Basin Data

	SF	Acre	C
Impervious Area	41,921	0.962	0.9
Pervious Area	76,101	1.747	0.2
Total Area	118,022	2.709	

Composite "C"	0.45
Area * "C"	1.216

			Rational Method Peak Flows (Q=C*I*A)		
Time of Concentration:	10.00	min			
25-Year Intensity	3.61	in/hr	25-year Peak	4.42	cfs
50-Year Intensity	4.16	in/hr	50-year Peak	5.10	cfs
100-year Intensity:	4.69	in/hr	100-year Peak	5.75	cfs

Selected Design Storm:	100-Year
Design Infiltration Rate (in/hr):	1.00

PROJECT:	**KN 24394 US20, Arco to Idaho Falls**			
BASIN:	2-4 L	Sta 6025-6043		
DESIGNER:	**BCC, DEA**	**REPORTS TO:**	**SW-6004-L**	
DATE:	**9/29/2025**			

[Linked Data]
[User Input Data]
[Calculated Data]

MODIFIED RATIONAL METHOD (BOWSTRING) FOR REQUIRED DETENTION STORAGE

#1 Time Inc. (min.)	#2 Time Inc. (sec.) (#1*60)	#3 Intensity (in./hr.)	#4 Q dev. (cfs) (A*C*#3)	#5 V in (cu. ft.)	#6 V out (cu. ft.) (Outf.*#2)	#7 Req. Storage (cu. ft.) (#5-#6)
10.00	600.00	4.69	5.75	4,622	149	4,473
5	300	6.77	8.23	3,308	74	3,234
10	600	4.69	5.70	4,584	149	4,435
15	900	3.64	4.42	4,885	223	4,661
20	1,200	3.16	3.85	5,399	298	5,101
25	1,500	2.69	3.27	5,565	372	5,192
30	1,800	2.21	2.69	5,383	447	4,937
35	2,100	2.06	2.51	5,774	521	5,253
40	2,400	1.91	2.33	6,056	596	5,460
45	2,700	1.77	2.15	6,230	670	5,560
50	3,000	1.62	1.97	6,296	745	5,552
55	3,300	1.47	1.78	6,254	819	5,435
60	3,600	1.32	1.60	6,104	894	5,210
65	3,900	1.27	1.54	6,336	968	5,367
70	4,200	1.22	1.48	6,531	1043	5,488
75	4,500	1.17	1.42	6,690	1117	5,573
80	4,800	1.12	1.36	6,813	1192	5,621
85	5,100	1.07	1.30	6,899	1266	5,632
90	5,400	1.02	1.24	6,948	1341	5,608
95	5,700	0.97	1.18	6,961	1415	5,546
100	6,000	0.92	1.12	6,938	1490	5,448
105	6,300	0.87	1.06	6,878	1564	5,314
110	6,600	0.82	1.00	6,782	1639	5,143
115	6,900	0.77	0.94	6,649	1713	4,936
120	7,200	0.72	0.88	6,480	1788	4,692
180	10,800	0.50	0.61	6,675	2681	3,993
360	21,600	0.27	0.33	7,183	5363	1,820
720	43,200	0.15	0.18	8,019	10725	0
1440	86,400	0.09	0.10	9,053	21450	0

PROJECT:	**KN 24394 US20, Arco to Idaho Falls**				[Linked Data]
BASIN:	2-4 L	Sta 6025-6043			[User Input Data]
DESIGNER:	**BCC, DEA**	**REPORTS TO:**	**SW-6004-L**		[Calculated Data]
DATE:	**9/29/2025**				

Bio-Infiltration Swales

Lowpoint Swale (Priority 1):

Width (feet):	0
Length (feet):	0
Sideslope 1 (H:V):	0
Sideslope 2 (H:V):	0
Max Depth (feet):	0
Max Volume When Full (CF):	0
LP Swale Infiltration Area (SF):	0

Road Slope Swale (Priority 2):	**Roadside Slope A**	**Roadside Slope B**
Base Width (feet):	2	0
Sideslope 1: (_H:1V)	2	0
Sideslope 2: (_H:V)	4	0
Longitudinal Slope (ft/ft):	0.0100	0.0000

Determination of Max Usable Swale Length Due to Slope:

Max Water Depth At Downstream End (feet):	*1.5*	*0.0*
Swale Volume (CF):	*563*	*0*
Length (feet):	*150*	*0*

Determination of Length of Bermed Swales:

Swale Length (feet):	150		0	
Storage Depth at U/S End (feet):	0.00		0.00	
Swale Volume (CF):	563		0	
Infiltration Area Per Bermed Swale (SF):	975		0	
Number of Bermed Swales:	11		0	
Total Swale Infiltration Area (SF):	10725		0	
Total Swale Volume (CF):	6188		0	
Available Length 1 (feet):	1800		0	
Proposed Length 2 (feet):	1650		0	
Difference (feet):	150	OK! (Design> Req'd	0	No Good (Design< Storage)

Total Design Storage (CF):	**6,188**	
Total Infiltration Area (SF):	10,725	
Swale Infiltration Rate (cfs):	0.248	
Total Infiltration Rate (cfs):	0.248	
Total Time to Drain (Hrs):	6.30	
Required Treatment Volume:		
Basin Imp. Area x 0.5 inches /12 (CF)	1,747	OK! (Design> Req'd)
Required Storage Volume:		
Maximum Storage From Rational Column #7 (CF):	5,632	OK! (Design> Req'd)
Target Time to Drain:		
From Design Requirements (Hrs):	72	OK! (Design<Req'd)

PROJECT:	**KN 24394 US20, Arco to Idaho Falls**				**[Linked Data]**
BASIN:	2-4 L	Sta 6043-6059			**[User Input Data]**
DESIGNER:	**BCC, DEA**	**REPORTS TO:**	**SW-6004-L**		**[Calculated Data]**
DATE:	**9/29/2025**				

Basin Data

	SF	Acre	C
Impervious Area	37,263	0.855	0.9
Pervious Area	67,645	1.553	0.2
Total Area	104,909	2.408	

Composite "C"	0.45
Area * "C"	1.080

			Rational Method Peak Flows (Q=C*I*A)		
Time of Concentration:	10.00	min			
25-Year Intensity	3.61	in/hr	25-year Peak	3.93	cfs
50-Year Intensity	4.16	in/hr	50-year Peak	4.53	cfs
100-year Intensity:	4.69	in/hr	100-year Peak	5.11	cfs

Selected Design Storm:	100-Year
Design Infiltration Rate (in/hr):	1.00

PROJECT:	**KN 24394 US20, Arco to Idaho Falls**			
BASIN:	2-4 L	Sta 6043-6059		
DESIGNER:	**BCC, DEA**	**REPORTS TO:**	**SW-6004-L**	
DATE:	**9/29/2025**			

[Linked Data]
[User Input Data]
[Calculated Data]

MODIFIED RATIONAL METHOD (BOWSTRING) FOR REQUIRED DETENTION STORAGE

#1 Time Inc. (min.)	#2 Time Inc. (sec.) (#1*60)	#3 Intensity (in./hr.)	#4 Q dev. (cfs) (A*C*#3)	#5 V in (cu. ft.)	#6 V out (cu. ft.) (Outf.*#2)	#7 Req. Storage (cu. ft.) (#5-#6)
10.00	600.00	4.69	5.11	4,108	143	3,965
5	300	6.77	7.31	2,941	72	2,869
10	600	4.69	5.07	4,074	143	3,931
15	900	3.64	3.93	4,342	215	4,127
20	1,200	3.16	3.42	4,799	286	4,512
25	1,500	2.69	2.90	4,947	358	4,589
30	1,800	2.21	2.39	4,785	430	4,356
35	2,100	2.06	2.23	5,132	501	4,631
40	2,400	1.91	2.07	5,383	573	4,811
45	2,700	1.77	1.91	5,538	644	4,894
50	3,000	1.62	1.75	5,597	716	4,881
55	3,300	1.47	1.59	5,559	787	4,772
60	3,600	1.32	1.43	5,425	859	4,566
65	3,900	1.27	1.37	5,632	931	4,701
70	4,200	1.22	1.32	5,805	1002	4,803
75	4,500	1.17	1.26	5,947	1074	4,873
80	4,800	1.12	1.21	6,056	1145	4,910
85	5,100	1.07	1.16	6,132	1217	4,915
90	5,400	1.02	1.10	6,176	1289	4,888
95	5,700	0.97	1.05	6,188	1360	4,828
100	6,000	0.92	0.99	6,167	1432	4,735
105	6,300	0.87	0.94	6,114	1503	4,611
110	6,600	0.82	0.89	6,028	1575	4,453
115	6,900	0.77	0.83	5,910	1646	4,264
120	7,200	0.72	0.78	5,760	1718	4,042
180	10,800	0.50	0.54	5,933	2577	3,356
360	21,600	0.27	0.29	6,384	5154	1,230
720	43,200	0.15	0.16	7,128	10308	0
1440	86,400	0.09	0.09	8,047	20617	0

PROJECT:	**KN 24394 US20, Arco to Idaho Falls**				[Linked Data]
BASIN:	2-4 L	Sta 6043-6059			[User Input Data]
DESIGNER:	**BCC, DEA**	**REPORTS TO:**	**SW-6004-L**		[Calculated Data]
DATE:	**9/29/2025**				

Bio-Infiltration Swales

Lowpoint Swale (Priority 1):

Width (feet):	0
Length (feet):	0
Sideslope 1 (H:V):	0
Sideslope 2 (H:V):	0
Max Depth (feet):	0
Max Volume When Full (CF):	0
LP Swale Infiltration Area (SF):	0

Road Slope Swale (Priority 2):	**Roadside Slope A**	**Roadside Slope B**
Base Width (feet):	2	0
Sideslope 1: (_H:1V)	2	0
Sideslope 2: (_H:V)	4	0
Longitudinal Slope (ft/ft):	0.0122	0.0000

Determination of Max Usable Swale Length Due to Slope:

Max Water Depth At Downstream End (feet):	*1.5*	*0.0*
Swale Volume (CF):	*461*	*0*
Length (feet):	*123*	*0*

Determination of Length of Bermed Swales:

Swale Length (feet):	120	0
Storage Depth at U/S End (feet):	0.04	0.00
Swale Volume (CF):	461	0
Infiltration Area Per Bermed Swale (SF):	793	0
Number of Bermed Swales:	13	0
Total Swale Infiltration Area (SF):	10308	0
Total Swale Volume (CF):	5992	0
Available Length 1 (feet):	1600	0
Proposed Length 2 (feet):	1560	0
Difference (feet):	40	0

OK! (Design> Req'd

No Good (Design< Storage)

Total Design Storage (CF):	**5,992**
Total Infiltration Area (SF):	10,308
Swale Infiltration Rate (cfs):	0.239
Total Infiltration Rate (cfs):	0.239
Total Time to Drain (Hrs):	5.72

Required Treatment Volume:

Basin Imp. Area x 0.5 inches /12 (CF): 1,553 OK! (Design> Req'd)

Required Storage Volume:

Maximum Storage From Rational Column #7 (CF): 4,915 OK! (Design> Req'd)

Target Time to Drain:

From Design Requirements (Hrs): 72 OK! (Design<Req'd)

PROJECT:	**KN 24394 US20, Arco to Idaho Falls**				**[Linked Data]**
BASIN:	2-4 L	Sta 6059-6078			**[User Input Data]**
DESIGNER:	**BCC, DEA**	**REPORTS TO:**	**SW-6004-L**		**[Calculated Data]**
DATE:	**9/29/2025**				

Basin Data

	SF	Acre	C
Impervious Area	44,250	1.016	0.9
Pervious Area	80,329	1.844	0.2
Total Area	124,579	2.860	

Composite "C"	0.45
Area * "C"	1.283

			Rational Method Peak Flows (Q=C*I*A)		
Time of Concentration:	10.00	min			
25-Year Intensity	3.61	in/hr	25-year Peak	4.67	cfs
50-Year Intensity	4.16	in/hr	50-year Peak	5.38	cfs
100-year Intensity:	4.69	in/hr	100-year Peak	6.07	cfs

Selected Design Storm: 100-Year

Design Infiltration Rate (in/hr): 1.00

PROJECT:	**KN 24394 US20, Arco to Idaho Falls**			
BASIN:	2-4 L	Sta 6059-6078		
DESIGNER:	**BCC, DEA**	**REPORTS TO:**	**SW-6004-L**	
DATE:	**9/29/2025**			

[Linked Data]
[User Input Data]
[Calculated Data]

MODIFIED RATIONAL METHOD (BOWSTRING) FOR REQUIRED DETENTION STORAGE

#1 Time Inc. (min.)	#2 Time Inc. (sec.) (#1*60)	#3 Intensity (in./hr.)	#4 Q dev. (cfs) (A*C*#3)	#5 V in (cu. ft.)	#6 V out (cu. ft.) (Outf.*#2)	#7 Req. Storage (cu. ft.) (#5-#6)
10.00	600.00	4.69	6.07	4,878	145	4,734
5	300	6.77	8.69	3,492	72	3,420
10	600	4.69	6.02	4,838	145	4,693
15	900	3.64	4.67	5,156	217	4,939
20	1,200	3.16	4.06	5,699	290	5,409
25	1,500	2.69	3.45	5,874	362	5,512
30	1,800	2.21	2.84	5,683	434	5,248
35	2,100	2.06	2.65	6,095	507	5,588
40	2,400	1.91	2.45	6,393	579	5,814
45	2,700	1.77	2.26	6,576	652	5,925
50	3,000	1.62	2.07	6,646	724	5,922
55	3,300	1.47	1.88	6,601	796	5,805
60	3,600	1.32	1.69	6,443	869	5,574
65	3,900	1.27	1.63	6,688	941	5,746
70	4,200	1.22	1.57	6,894	1014	5,880
75	4,500	1.17	1.50	7,062	1086	5,976
80	4,800	1.12	1.44	7,191	1158	6,033
85	5,100	1.07	1.37	7,282	1231	6,051
90	5,400	1.02	1.31	7,334	1303	6,031
95	5,700	0.97	1.24	7,348	1376	5,973
100	6,000	0.92	1.18	7,323	1448	5,875
105	6,300	0.87	1.12	7,260	1520	5,740
110	6,600	0.82	1.05	7,159	1593	5,566
115	6,900	0.77	0.99	7,019	1665	5,353
120	7,200	0.72	0.92	6,840	1738	5,102
180	10,800	0.50	0.64	7,045	2606	4,439
360	21,600	0.27	0.35	7,582	5213	2,369
720	43,200	0.15	0.20	8,465	10425	0
1440	86,400	0.09	0.11	9,556	20850	0

PROJECT:	**KN 24394 US20, Arco to Idaho Falls**				**[Linked Data]**
BASIN:	2-4 L	Sta 6059-6078			**[User Input Data]**
DESIGNER:	**BCC, DEA**	**REPORTS TO:**	**SW-6004-L**		**[Calculated Data]**
DATE:	**9/29/2025**				

Bio-Infiltration Swales

Lowpoint Swale (Priority 1):

Width (feet):	0
Length (feet):	0
Sideslope 1 (H:V):	0
Sideslope 2 (H:V):	0
Max Depth (feet):	0
Max Volume When Full (CF):	0
LP Swale Infiltration Area (SF):	0

Road Slope Swale (Priority 2):	**Roadside Slope A**	**Roadside Slope B**
Base Width (feet):	2	0
Sideslope 1: (_H:1V)	2	0
Sideslope 2: (_H:V)	4	0
Longitudinal Slope (ft/ft):	0.0027	0.0000

Determination of Max Usable Swale Length Due to Slope:

Max Water Depth At Downstream End (feet):	*1.5*	*0.0*
Swale Volume (CF):	*2083*	*0*
Length (feet):	*556*	*0*

Determination of Length of Bermed Swales:

Swale Length (feet):	500		0	
Storage Depth at U/S End (feet):	0.15		0.00	
Swale Volume (CF):	2074		0	
Infiltration Area Per Bermed Swale (SF):	3475		0	
Number of Bermed Swales:	3		0	
Total Swale Infiltration Area (SF):	10425		0	
Total Swale Volume (CF):	6221		0	
Available Length 1 (feet):	1900		0	
Proposed Length 2 (feet):	1500		0	
Difference (feet):	400	OK! (Design> Req'd	0	No Good (Design< Storage)

Total Design Storage (CF):	**6,221**
Total Infiltration Area (SF):	10,425
Swale Infiltration Rate (cfs):	0.241
Total Infiltration Rate (cfs):	0.241
Total Time to Drain (Hrs):	6.97

Required Treatment Volume:		
Basin Imp. Area x 0.5 inches /12 (CF)	1,844	OK! (Design> Req'd)
Required Storage Volume:		
Maximum Storage From Rational Column #7 (CF):	6,051	OK! (Design> Req'd)
Target Time to Drain:		
From Design Requirements (Hrs):	72	OK! (Design<Req'd)

PROJECT:	**KN 24394 US20, Arco to Idaho Falls**				**[Linked Data]**
BASIN:	2-5 M	Sta 6069-6078			**[User Input Data]**
DESIGNER:	**BCC, DEA**	**REPORTS TO:**	**SW-6069-M**		**[Calculated Data]**
DATE:	**9/29/2025**				

Basin Data

	SF	Acre	C
Impervious Area	36,776	0.844	0.9
Pervious Area	72,838	1.672	0.2
Total Area	109,614	2.516	

Composite "C"	0.43
Area * "C"	1.094

			Rational Method Peak Flows (Q=C*I*A)		
Time of Concentration:	10.00	min			
25-Year Intensity	3.61	in/hr	25-year Peak	3.98	cfs
50-Year Intensity	4.16	in/hr	50-year Peak	4.59	cfs
100-year Intensity:	4.69	in/hr	100-year Peak	5.17	cfs

Selected Design Storm:	100-Year
Design Infiltration Rate (in/hr):	1.00

PROJECT:	**KN 24394 US20, Arco to Idaho Falls**			
BASIN:	2-5 M	Sta 6069-6078		
DESIGNER:	**BCC, DEA**	**REPORTS TO:**	**SW-6069-M**	
DATE:	**9/29/2025**			

[Linked Data]
[User Input Data]
[Calculated Data]

MODIFIED RATIONAL METHOD (BOWSTRING) FOR REQUIRED DETENTION STORAGE

#1 Time Inc. (min.)	#2 Time Inc. (sec.) (#1*60)	#3 Intensity (in./hr.)	#4 Q dev. (cfs) (A*C*#3)	#5 V in (cu. ft.)	#6 V out (cu. ft.) (Outf.*#2)	#7 Req. Storage (cu. ft.) (#5-#6)
10.00	600.00	4.69	5.17	4,161	164	3,996
5	300	6.77	7.41	2,978	82	2,896
10	600	4.69	5.13	4,126	164	3,962
15	900	3.64	3.98	4,397	246	4,151
20	1,200	3.16	3.46	4,860	328	4,532
25	1,500	2.69	2.94	5,010	411	4,599
30	1,800	2.21	2.42	4,846	493	4,354
35	2,100	2.06	2.26	5,198	575	4,623
40	2,400	1.91	2.09	5,452	657	4,795
45	2,700	1.77	1.93	5,609	739	4,870
50	3,000	1.62	1.77	5,668	821	4,847
55	3,300	1.47	1.61	5,630	903	4,727
60	3,600	1.32	1.44	5,495	985	4,509
65	3,900	1.27	1.39	5,703	1067	4,636
70	4,200	1.22	1.34	5,879	1150	4,730
75	4,500	1.17	1.28	6,022	1232	4,791
80	4,800	1.12	1.23	6,133	1314	4,819
85	5,100	1.07	1.17	6,210	1396	4,814
90	5,400	1.02	1.12	6,255	1478	4,777
95	5,700	0.97	1.06	6,267	1560	4,707
100	6,000	0.92	1.01	6,246	1642	4,604
105	6,300	0.87	0.95	6,192	1724	4,468
110	6,600	0.82	0.90	6,105	1806	4,299
115	6,900	0.77	0.84	5,986	1888	4,097
120	7,200	0.72	0.79	5,833	1971	3,863
180	10,800	0.50	0.55	6,009	2956	3,053
360	21,600	0.27	0.30	6,466	5912	554
720	43,200	0.15	0.17	7,219	11824	0
1440	86,400	0.09	0.09	8,150	23647	0

PROJECT:	**KN 24394 US20, Arco to Idaho Falls**			[Linked Data]
BASIN:	2-5 M	Sta 6069-6078		[User Input Data]
DESIGNER:	**BCC, DEA**	**REPORTS TO:**	**SW-6069-M**	[Calculated Data]
DATE:	**9/29/2025**			

Bio-Infiltration Swales

Lowpoint Swale (Priority 1):

Width (feet):	0
Length (feet):	0
Sideslope 1 (H:V):	0
Sideslope 2 (H:V):	0
Max Depth (feet):	0
Max Volume When Full (CF):	0
LP Swale Infiltration Area (SF):	0

Road Slope Swale (Priority 2):	**Roadside Slope A**	**Roadside Slope B**
Base Width (feet):	0	0
Sideslope 1: (_H:1V)	6	0
Sideslope 2: (_H:V)	6	0
Longitudinal Slope (ft/ft):	0.0027	0.0000
Determination of Max Usable Swale Length Due to Slope:		
Max Water Depth At Downstream End (feet):	*1.5*	*0.0*
Swale Volume (CF):	*2500*	*0*
Length (feet):	*556*	*0*
Determination of Length of Bermed Swales:		
Swale Length (feet):	300	0
Storage Depth at U/S End (feet):	0.69	0.00
Swale Volume (CF):	2256	0
Infiltration Area Per Bermed Swale (SF):	3941	0
Number of Bermed Swales:	3	0
Total Swale Infiltration Area (SF):	11824	0
Total Swale Volume (CF):	6769	0
Available Length 1 (feet):	900	0
Proposed Length 2 (feet):	900	0
Difference (feet):	0	OK! (Design> Req'd
	0	No Good (Design< Storage)

Total Design Storage (CF):	**6,769**
Total Infiltration Area (SF):	11,824
Swale Infiltration Rate (cfs):	0.274
Total Infiltration Rate (cfs):	0.274
Total Time to Drain (Hrs):	4.94

Required Treatment Volume:		
Basin Imp. Area x 0.5 inches /12 (CF)	1,532	OK! (Design> Req'd)
Required Storage Volume:		
Maximum Storage From Rational Column #7 (CF):	4,870	OK! (Design> Req'd)
Target Time to Drain:		
From Design Requirements (Hrs):	72	OK! (Design<Req'd)

PROJECT:	**KN 24394 US20, Arco to Idaho Falls**				**[Linked Data]**
BASIN:	2-5 M	Sta 6078-6095			**[User Input Data]**
DESIGNER:	**BCC, DEA**	**REPORTS TO:**	**SW-6069-M**		**[Calculated Data]**
DATE:	**9/29/2025**				

Basin Data

	SF	Acre	C
Impervious Area	69,466	1.595	0.9
Pervious Area	137,582	3.158	0.2
Total Area	207,049	4.753	

Composite "C"	0.43	
Area * "C"	2.067	

			Rational Method Peak Flows (Q=C*I*A)		
Time of Concentration:	10.00	min			
25-Year Intensity	3.61	in/hr	25-year Peak	7.52	cfs
50-Year Intensity	4.16	in/hr	50-year Peak	8.67	cfs
100-year Intensity:	4.69	in/hr	100-year Peak	9.77	cfs

Selected Design Storm:	100-Year
Design Infiltration Rate (in/hr):	1.00

PROJECT:	**KN 24394 US20, Arco to Idaho Falls**			
BASIN:	2-5 M	Sta 6078-6095		
DESIGNER:	**BCC, DEA**	**REPORTS TO:**	**SW-6069-M**	
DATE:	**9/29/2025**			

[Linked Data]
[User Input Data]
[Calculated Data]

MODIFIED RATIONAL METHOD (BOWSTRING) FOR REQUIRED DETENTION STORAGE

#1 Time Inc. (min.)	#2 Time Inc. (sec.) (#1*60)	#3 Intensity (in./hr.)	#4 Q dev. (cfs) (A*C*#3)	#5 V in (cu. ft.)	#6 V out (cu. ft.) (Outf.*#2)	#7 Req. Storage (cu. ft.) (#5-#6)
10.00	600.00	4.69	9.77	7,859	268	7,591
5	300	6.77	13.99	5,625	134	5,491
10	600	4.69	9.69	7,794	268	7,526
15	900	3.64	7.52	8,306	402	7,904
20	1,200	3.16	6.54	9,180	536	8,644
25	1,500	2.69	5.55	9,463	670	8,792
30	1,800	2.21	4.57	9,154	804	8,350
35	2,100	2.06	4.26	9,818	938	8,880
40	2,400	1.91	3.95	10,298	1073	9,226
45	2,700	1.77	3.65	10,594	1207	9,388
50	3,000	1.62	3.34	10,706	1341	9,366
55	3,300	1.47	3.03	10,635	1475	9,160
60	3,600	1.32	2.73	10,379	1609	8,770
65	3,900	1.27	2.63	10,773	1743	9,030
70	4,200	1.22	2.52	11,105	1877	9,229
75	4,500	1.17	2.42	11,376	2011	9,365
80	4,800	1.12	2.31	11,584	2145	9,439
85	5,100	1.07	2.21	11,730	2279	9,451
90	5,400	1.02	2.11	11,815	2413	9,402
95	5,700	0.97	2.00	11,837	2547	9,290
100	6,000	0.92	1.90	11,797	2681	9,116
105	6,300	0.87	1.80	11,696	2815	8,880
110	6,600	0.82	1.69	11,532	2949	8,583
115	6,900	0.77	1.59	11,306	3083	8,223
120	7,200	0.72	1.49	11,019	3218	7,801
180	10,800	0.50	1.03	11,350	4826	6,523
360	21,600	0.27	0.56	12,213	9653	2,561
720	43,200	0.15	0.31	13,636	19305	0
1440	86,400	0.09	0.18	15,394	38610	0

PROJECT:	**KN 24394 US20, Arco to Idaho Falls**				[Linked Data]
BASIN:	2-5 M	Sta 6078-6095			[User Input Data]
DESIGNER:	**BCC, DEA**	**REPORTS TO:**	**SW-6069-M**		[Calculated Data]
DATE:	**9/29/2025**				

Bio-Infiltration Swales

Lowpoint Swale (Priority 1):

Width (feet):	0
Length (feet):	0
Sideslope 1 (H:V):	0
Sideslope 2 (H:V):	0
Max Depth (feet):	0
Max Volume When Full (CF):	0
LP Swale Infiltration Area (SF):	0

Road Slope Swale (Priority 2):	**Roadside Slope A**	**Roadside Slope B**
Base Width (feet):	0	0
Sideslope 1: (_H:1V)	6	0
Sideslope 2: (_H:V)	6	0
Longitudinal Slope (ft/ft):	0.0070	0.0000

Determination of Max Usable Swale Length Due to Slope:

Max Water Depth At Downstream End (feet):	*1.5*	*0.0*
Swale Volume (CF):	*964*	*0*
Length (feet):	*214*	*0*

Determination of Length of Bermed Swales:

Swale Length (feet):	150		0	
Storage Depth at U/S End (feet):	0.45		0.00	
Swale Volume (CF):	938		0	
Infiltration Area Per Bermed Swale (SF):	1755		0	
Number of Bermed Swales:	11		0	
Total Swale Infiltration Area (SF):	19305		0	
Total Swale Volume (CF):	10321		0	
Available Length 1 (feet):	1700		0	
Proposed Length 2 (feet):	1650		0	
Difference (feet):	50	OK! (Design> Req'd	0	No Good (Design< Storage)

Total Design Storage (CF):	**10,321**
Total Infiltration Area (SF):	19,305
Swale Infiltration Rate (cfs):	0.447
Total Infiltration Rate (cfs):	0.447
Total Time to Drain (Hrs):	5.88

Required Treatment Volume:		
Basin Imp. Area x 0.5 inches /12 (CF)	2,894	OK! (Design> Req'd)
Required Storage Volume:		
Maximum Storage From Rational Column #7 (CF):	9,451	OK! (Design> Req'd)
Target Time to Drain:		
From Design Requirements (Hrs):	72	OK! (Design<Req'd)

PROJECT:	**KN 24394 US20, Arco to Idaho Falls**				**[Linked Data]**
BASIN:	2-5 M	Sta 6095-6115			**[User Input Data]**
DESIGNER:	**BCC, DEA**	**REPORTS TO:**	**SW-6069-M**		**[Calculated Data]**
DATE:	**9/29/2025**				

Basin Data

	SF	Acre	C
Impervious Area	81,725	1.876	0.9
Pervious Area	161,862	3.716	0.2
Total Area	243,587	5.592	

Composite "C"	0.43	
Area * "C"	2.432	

			Rational Method Peak Flows (Q=C*I*A)		
Time of Concentration:	10.00	min			
25-Year Intensity	3.61	in/hr	25-year Peak	8.85	cfs
50-Year Intensity	4.16	in/hr	50-year Peak	10.20	cfs
100-year Intensity:	4.69	in/hr	100-year Peak	11.50	cfs

Selected Design Storm:	100-Year
Design Infiltration Rate (in/hr):	1.00

PROJECT:	**KN 24394 US20, Arco to Idaho Falls**				**[Linked Data]**
BASIN:	2-5 M	Sta 6095-6115			**[User Input Data]**
DESIGNER:	**BCC, DEA**	**REPORTS TO:**	**SW-6069-M**		**[Calculated Data]**
DATE:	**9/29/2025**				

MODIFIED RATIONAL METHOD (BOWSTRING) FOR REQUIRED DETENTION STORAGE

#1 Time Inc. (min.)	#2 Time Inc. (sec.) (#1*60)	#3 Intensity (in./hr.)	#4 Q dev. (cfs) (A*C*#3)	#5 V in (cu. ft.)	#6 V out (cu. ft.) (Outf.*#2)	#7 Req. Storage (cu. ft.) (#5-#6)
10.00	600.00	4.69	11.50	9,246	341	8,904
5	300	6.77	16.46	6,618	171	6,447
10	600	4.69	11.40	9,169	341	8,828
15	900	3.64	8.85	9,772	512	9,260
20	1,200	3.16	7.69	10,800	683	10,117
25	1,500	2.69	6.53	11,133	853	10,279
30	1,800	2.21	5.37	10,770	1024	9,746
35	2,100	2.06	5.01	11,551	1195	10,356
40	2,400	1.91	4.65	12,116	1365	10,750
45	2,700	1.77	4.29	12,464	1536	10,928
50	3,000	1.62	3.93	12,596	1707	10,889
55	3,300	1.47	3.57	12,511	1877	10,634
60	3,600	1.32	3.21	12,210	2048	10,162
65	3,900	1.27	3.09	12,674	2219	10,456
70	4,200	1.22	2.97	13,065	2389	10,676
75	4,500	1.17	2.85	13,383	2560	10,823
80	4,800	1.12	2.72	13,628	2731	10,898
85	5,100	1.07	2.60	13,801	2901	10,899
90	5,400	1.02	2.48	13,900	3072	10,828
95	5,700	0.97	2.36	13,926	3243	10,684
100	6,000	0.92	2.24	13,879	3413	10,466
105	6,300	0.87	2.12	13,760	3584	10,176
110	6,600	0.82	1.99	13,567	3755	9,813
115	6,900	0.77	1.87	13,302	3925	9,376
120	7,200	0.72	1.75	12,963	4096	8,867
180	10,800	0.50	1.21	13,352	6144	7,209
360	21,600	0.27	0.66	14,369	12288	2,081
720	43,200	0.15	0.37	16,043	24575	0
1440	86,400	0.09	0.21	18,111	49150	0

PROJECT:	**KN 24394 US20, Arco to Idaho Falls**				[Linked Data]
BASIN:	2-5 M	Sta 6095-6115			[User Input Data]
DESIGNER:	**BCC, DEA**	**REPORTS TO:**	**SW-6069-M**		[Calculated Data]
DATE:	**9/29/2025**				

Bio-Infiltration Swales

Lowpoint Swale (Priority 1):

Width (feet):	0
Length (feet):	0
Sideslope 1 (H:V):	0
Sideslope 2 (H:V):	0
Max Depth (feet):	0
Max Volume When Full (CF):	0
LP Swale Infiltration Area (SF):	0

Road Slope Swale (Priority 2):	**Roadside Slope A**	**Roadside Slope B**
Base Width (feet):	40	0
Sideslope 1: (_H:1V)	6	0
Sideslope 2: (_H:V)	6	0
Longitudinal Slope (ft/ft):	0.0118	0.0000

Determination of Max Usable Swale Length Due to Slope:

Max Water Depth At Downstream End (feet):	*1.5*	*0.0*
Swale Volume (CF):	*4386*	*0*
Length (feet):	*127*	*0*

Determination of Length of Bermed Swales:

Swale Length (feet):	125	0
Storage Depth at U/S End (feet):	0.03	0.00
Swale Volume (CF):	4385	0
Infiltration Area Per Bermed Swale (SF):	6144	0
Number of Bermed Swales:	4	0
Total Swale Infiltration Area (SF):	24575	0
Total Swale Volume (CF):	17538	0
Available Length 1 (feet):	2000	0
Proposed Length 2 (feet):	500	0
Difference (feet):	1500	0

OK! (Design> Req'd

No Good (Design< Storage)

Total Design Storage (CF):	**17,538**
Total Infiltration Area (SF):	24,575
Swale Infiltration Rate (cfs):	0.569
Total Infiltration Rate (cfs):	0.569
Total Time to Drain (Hrs):	5.34

Required Treatment Volume:

Basin Imp. Area x 0.5 inches /12 (CF): 3,405 OK! (Design> Req'd)

Required Storage Volume:

Maximum Storage From Rational Column #7 (CF): 10,928 OK! (Design> Req'd)

Target Time to Drain:

From Design Requirements (Hrs): 72 OK! (Design<Req'd)

PROJECT:	**KN 24394 US20, Arco to Idaho Falls**				**[Linked Data]**
BASIN:	2-5 M	Sta 6115-6138			**[User Input Data]**
DESIGNER:	**BCC, DEA**	**REPORTS TO:**	**SW-6069-M**		**[Calculated Data]**
DATE:	**9/29/2025**				

Basin Data

	SF	Acre	C
Impervious Area	96,027	2.204	0.9
Pervious Area	190,187	4.366	0.2
Total Area	286,214	6.571	

Composite "C"	0.43	
Area * "C"	2.857	

			Rational Method Peak Flows (Q=C*I*A)		
Time of Concentration:	10.00	min			
25-Year Intensity	3.61	in/hr	25-year Peak	10.40	cfs
50-Year Intensity	4.16	in/hr	50-year Peak	11.99	cfs
100-year Intensity:	4.69	in/hr	100-year Peak	13.51	cfs

Selected Design Storm:	100-Year
Design Infiltration Rate (in/hr):	1.00

PROJECT:	**KN 24394 US20, Arco to Idaho Falls**			
BASIN:	2-5 M	Sta 6115-6138		
DESIGNER:	**BCC, DEA**	**REPORTS TO:**	**SW-6069-M**	
DATE:	**9/29/2025**			

[Linked Data]
[User Input Data]
[Calculated Data]

MODIFIED RATIONAL METHOD (BOWSTRING) FOR REQUIRED DETENTION STORAGE

#1 Time Inc. (min.)	#2 Time Inc. (sec.) (#1*60)	#3 Intensity (in./hr.)	#4 Q dev. (cfs) (A*C*#3)	#5 V in (cu. ft.)	#6 V out (cu. ft.) (Outf.*#2)	#7 Req. Storage (cu. ft.) (#5-#6)
10.00	600.00	4.69	13.51	10,864	434	10,430
5	300	6.77	19.34	7,776	217	7,559
10	600	4.69	13.40	10,774	434	10,340
15	900	3.64	10.40	11,482	650	10,832
20	1,200	3.16	9.04	12,690	867	11,823
25	1,500	2.69	7.68	13,081	1084	11,997
30	1,800	2.21	6.31	12,654	1301	11,354
35	2,100	2.06	5.89	13,572	1517	12,055
40	2,400	1.91	5.47	14,236	1734	12,502
45	2,700	1.77	5.04	14,645	1951	12,694
50	3,000	1.62	4.62	14,800	2168	12,632
55	3,300	1.47	4.20	14,701	2384	12,316
60	3,600	1.32	3.77	14,347	2601	11,746
65	3,900	1.27	3.63	14,892	2818	12,074
70	4,200	1.22	3.49	15,352	3035	12,317
75	4,500	1.17	3.34	15,725	3251	12,474
80	4,800	1.12	3.20	16,013	3468	12,545
85	5,100	1.07	3.06	16,216	3685	12,531
90	5,400	1.02	2.91	16,332	3902	12,431
95	5,700	0.97	2.77	16,363	4118	12,245
100	6,000	0.92	2.63	16,308	4335	11,973
105	6,300	0.87	2.49	16,168	4552	11,616
110	6,600	0.82	2.34	15,941	4769	11,173
115	6,900	0.77	2.20	15,629	4985	10,644
120	7,200	0.72	2.06	15,232	5202	10,030
180	10,800	0.50	1.43	15,689	7803	7,886
360	21,600	0.27	0.77	16,883	15606	1,277
720	43,200	0.15	0.43	18,850	31212	0
1440	86,400	0.09	0.25	21,281	62424	0

PROJECT:	**KN 24394 US20, Arco to Idaho Falls**				[Linked Data]
BASIN:	2-5 M	Sta 6115-6138			[User Input Data]
DESIGNER:	**BCC, DEA**	**REPORTS TO:**	**SW-6069-M**		[Calculated Data]
DATE:	**9/29/2025**				

Bio-Infiltration Swales

Lowpoint Swale (Priority 1):

Width (feet):	0
Length (feet):	0
Sideslope 1 (H:V):	0
Sideslope 2 (H:V):	0
Max Depth (feet):	0
Max Volume When Full (CF):	0
LP Swale Infiltration Area (SF):	0

Road Slope Swale (Priority 2):	**Roadside Slope A**	**Roadside Slope B**
Base Width (feet):	30	0
Sideslope 1: (_H:1V)	2	0
Sideslope 2: (_H:V)	4	0
Longitudinal Slope (ft/ft):	0.0032	0.0000

Determination of Max Usable Swale Length Due to Slope:

Max Water Depth At Downstream End (feet):	*1.5*	*0.0*
Swale Volume (CF):	*11602*	*0*
Length (feet):	*469*	*0*

Determination of Length of Bermed Swales:

Swale Length (feet):	450	0
Storage Depth at U/S End (feet):	0.06	0.00
Swale Volume (CF):	11585	0
Infiltration Area Per Bermed Swale (SF):	15606	0
Number of Bermed Swales:	2	0
Total Swale Infiltration Area (SF):	31212	0
Total Swale Volume (CF):	23169	0
Available Length 1 (feet):	2350	0
Proposed Length 2 (feet):	900	0
Difference (feet):	1450	0

OK! (Design> Req'd

No Good (Design< Storage)

Total Design Storage (CF):	**23,169**
Total Infiltration Area (SF):	31,212
Swale Infiltration Rate (cfs):	0.723
Total Infiltration Rate (cfs):	0.723
Total Time to Drain (Hrs):	4.88

Required Treatment Volume:

Basin Imp. Area x 0.5 inches /12 (CF): 4,001 — OK! (Design> Req'd)

Required Storage Volume:

Maximum Storage From Rational Column #7 (CF): 12,694 — OK! (Design> Req'd)

Target Time to Drain:

From Design Requirements (Hrs): 72 — OK! (Design<Req'd)

PROJECT:	**KN 24394 US20, Arco to Idaho Falls**				**[Linked Data]**
BASIN:	2-5 L				**[User Input Data]**
DESIGNER:	**BCC, DEA**	**REPORTS TO:**	**SW-6078-L**		**[Calculated Data]**
DATE:	**9/29/2025**				

Basin Data

	SF	Acre	C
Impervious Area	39,621	0.910	0.9
Pervious Area	86,876	1.994	0.2
Total Area	126,497	2.904	

Composite "C"	0.42
Area * "C"	1.217

			Rational Method Peak Flows (Q=C*I*A)		
Time of Concentration:	10.00	min			
25-Year Intensity	3.61	in/hr	25-year Peak	4.43	cfs
50-Year Intensity	4.16	in/hr	50-year Peak	5.11	cfs
100-year Intensity:	4.69	in/hr	100-year Peak	5.76	cfs

Selected Design Storm: 100-Year

Design Infiltration Rate (in/hr): 1.00

PROJECT:	**KN 24394 US20, Arco to Idaho Falls**			
BASIN:	2-5 L			
DESIGNER:	**BCC, DEA**	**REPORTS TO:**	**SW-6078-L**	
DATE:	**9/29/2025**			

[Linked Data]
[User Input Data]
[Calculated Data]

MODIFIED RATIONAL METHOD (BOWSTRING) FOR REQUIRED DETENTION STORAGE

#1 Time Inc. (min.)	#2 Time Inc. (sec.) (#1*60)	#3 Intensity (in./hr.)	#4 Q dev. (cfs) (A*C*#3)	#5 V in (cu. ft.)	#6 V out (cu. ft.) (Outf.*#2)	#7 Req. Storage (cu. ft.) (#5-#6)
10.00	600.00	4.69	5.76	4,629	151	4,478
5	300	6.77	8.24	3,313	76	3,238
10	600	4.69	5.71	4,591	151	4,440
15	900	3.64	4.43	4,893	227	4,666
20	1,200	3.16	3.85	5,407	302	5,105
25	1,500	2.69	3.27	5,574	378	5,196
30	1,800	2.21	2.69	5,392	453	4,939
35	2,100	2.06	2.51	5,783	529	5,254
40	2,400	1.91	2.33	6,066	604	5,462
45	2,700	1.77	2.15	6,240	680	5,560
50	3,000	1.62	1.97	6,306	756	5,551
55	3,300	1.47	1.79	6,264	831	5,433
60	3,600	1.32	1.61	6,113	907	5,207
65	3,900	1.27	1.55	6,346	982	5,363
70	4,200	1.22	1.49	6,541	1058	5,484
75	4,500	1.17	1.42	6,701	1133	5,567
80	4,800	1.12	1.36	6,823	1209	5,615
85	5,100	1.07	1.30	6,910	1284	5,625
90	5,400	1.02	1.24	6,959	1360	5,599
95	5,700	0.97	1.18	6,972	1436	5,537
100	6,000	0.92	1.12	6,949	1511	5,438
105	6,300	0.87	1.06	6,889	1587	5,303
110	6,600	0.82	1.00	6,793	1662	5,131
115	6,900	0.77	0.94	6,660	1738	4,922
120	7,200	0.72	0.88	6,490	1813	4,677
180	10,800	0.50	0.61	6,685	2720	3,965
360	21,600	0.27	0.33	7,194	5440	1,754
720	43,200	0.15	0.19	8,032	10880	0
1440	86,400	0.09	0.10	9,068	21760	0

PROJECT:	**KN 24394 US20, Arco to Idaho Falls**				**[Linked Data]**
BASIN:	2-5 L				**[User Input Data]**
DESIGNER:	**BCC, DEA**	**REPORTS TO:**	**SW-6078-L**		**[Calculated Data]**
DATE:	**9/29/2025**				

Bio-Infiltration Swales

Lowpoint Swale (Priority 1):

Width (feet):	0
Length (feet):	0
Sideslope 1 (H:V):	0
Sideslope 2 (H:V):	0
Max Depth (feet):	0
Max Volume When Full (CF):	0
LP Swale Infiltration Area (SF):	0

Road Slope Swale (Priority 2):	**Roadside Slope A**	**Roadside Slope B**
Base Width (feet):	2	0
Sideslope 1: (_H:1V)	2	0
Sideslope 2: (_H:V)	4	0
Longitudinal Slope (ft/ft):	0.0070	0.0000

Determination of Max Usable Swale Length Due to Slope:

Max Water Depth At Downstream End (feet):	*1.5*	*0.0*
Swale Volume (CF):	*804*	*0*
Length (feet):	*214*	*0*

Determination of Length of Bermed Swales:

Swale Length (feet):	200	0
Storage Depth at U/S End (feet):	0.10	0.00
Swale Volume (CF):	802	0
Infiltration Area Per Bermed Swale (SF):	1360	0
Number of Bermed Swales:	8	0
Total Swale Infiltration Area (SF):	10880	0
Total Swale Volume (CF):	6416	0
Available Length 1 (feet):	1700	0
Proposed Length 2 (feet):	1600	0
Difference (feet):	100	0

OK! (Design> Req'd **No Good (Design< Storage)**

Total Design Storage (CF):	**6,416**
Total Infiltration Area (SF):	10,880
Swale Infiltration Rate (cfs):	0.252
Total Infiltration Rate (cfs):	0.252
Total Time to Drain (Hrs):	6.20

Required Treatment Volume:

Basin Imp. Area x 0.5 inches /12 (CF): 1,651 **OK! (Design> Req'd)**

Required Storage Volume:

Maximum Storage From Rational Column #7 (CF): 5,625 **OK! (Design> Req'd)**

Target Time to Drain:

From Design Requirements (Hrs): 72 **OK! (Design<Req'd)**

PROJECT:	**KN 24394 US20, Arco to Idaho Falls**				**[Linked Data]**
BASIN:	2-5 L				**[User Input Data]**
DESIGNER:	**BCC, DEA**	**REPORTS TO:**	**SW-6078-L**		**[Calculated Data]**
DATE:	**9/29/2025**				

Basin Data

	SF	Acre	C
Impervious Area	46,613	1.070	0.9
Pervious Area	102,207	2.346	0.2
Total Area	148,820	3.416	

Composite "C"	0.42	
Area * "C"	1.432	

			Rational Method Peak Flows (Q=C*I*A)		
Time of Concentration:	10.00	min			
25-Year Intensity	3.61	in/hr	25-year Peak	5.21	cfs
50-Year Intensity	4.16	in/hr	50-year Peak	6.01	cfs
100-year Intensity:	4.69	in/hr	100-year Peak	6.77	cfs

Selected Design Storm:	100-Year
Design Infiltration Rate (in/hr):	1.00

PROJECT:	**KN 24394 US20, Arco to Idaho Falls**			
BASIN:	2-5 L			
DESIGNER:	**BCC, DEA**	**REPORTS TO:**	**SW-6078-L**	
DATE:	**9/29/2025**			

[Linked Data]
[User Input Data]
[Calculated Data]

MODIFIED RATIONAL METHOD (BOWSTRING) FOR REQUIRED DETENTION STORAGE

#1 Time Inc. (min.)	#2 Time Inc. (sec.) (#1*60)	#3 Intensity (in./hr.)	#4 Q dev. (cfs) (A*C*#3)	#5 V in (cu. ft.)	#6 V out (cu. ft.) (Outf.*#2)	#7 Req. Storage (cu. ft.) (#5-#6)
10.00	600.00	4.69	6.77	5,446	171	5,275
5	300	6.77	9.70	3,898	86	3,813
10	600	4.69	6.72	5,401	171	5,230
15	900	3.64	5.21	5,756	257	5,499
20	1,200	3.16	4.53	6,362	342	6,019
25	1,500	2.69	3.85	6,557	428	6,129
30	1,800	2.21	3.17	6,344	514	5,830
35	2,100	2.06	2.95	6,804	599	6,204
40	2,400	1.91	2.74	7,136	685	6,452
45	2,700	1.77	2.53	7,342	771	6,571
50	3,000	1.62	2.32	7,419	856	6,563
55	3,300	1.47	2.10	7,369	942	6,428
60	3,600	1.32	1.89	7,192	1027	6,165
65	3,900	1.27	1.82	7,466	1113	6,353
70	4,200	1.22	1.75	7,696	1199	6,497
75	4,500	1.17	1.68	7,883	1284	6,599
80	4,800	1.12	1.60	8,028	1370	6,658
85	5,100	1.07	1.53	8,129	1455	6,674
90	5,400	1.02	1.46	8,187	1541	6,646
95	5,700	0.97	1.39	8,203	1627	6,576
100	6,000	0.92	1.32	8,175	1712	6,463
105	6,300	0.87	1.25	8,105	1798	6,307
110	6,600	0.82	1.17	7,991	1883	6,108
115	6,900	0.77	1.10	7,835	1969	5,866
120	7,200	0.72	1.03	7,636	2055	5,581
180	10,800	0.50	0.71	7,865	3082	4,783
360	21,600	0.27	0.39	8,464	6164	2,300
720	43,200	0.15	0.22	9,450	12328	0
1440	86,400	0.09	0.12	10,668	24656	0

PROJECT:	**KN 24394 US20, Arco to Idaho Falls**				[Linked Data]
BASIN:	2-5 L				[User Input Data]
DESIGNER:	**BCC, DEA**	**REPORTS TO:**	**SW-6078-L**		[Calculated Data]
DATE:	**9/29/2025**				

Bio-Infiltration Swales

Lowpoint Swale (Priority 1):

Width (feet):	0
Length (feet):	0
Sideslope 1 (H:V):	0
Sideslope 2 (H:V):	0
Max Depth (feet):	0
Max Volume When Full (CF):	0
LP Swale Infiltration Area (SF):	0

Road Slope Swale (Priority 2):	**Roadside Slope A**	**Roadside Slope B**
Base Width (feet):	2	0
Sideslope 1: (_H:1V)	2	0
Sideslope 2: (_H:V)	4	0
Longitudinal Slope (ft/ft):	0.0118	0.0000

Determination of Max Usable Swale Length Due to Slope:

Max Water Depth At Downstream End (feet):	*1.5*	*0.0*
Swale Volume (CF):	*477*	*0*
Length (feet):	*127*	*0*

Determination of Length of Bermed Swales:

Swale Length (feet):	125	0
Storage Depth at U/S End (feet):	0.03	0.00
Swale Volume (CF):	477	0
Infiltration Area Per Bermed Swale (SF):	822	0
Number of Bermed Swales:	15	0
Total Swale Infiltration Area (SF):	12328	0
Total Swale Volume (CF):	7150	0
Available Length 1 (feet):	2000	0
Proposed Length 2 (feet):	1875	0
Difference (feet):	125 **OK! (Design> Req'd**	0 **No Good (Design< Storage)**

Total Design Storage (CF):	**7,150**
Total Infiltration Area (SF):	12,328
Swale Infiltration Rate (cfs):	0.285
Total Infiltration Rate (cfs):	0.285
Total Time to Drain (Hrs):	6.50

Required Treatment Volume:		
Basin Imp. Area x 0.5 inches /12 (CF)	1,942	**OK! (Design> Req'd)**
Required Storage Volume:		
Maximum Storage From Rational Column #7 (CF):	6,674	**OK! (Design> Req'd)**
Target Time to Drain:		
From Design Requirements (Hrs):	72	**OK! (Design<Req'd)**

PROJECT:	**KN 24394 US20, Arco to Idaho Falls**				**[Linked Data]**
BASIN:	2-5 L				**[User Input Data]**
DESIGNER:	**BCC, DEA**	**REPORTS TO:**	**SW-6078-L**		**[Calculated Data]**
DATE:	**9/29/2025**				

Basin Data

	SF	Acre	C
Impervious Area	54,770	1.257	0.9
Pervious Area	120,094	2.757	0.2
Total Area	174,864	4.014	

Composite "C"	0.42	
Area * "C"	1.683	

			Rational Method Peak Flows (Q=C*I*A)		
Time of Concentration:	10.00	min			
25-Year Intensity	3.61	in/hr	25-year Peak	6.13	cfs
50-Year Intensity	4.16	in/hr	50-year Peak	7.06	cfs
100-year Intensity:	4.69	in/hr	100-year Peak	7.96	cfs

Selected Design Storm:	100-Year
Design Infiltration Rate (in/hr):	1.00

PROJECT:	**KN 24394 US20, Arco to Idaho Falls**			
BASIN:	2-5 L			
DESIGNER:	**BCC, DEA**	**REPORTS TO:**	**SW-6078-L**	
DATE:	**9/29/2025**			

[Linked Data]
[User Input Data]
[Calculated Data]

MODIFIED RATIONAL METHOD (BOWSTRING) FOR REQUIRED DETENTION STORAGE

#1 Time Inc. (min.)	#2 Time Inc. (sec.) (#1*60)	#3 Intensity (in./hr.)	#4 Q dev. (cfs) (A*C*#3)	#5 V in (cu. ft.)	#6 V out (cu. ft.) (Outf.*#2)	#7 Req. Storage (cu. ft.) (#5-#6)
10.00	600.00	4.69	7.96	6,399	209	6,190
5	300	6.77	11.39	4,580	104	4,476
10	600	4.69	7.89	6,346	209	6,137
15	900	3.64	6.13	6,763	313	6,450
20	1,200	3.16	5.32	7,475	418	7,057
25	1,500	2.69	4.52	7,705	522	7,183
30	1,800	2.21	3.72	7,454	626	6,828
35	2,100	2.06	3.47	7,994	731	7,264
40	2,400	1.91	3.22	8,385	835	7,550
45	2,700	1.77	2.97	8,626	939	7,687
50	3,000	1.62	2.72	8,718	1044	7,674
55	3,300	1.47	2.47	8,659	1148	7,511
60	3,600	1.32	2.22	8,451	1253	7,198
65	3,900	1.27	2.14	8,772	1357	7,415
70	4,200	1.22	2.05	9,043	1461	7,581
75	4,500	1.17	1.97	9,263	1566	7,697
80	4,800	1.12	1.88	9,432	1670	7,762
85	5,100	1.07	1.80	9,552	1774	7,777
90	5,400	1.02	1.72	9,620	1879	7,741
95	5,700	0.97	1.63	9,638	1983	7,655
100	6,000	0.92	1.55	9,606	2088	7,519
105	6,300	0.87	1.46	9,523	2192	7,331
110	6,600	0.82	1.38	9,390	2296	7,094
115	6,900	0.77	1.30	9,206	2401	6,806
120	7,200	0.72	1.21	8,972	2505	6,467
180	10,800	0.50	0.84	9,241	3758	5,484
360	21,600	0.27	0.46	9,945	7515	2,430
720	43,200	0.15	0.26	11,103	15030	0
1440	86,400	0.09	0.14	12,535	30060	0

PROJECT:	**KN 24394 US20, Arco to Idaho Falls**				[Linked Data]
BASIN:	2-5 L				[User Input Data]
DESIGNER:	**BCC, DEA**	**REPORTS TO:**	**SW-6078-L**		[Calculated Data]
DATE:	**9/29/2025**				

Bio-Infiltration Swales

Lowpoint Swale (Priority 1):

Width (feet):	0
Length (feet):	0
Sideslope 1 (H:V):	0
Sideslope 2 (H:V):	0
Max Depth (feet):	0
Max Volume When Full (CF):	0
LP Swale Infiltration Area (SF):	0

Road Slope Swale (Priority 2):	**Roadside Slope A**	**Roadside Slope B**
Base Width (feet):	2	0
Sideslope 1: (_H:1V)	2	0
Sideslope 2: (_H:V)	4	0
Longitudinal Slope (ft/ft):	0.0032	0.0000

Determination of Max Usable Swale Length Due to Slope:

Max Water Depth At Downstream End (feet):	*1.5*	*0.0*
Swale Volume (CF):	*1758*	*0*
Length (feet):	*469*	*0*

Determination of Length of Bermed Swales:

Swale Length (feet):	450	0
Storage Depth at U/S End (feet):	0.06	0.00
Swale Volume (CF):	1757	0
Infiltration Area Per Bermed Swale (SF):	3006	0
Number of Bermed Swales:	5	0
Total Swale Infiltration Area (SF):	15030	0
Total Swale Volume (CF):	8783	0
Available Length 1 (feet):	2350	0
Proposed Length 2 (feet):	2250	0
Difference (feet):	100	0

OK! (Design> Req'd

No Good (Design< Storage)

Total Design Storage (CF):	**8,783**
Total Infiltration Area (SF):	15,030
Swale Infiltration Rate (cfs):	0.348
Total Infiltration Rate (cfs):	0.348
Total Time to Drain (Hrs):	6.21

Required Treatment Volume:

Basin Imp. Area x 0.5 inches /12 (CF): 2,282 **OK! (Design> Req'd)**

Required Storage Volume:

Maximum Storage From Rational Column #7 (CF): 7,777 **OK! (Design> Req'd)**

Target Time to Drain:

From Design Requirements (Hrs): 72 **OK! (Design<Req'd)**

PROJECT:	**KN 24394 US20, Arco to Idaho Falls**				**[Linked Data]**
BASIN:	2-6 L	Sta 6158-6138			**[User Input Data]**
DESIGNER:	**BCC, DEA**	**REPORTS TO:**	**SW-6138-L**		**[Calculated Data]**
DATE:	**9/29/2025**				

Basin Data

	SF	Acre	C
Impervious Area	25,222	0.579	0.9
Pervious Area	83,582	1.919	0.2
Total Area	108,803	2.498	

Composite "C"	0.36
Area * "C"	0.905

Time of Concentration:	10.00	min
25-Year Intensity	3.61	in/hr
50-Year Intensity	4.16	in/hr
100-year Intensity:	4.69	in/hr

Rational Method Peak Flows (Q=C*I*A)

25-year Peak	3.29	cfs
50-year Peak	3.80	cfs
100-year Peak	4.28	cfs

Selected Design Storm: 100-Year

Design Infiltration Rate (in/hr): 1.00

PROJECT:	**KN 24394 US20, Arco to Idaho Falls**			
BASIN:	2-6 L	Sta 6158-6138		
DESIGNER:	**BCC, DEA**	**REPORTS TO:**	**SW-6138-L**	
DATE:	**9/29/2025**			

[Linked Data]
[User Input Data]
[Calculated Data]

MODIFIED RATIONAL METHOD (BOWSTRING) FOR REQUIRED DETENTION STORAGE

#1 Time Inc. (min.)	#2 Time Inc. (sec.) (#1*60)	#3 Intensity (in./hr.)	#4 Q dev. (cfs) (A*C*#3)	#5 V in (cu. ft.)	#6 V out (cu. ft.) (Outf.*#2)	#7 Req. Storage (cu. ft.) (#5-#6)
10.00	600.00	4.69	4.28	3,440	126	3,314
5	300	6.77	6.13	2,463	63	2,400
10	600	4.69	4.24	3,412	126	3,286
15	900	3.64	3.29	3,636	189	3,447
20	1,200	3.16	2.86	4,019	252	3,767
25	1,500	2.69	2.43	4,143	315	3,828
30	1,800	2.21	2.00	4,007	378	3,629
35	2,100	2.06	1.87	4,298	441	3,857
40	2,400	1.91	1.73	4,508	504	4,004
45	2,700	1.77	1.60	4,638	567	4,071
50	3,000	1.62	1.46	4,687	630	4,057
55	3,300	1.47	1.33	4,656	693	3,963
60	3,600	1.32	1.19	4,544	756	3,788
65	3,900	1.27	1.15	4,716	819	3,897
70	4,200	1.22	1.10	4,862	882	3,980
75	4,500	1.17	1.06	4,980	945	4,035
80	4,800	1.12	1.01	5,071	1008	4,063
85	5,100	1.07	0.97	5,135	1071	4,064
90	5,400	1.02	0.92	5,172	1134	4,038
95	5,700	0.97	0.88	5,182	1197	3,985
100	6,000	0.92	0.83	5,165	1260	3,905
105	6,300	0.87	0.79	5,120	1323	3,797
110	6,600	0.82	0.74	5,048	1386	3,662
115	6,900	0.77	0.70	4,950	1449	3,501
120	7,200	0.72	0.65	4,824	1512	3,312
180	10,800	0.50	0.45	4,969	2268	2,701
360	21,600	0.27	0.25	5,347	4536	811
720	43,200	0.15	0.14	5,970	9072	0
1440	86,400	0.09	0.08	6,739	18144	0

PROJECT:	**KN 24394 US20, Arco to Idaho Falls**				[Linked Data]
BASIN:	2-6 L	Sta 6158-6138			[User Input Data]
DESIGNER:	**BCC, DEA**	**REPORTS TO:**	**SW-6138-L**		[Calculated Data]
DATE:	**9/29/2025**				

Bio-Infiltration Swales

Lowpoint Swale (Priority 1):

Width (feet):	0
Length (feet):	0
Sideslope 1 (H:V):	0
Sideslope 2 (H:V):	0
Max Depth (feet):	0
Max Volume When Full (CF):	0
LP Swale Infiltration Area (SF):	0

Road Slope Swale (Priority 2):	**Roadside Slope A**	**Roadside Slope B**
Base Width (feet):	2	0
Sideslope 1: (_H:1V)	2	0
Sideslope 2: (_H:V)	2	0
Longitudinal Slope (ft/ft):	0.0074	0.0000

Determination of Max Usable Swale Length Due to Slope:

Max Water Depth At Downstream End (feet):	*1.5*	*0.0*
Swale Volume (CF):	*608*	*0*
Length (feet):	*203*	*0*

Determination of Length of Bermed Swales:

Swale Length (feet):	200	0
Storage Depth at U/S End (feet):	0.02	0.00
Swale Volume (CF):	608	0
Infiltration Area Per Bermed Swale (SF):	1008	0
Number of Bermed Swales:	9	0
Total Swale Infiltration Area (SF):	9072	0
Total Swale Volume (CF):	5472	0
Available Length 1 (feet):	1950	0
Proposed Length 2 (feet):	1800	0
Difference (feet):	150	0

OK! (Design> Req'd

No Good (Design< Storage)

Total Design Storage (CF):	**5,472**
Total Infiltration Area (SF):	9,072
Swale Infiltration Rate (cfs):	0.210
Total Infiltration Rate (cfs):	0.210
Total Time to Drain (Hrs):	5.38

Required Treatment Volume:

Basin Imp. Area x 0.5 inches /12 (CF): 1,051 OK! (Design> Req'd)

Required Storage Volume:

Maximum Storage From Rational Column #7 (CF): 4,071 OK! (Design> Req'd)

Target Time to Drain:

From Design Requirements (Hrs): 72 OK! (Design<Req'd)

PROJECT:	**KN 24394 US20, Arco to Idaho Falls**				**[Linked Data]**
BASIN:	2-6 L	Sta 6172-6158			**[User Input Data]**
DESIGNER:	**BCC, DEA**	**REPORTS TO:**	**SW-6138-L**		**[Calculated Data]**
DATE:	**9/29/2025**				

Basin Data

	SF	Acre	C
Impervious Area	18,108	0.416	0.9
Pervious Area	60,007	1.378	0.2
Total Area	78,115	1.793	

Composite "C"	0.36	
Area * "C"	0.650	

			Rational Method Peak Flows (Q=C*I*A)		
Time of Concentration:	10.00	min			
25-Year Intensity	3.61	in/hr	25-year Peak	2.36	cfs
50-Year Intensity	4.16	in/hr	50-year Peak	2.73	cfs
100-year Intensity:	4.69	in/hr	100-year Peak	3.07	cfs

Selected Design Storm:	100-Year
Design Infiltration Rate (in/hr):	1.00

PROJECT:	**KN 24394 US20, Arco to Idaho Falls**			
BASIN:	2-6 L	Sta 6172-6158		
DESIGNER:	**BCC, DEA**	**REPORTS TO:**	**SW-6138-L**	
DATE:	**9/29/2025**			

[Linked Data]
[User Input Data]
[Calculated Data]

MODIFIED RATIONAL METHOD (BOWSTRING) FOR REQUIRED DETENTION STORAGE

#1 Time Inc. (min.)	#2 Time Inc. (sec.) (#1*60)	#3 Intensity (in./hr.)	#4 Q dev. (cfs) (A*C*#3)	#5 V in (cu. ft.)	#6 V out (cu. ft.) (Outf.*#2)	#7 Req. Storage (cu. ft.) (#5-#6)
10.00	600.00	4.69	3.07	2,470	95	2,375
5	300	6.77	4.40	1,768	48	1,720
10	600	4.69	3.05	2,450	95	2,354
15	900	3.64	2.36	2,611	143	2,467
20	1,200	3.16	2.06	2,885	191	2,694
25	1,500	2.69	1.75	2,974	239	2,735
30	1,800	2.21	1.44	2,877	286	2,591
35	2,100	2.06	1.34	3,086	334	2,752
40	2,400	1.91	1.24	3,237	382	2,855
45	2,700	1.77	1.15	3,330	430	2,900
50	3,000	1.62	1.05	3,365	477	2,888
55	3,300	1.47	0.95	3,342	525	2,817
60	3,600	1.32	0.86	3,262	573	2,689
65	3,900	1.27	0.83	3,386	621	2,765
70	4,200	1.22	0.79	3,490	668	2,822
75	4,500	1.17	0.76	3,575	716	2,859
80	4,800	1.12	0.73	3,641	764	2,877
85	5,100	1.07	0.70	3,687	812	2,875
90	5,400	1.02	0.66	3,713	859	2,854
95	5,700	0.97	0.63	3,720	907	2,813
100	6,000	0.92	0.60	3,708	955	2,753
105	6,300	0.87	0.57	3,676	1003	2,673
110	6,600	0.82	0.53	3,625	1050	2,574
115	6,900	0.77	0.50	3,554	1098	2,456
120	7,200	0.72	0.47	3,463	1146	2,317
180	10,800	0.50	0.32	3,567	1719	1,848
360	21,600	0.27	0.18	3,839	3438	401
720	43,200	0.15	0.10	4,286	6875	0
1440	86,400	0.09	0.06	4,839	13750	0

PROJECT:	**KN 24394 US20, Arco to Idaho Falls**				[Linked Data]
BASIN:	2-6 L	Sta 6172-6158			[User Input Data]
DESIGNER:	**BCC, DEA**	**REPORTS TO:**	**SW-6138-L**		[Calculated Data]
DATE:	**9/29/2025**				

Bio-Infiltration Swales

Lowpoint Swale (Priority 1):

Width (feet):	0
Length (feet):	0
Sideslope 1 (H:V):	0
Sideslope 2 (H:V):	0
Max Depth (feet):	0
Max Volume When Full (CF):	0
LP Swale Infiltration Area (SF):	0

Road Slope Swale (Priority 2):	**Roadside Slope A**	**Roadside Slope B**
Base Width (feet):	2	0
Sideslope 1: (_H:1V)	2	0
Sideslope 2: (_H:V)	2	0
Longitudinal Slope (ft/ft):	0.0120	0.0000
Determination of Max Usable Swale Length Due to Slope:		
Max Water Depth At Downstream End (feet):	*1.5*	*0.0*
Swale Volume (CF):	*375*	*0*
Length (feet):	*125*	*0*
Determination of Length of Bermed Swales:		
Swale Length (feet):	125	0
Storage Depth at U/S End (feet):	0.00	0.00
Swale Volume (CF):	375	0
Infiltration Area Per Bermed Swale (SF):	625	0
Number of Bermed Swales:	11	0
Total Swale Infiltration Area (SF):	6875	0
Total Swale Volume (CF):	4125	0
Available Length 1 (feet):	1400	0
Proposed Length 2 (feet):	1375	0
Difference (feet):	25	0

OK! (Design> Req'd

No Good (Design< Storage)

Total Design Storage (CF):	**4,125**
Total Infiltration Area (SF):	6,875
Swale Infiltration Rate (cfs):	0.159
Total Infiltration Rate (cfs):	0.159
Total Time to Drain (Hrs):	5.06

Required Treatment Volume:

Basin Imp. Area x 0.5 inches /12 (CF): 754 — OK! (Design> Req'd)

Required Storage Volume:

Maximum Storage From Rational Column #7 (CF): 2,900 — OK! (Design> Req'd)

Target Time to Drain:

From Design Requirements (Hrs): 72 — OK! (Design<Req'd)

PROJECT:	**KN 24394 US20, Arco to Idaho Falls**				**[Linked Data]**
BASIN:	2-6 L	Sta 6184-6172			**[User Input Data]**
DESIGNER:	**BCC, DEA**	**REPORTS TO:**	**SW-6138-L**		**[Calculated Data]**
DATE:	**9/29/2025**				

Basin Data

	SF	Acre	C
Impervious Area	15,521	0.356	0.9
Pervious Area	51,435	1.181	0.2
Total Area	66,956	1.537	

Composite "C"	0.36
Area * "C"	0.557

			Rational Method Peak Flows (Q=C*I*A)		
Time of Concentration:	10.00	min			
25-Year Intensity	3.61	in/hr	25-year Peak	2.03	cfs
50-Year Intensity	4.16	in/hr	50-year Peak	2.34	cfs
100-year Intensity:	4.69	in/hr	100-year Peak	2.63	cfs

Selected Design Storm: 100-Year

Design Infiltration Rate (in/hr): 1.00

PROJECT:	**KN 24394 US20, Arco to Idaho Falls**			
BASIN:	2-6 L	Sta 6184-6172		
DESIGNER:	**BCC, DEA**	**REPORTS TO:**	**SW-6138-L**	
DATE:	**9/29/2025**			

[Linked Data]
[User Input Data]
[Calculated Data]

MODIFIED RATIONAL METHOD (BOWSTRING) FOR REQUIRED DETENTION STORAGE

#1 Time Inc. (min.)	#2 Time Inc. (sec.) (#1*60)	#3 Intensity (in./hr.)	#4 Q dev. (cfs) (A*C*#3)	#5 V in (cu. ft.)	#6 V out (cu. ft.) (Outf.*#2)	#7 Req. Storage (cu. ft.) (#5-#6)
10.00	600.00	4.69	2.63	2,117	68	2,049
5	300	6.77	3.77	1,515	34	1,482
10	600	4.69	2.61	2,100	68	2,032
15	900	3.64	2.03	2,238	102	2,136
20	1,200	3.16	1.76	2,473	135	2,338
25	1,500	2.69	1.50	2,549	169	2,380
30	1,800	2.21	1.23	2,466	203	2,263
35	2,100	2.06	1.15	2,645	237	2,408
40	2,400	1.91	1.07	2,774	271	2,504
45	2,700	1.77	0.98	2,854	305	2,549
50	3,000	1.62	0.90	2,884	339	2,546
55	3,300	1.47	0.82	2,865	372	2,493
60	3,600	1.32	0.74	2,796	406	2,390
65	3,900	1.27	0.71	2,902	440	2,462
70	4,200	1.22	0.68	2,992	474	2,518
75	4,500	1.17	0.65	3,065	508	2,557
80	4,800	1.12	0.62	3,121	542	2,579
85	5,100	1.07	0.60	3,160	576	2,585
90	5,400	1.02	0.57	3,183	609	2,574
95	5,700	0.97	0.54	3,189	643	2,546
100	6,000	0.92	0.51	3,178	677	2,501
105	6,300	0.87	0.48	3,151	711	2,440
110	6,600	0.82	0.46	3,107	745	2,362
115	6,900	0.77	0.43	3,046	779	2,267
120	7,200	0.72	0.40	2,968	813	2,156
180	10,800	0.50	0.28	3,058	1219	1,839
360	21,600	0.27	0.15	3,290	2438	853
720	43,200	0.15	0.08	3,674	4875	0
1440	86,400	0.09	0.05	4,147	9750	0

PROJECT:	**KN 24394 US20, Arco to Idaho Falls**				[Linked Data]
BASIN:	2-6 L	Sta 6184-6172			[User Input Data]
DESIGNER:	**BCC, DEA**	**REPORTS TO:**	**SW-6138-L**		[Calculated Data]
DATE:	**9/29/2025**				

Bio-Infiltration Swales

Lowpoint Swale (Priority 1):

Width (feet):	0
Length (feet):	0
Sideslope 1 (H:V):	0
Sideslope 2 (H:V):	0
Max Depth (feet):	0
Max Volume When Full (CF):	0
LP Swale Infiltration Area (SF):	0

Road Slope Swale (Priority 2):	**Roadside Slope A**	**Roadside Slope B**
Base Width (feet):	2	0
Sideslope 1: (_H:1V)	2	0
Sideslope 2: (_H:V)	2	0
Longitudinal Slope (ft/ft):	0.0010	0.0000
Determination of Max Usable Swale Length Due to Slope:		
Max Water Depth At Downstream End (feet):	*1.5*	*0.0*
Swale Volume (CF):	*4500*	*0*
Length (feet):	*1500*	*0*
Determination of Length of Bermed Swales:		
Swale Length (feet):	750	0
Storage Depth at U/S End (feet):	0.75	0.00
Swale Volume (CF):	3656	0
Infiltration Area Per Bermed Swale (SF):	4875	0
Number of Bermed Swales:	1	0
Total Swale Infiltration Area (SF):	4875	0
Total Swale Volume (CF):	3656	0
Available Length 1 (feet):	1200	0
Proposed Length 2 (feet):	750	0
Difference (feet):	450 OK! (Design> Req'd	0 No Good (Design< Storage)

Total Design Storage (CF):	**3,656**
Total Infiltration Area (SF):	4,875
Swale Infiltration Rate (cfs):	0.113
Total Infiltration Rate (cfs):	0.113
Total Time to Drain (Hrs):	6.36

Required Treatment Volume:		
Basin Imp. Area x 0.5 inches /12 (CF)	647	OK! (Design> Req'd)
Required Storage Volume:		
Maximum Storage From Rational Column #7 (CF):	2,585	OK! (Design> Req'd)
Target Time to Drain:		
From Design Requirements (Hrs):	72	OK! (Design<Req'd)

PROJECT:	**KN 24394 US20, Arco to Idaho Falls**				**[Linked Data]**
BASIN:	2-6 L	Sta 6215-6184			**[User Input Data]**
DESIGNER:	**BCC, DEA**	**REPORTS TO:**	**SW-6138-L**		**[Calculated Data]**
DATE:	**9/29/2025**				

Basin Data

	SF	Acre	C
Impervious Area	40,096	0.920	0.9
Pervious Area	132,873	3.050	0.2
Total Area	172,969	3.971	

Composite "C"	0.36	
Area * "C"	1.438	

			Rational Method Peak Flows (Q=C*I*A)		
Time of Concentration:	10.00	min			
25-Year Intensity	3.61	in/hr	25-year Peak	5.24	cfs
50-Year Intensity	4.16	in/hr	50-year Peak	6.03	cfs
100-year Intensity:	4.69	in/hr	100-year Peak	6.80	cfs

Selected Design Storm:	100-Year
Design Infiltration Rate (in/hr):	1.00

PROJECT:	**KN 24394 US20, Arco to Idaho Falls**			
BASIN:	2-6 L	Sta 6215-6184		
DESIGNER:	**BCC, DEA**	**REPORTS TO:**	**SW-6138-L**	
DATE:	**9/29/2025**			

[Linked Data]
[User Input Data]
[Calculated Data]

MODIFIED RATIONAL METHOD (BOWSTRING) FOR REQUIRED DETENTION STORAGE

#1 Time Inc. (min.)	#2 Time Inc. (sec.) (#1*60)	#3 Intensity (in./hr.)	#4 Q dev. (cfs) (A*C*#3)	#5 V in (cu. ft.)	#6 V out (cu. ft.) (Outf.*#2)	#7 Req. Storage (cu. ft.) (#5-#6)
10.00	600.00	4.69	6.80	5,469	211	5,259
5	300	6.77	9.74	3,915	105	3,810
10	600	4.69	6.75	5,424	211	5,213
15	900	3.64	5.24	5,781	316	5,464
20	1,200	3.16	4.55	6,389	422	5,967
25	1,500	2.69	3.86	6,586	527	6,058
30	1,800	2.21	3.18	6,371	633	5,738
35	2,100	2.06	2.97	6,833	738	6,095
40	2,400	1.91	2.75	7,167	843	6,324
45	2,700	1.77	2.54	7,373	949	6,424
50	3,000	1.62	2.33	7,451	1054	6,397
55	3,300	1.47	2.11	7,401	1160	6,242
60	3,600	1.32	1.90	7,223	1265	5,958
65	3,900	1.27	1.83	7,498	1370	6,127
70	4,200	1.22	1.75	7,729	1476	6,253
75	4,500	1.17	1.68	7,917	1581	6,336
80	4,800	1.12	1.61	8,062	1687	6,375
85	5,100	1.07	1.54	8,164	1792	6,372
90	5,400	1.02	1.47	8,223	1898	6,325
95	5,700	0.97	1.40	8,238	2003	6,235
100	6,000	0.92	1.32	8,210	2108	6,102
105	6,300	0.87	1.25	8,140	2214	5,926
110	6,600	0.82	1.18	8,026	2319	5,707
115	6,900	0.77	1.11	7,869	2425	5,444
120	7,200	0.72	1.04	7,668	2530	5,138
180	10,800	0.50	0.72	7,899	3795	4,104
360	21,600	0.27	0.39	8,500	7590	910
720	43,200	0.15	0.22	9,490	15180	0
1440	86,400	0.09	0.12	10,714	30360	0

PROJECT:	**KN 24394 US20, Arco to Idaho Falls**				[Linked Data]
BASIN:	2-6 L	Sta 6215-6184			[User Input Data]
DESIGNER:	**BCC, DEA**	**REPORTS TO:**	**SW-6138-L**		[Calculated Data]
DATE:	**9/29/2025**				

Bio-Infiltration Swales

Lowpoint Swale (Priority 1):

Width (feet):	0
Length (feet):	0
Sideslope 1 (H:V):	0
Sideslope 2 (H:V):	0
Max Depth (feet):	0
Max Volume When Full (CF):	0
LP Swale Infiltration Area (SF):	0

Road Slope Swale (Priority 2):	**Roadside Slope A**	**Roadside Slope B**
Base Width (feet):	2	0
Sideslope 1: (_H:1V)	2	0
Sideslope 2: (_H:V)	2	0
Longitudinal Slope (ft/ft):	0.0049	0.0000
Determination of Max Usable Swale Length Due to Slope:		
Max Water Depth At Downstream End (feet):	*1.5*	*0.0*
Swale Volume (CF):	*918*	*0*
Length (feet):	*306*	*0*
Determination of Length of Bermed Swales:		
Swale Length (feet):	300	0
Storage Depth at U/S End (feet):	0.03	0.00
Swale Volume (CF):	918	0
Infiltration Area Per Bermed Swale (SF):	1518	0
Number of Bermed Swales:	10	0
Total Swale Infiltration Area (SF):	15180	0
Total Swale Volume (CF):	9182	0
Available Length 1 (feet):	3100	0
Proposed Length 2 (feet):	3000	0
Difference (feet):	100	0

OK! (Design> Req'd

No Good (Design< Storage)

Total Design Storage (CF):	**9,182**
Total Infiltration Area (SF):	15,180
Swale Infiltration Rate (cfs):	0.351
Total Infiltration Rate (cfs):	0.351
Total Time to Drain (Hrs):	5.08

Required Treatment Volume:

Basin Imp. Area x 0.5 inches /12 (CF): 1,671 **OK! (Design> Req'd)**

Required Storage Volume:

Maximum Storage From Rational Column #7 (CF): 6,424 **OK! (Design> Req'd)**

Target Time to Drain:

From Design Requirements (Hrs): 72 **OK! (Design<Req'd)**

PROJECT:	**KN 24394 US20, Arco to Idaho Falls**				**[Linked Data]**
BASIN:	2-7 L	Sta 6234-6215			**[User Input Data]**
DESIGNER:	**BCC, DEA**	**REPORTS TO:**	**SW-6215-L**		**[Calculated Data]**
DATE:	**9/29/2025**				

Basin Data

	SF	Acre	C
Impervious Area	26,816	0.616	0.9
Pervious Area	87,725	2.014	0.2
Total Area	114,541	2.629	

Composite "C"	0.36
Area * "C"	0.957

			Rational Method Peak Flows (Q=C*I*A)		
Time of Concentration:	10.00	min			
25-Year Intensity	3.61	in/hr	25-year Peak	3.48	cfs
50-Year Intensity	4.16	in/hr	50-year Peak	4.01	cfs
100-year Intensity:	4.69	in/hr	100-year Peak	4.52	cfs

Selected Design Storm:	100-Year
Design Infiltration Rate (in/hr):	1.00

PROJECT:	**KN 24394 US20, Arco to Idaho Falls**			
BASIN:	2-7 L	Sta 6234-6215		
DESIGNER:	**BCC, DEA**	**REPORTS TO:**	**SW-6215-L**	
DATE:	**9/29/2025**			

[Linked Data]
[User Input Data]
[Calculated Data]

MODIFIED RATIONAL METHOD (BOWSTRING) FOR REQUIRED DETENTION STORAGE

#1 Time Inc. (min.)	#2 Time Inc. (sec.) (#1*60)	#3 Intensity (in./hr.)	#4 Q dev. (cfs) (A*C*#3)	#5 V in (cu. ft.)	#6 V out (cu. ft.) (Outf.*#2)	#7 Req. Storage (cu. ft.) (#5-#6)
10.00	600.00	4.69	4.52	3,638	133	3,506
5	300	6.77	6.48	2,604	66	2,538
10	600	4.69	4.49	3,608	133	3,475
15	900	3.64	3.48	3,845	199	3,646
20	1,200	3.16	3.03	4,250	265	3,985
25	1,500	2.69	2.57	4,380	331	4,049
30	1,800	2.21	2.11	4,238	398	3,840
35	2,100	2.06	1.97	4,545	464	4,081
40	2,400	1.91	1.83	4,767	530	4,237
45	2,700	1.77	1.69	4,904	596	4,308
50	3,000	1.62	1.55	4,956	663	4,294
55	3,300	1.47	1.40	4,923	729	4,194
60	3,600	1.32	1.26	4,804	795	4,009
65	3,900	1.27	1.22	4,987	861	4,126
70	4,200	1.22	1.17	5,141	928	4,213
75	4,500	1.17	1.12	5,266	994	4,272
80	4,800	1.12	1.07	5,362	1060	4,302
85	5,100	1.07	1.02	5,430	1126	4,304
90	5,400	1.02	0.98	5,469	1193	4,277
95	5,700	0.97	0.93	5,480	1259	4,221
100	6,000	0.92	0.88	5,461	1325	4,136
105	6,300	0.87	0.83	5,414	1391	4,023
110	6,600	0.82	0.78	5,338	1458	3,881
115	6,900	0.77	0.74	5,234	1524	3,710
120	7,200	0.72	0.69	5,101	1590	3,511
180	10,800	0.50	0.48	5,254	2385	2,869
360	21,600	0.27	0.26	5,654	4770	884
720	43,200	0.15	0.15	6,313	9540	0
1440	86,400	0.09	0.08	7,126	19080	0

PROJECT:	**KN 24394 US20, Arco to Idaho Falls**				[Linked Data]
BASIN:	2-7 L	Sta 6234-6215			[User Input Data]
DESIGNER:	**BCC, DEA**	**REPORTS TO:**	**SW-6215-L**		[Calculated Data]
DATE:	**9/29/2025**				

Bio-Infiltration Swales

Lowpoint Swale (Priority 1):

Width (feet):	0
Length (feet):	0
Sideslope 1 (H:V):	0
Sideslope 2 (H:V):	0
Max Depth (feet):	0
Max Volume When Full (CF):	0
LP Swale Infiltration Area (SF):	0

Road Slope Swale (Priority 2):	**Roadside Slope A**	**Roadside Slope B**
Base Width (feet):	2	0
Sideslope 1: (_H:1V)	2	0
Sideslope 2: (_H:V)	2	0
Longitudinal Slope (ft/ft):	0.0015	0.0000

Determination of Max Usable Swale Length Due to Slope:

Max Water Depth At Downstream End (feet):	*1.5*	*0.0*
Swale Volume (CF):	*3000*	*0*
Length (feet):	*1000*	*0*

Determination of Length of Bermed Swales:

Swale Length (feet):	900	0
Storage Depth at U/S End (feet):	0.15	0.00
Swale Volume (CF):	2984	0
Infiltration Area Per Bermed Swale (SF):	4770	0
Number of Bermed Swales:	2	0
Total Swale Infiltration Area (SF):	9540	0
Total Swale Volume (CF):	5967	0
Available Length 1 (feet):	1900	0
Proposed Length 2 (feet):	1800	0
Difference (feet):	100	0

OK! (Design> Req'd

No Good (Design< Storage)

Total Design Storage (CF):	**5,967**
Total Infiltration Area (SF):	9,540
Swale Infiltration Rate (cfs):	0.221
Total Infiltration Rate (cfs):	0.221
Total Time to Drain (Hrs):	5.42

Required Treatment Volume:

Basin Imp. Area x 0.5 inches /12 (CF): 1,117 OK! (Design> Req'd)

Required Storage Volume:

Maximum Storage From Rational Column #7 (CF): 4,308 OK! (Design> Req'd)

Target Time to Drain:

From Design Requirements (Hrs): 72 OK! (Design<Req'd)

PROJECT:	**KN 24394 US20, Arco to Idaho Falls**				**[Linked Data]**
BASIN:	2-7 L	Sta 6262-6234			**[User Input Data]**
DESIGNER:	**BCC, DEA**	**REPORTS TO:**	**SW-6215-L**		**[Calculated Data]**
DATE:	**9/29/2025**				

Basin Data

	SF	Acre	C
Impervious Area	39,518	0.907	0.9
Pervious Area	129,279	2.968	0.2
Total Area	168,797	3.875	

Composite "C"	0.36	
Area * "C"	1.410	

			Rational Method Peak Flows (Q=C*I*A)		
Time of Concentration:	10.00	min			
25-Year Intensity	3.61	in/hr	25-year Peak	5.13	cfs
50-Year Intensity	4.16	in/hr	50-year Peak	5.91	cfs
100-year Intensity:	4.69	in/hr	100-year Peak	6.67	cfs

Selected Design Storm:	100-Year
Design Infiltration Rate (in/hr):	1.00

PROJECT:	**KN 24394 US20, Arco to Idaho Falls**			
BASIN:	2-7 L	Sta 6262-6234		
DESIGNER:	**BCC, DEA**	**REPORTS TO:**	**SW-6215-L**	
DATE:	**9/29/2025**			

[Linked Data]
[User Input Data]
[Calculated Data]

MODIFIED RATIONAL METHOD (BOWSTRING) FOR REQUIRED DETENTION STORAGE

#1 Time Inc. (min.)	#2 Time Inc. (sec.) (#1*60)	#3 Intensity (in./hr.)	#4 Q dev. (cfs) (A*C*#3)	#5 V in (cu. ft.)	#6 V out (cu. ft.) (Outf.*#2)	#7 Req. Storage (cu. ft.) (#5-#6)
10.00	600.00	4.69	6.67	5,361	179	5,182
5	300	6.77	9.55	3,838	90	3,748
10	600	4.69	6.61	5,317	179	5,138
15	900	3.64	5.13	5,666	269	5,398
20	1,200	3.16	4.46	6,262	358	5,904
25	1,500	2.69	3.79	6,455	448	6,007
30	1,800	2.21	3.12	6,245	538	5,707
35	2,100	2.06	2.91	6,698	627	6,071
40	2,400	1.91	2.70	7,025	717	6,308
45	2,700	1.77	2.49	7,227	807	6,421
50	3,000	1.62	2.28	7,304	896	6,408
55	3,300	1.47	2.07	7,255	986	6,269
60	3,600	1.32	1.86	7,080	1075	6,005
65	3,900	1.27	1.79	7,349	1165	6,184
70	4,200	1.22	1.72	7,576	1255	6,321
75	4,500	1.17	1.65	7,760	1344	6,416
80	4,800	1.12	1.58	7,903	1434	6,469
85	5,100	1.07	1.51	8,002	1523	6,479
90	5,400	1.02	1.44	8,060	1613	6,447
95	5,700	0.97	1.37	8,075	1703	6,373
100	6,000	0.92	1.30	8,048	1792	6,256
105	6,300	0.87	1.23	7,979	1882	6,097
110	6,600	0.82	1.16	7,867	1972	5,896
115	6,900	0.77	1.09	7,713	2061	5,652
120	7,200	0.72	1.02	7,517	2151	5,366
180	10,800	0.50	0.70	7,743	3226	4,516
360	21,600	0.27	0.38	8,332	6452	1,880
720	43,200	0.15	0.21	9,303	12905	0
1440	86,400	0.09	0.12	10,502	25809	0

PROJECT:	**KN 24394 US20, Arco to Idaho Falls**				[Linked Data]
BASIN:	2-7 L	Sta 6262-6234			[User Input Data]
DESIGNER:	**BCC, DEA**	**REPORTS TO:**	**SW-6215-L**		[Calculated Data]
DATE:	**9/29/2025**				

Bio-Infiltration Swales

Lowpoint Swale (Priority 1):

Width (feet):	0
Length (feet):	0
Sideslope 1 (H:V):	0
Sideslope 2 (H:V):	0
Max Depth (feet):	0
Max Volume When Full (CF):	0
LP Swale Infiltration Area (SF):	0

Road Slope Swale (Priority 2):	**Roadside Slope A**	**Roadside Slope B**
Base Width (feet):	2	2
Sideslope 1: (_H:1V)	2	2
Sideslope 2: (_H:V)	2	2
Longitudinal Slope (ft/ft):	0.0063	0.0071
Determination of Max Usable Swale Length Due to Slope:		
Max Water Depth At Downstream End (feet):	*1.5*	*1.5*
Swale Volume (CF):	*714*	*634*
Length (feet):	*238*	*211*
Determination of Length of Bermed Swales:		
Swale Length (feet):	225	200
Storage Depth at U/S End (feet):	0.08	0.08
Swale Volume (CF):	713	633
Infiltration Area Per Bermed Swale (SF):	1162	1032
Number of Bermed Swales:	4	8
Total Swale Infiltration Area (SF):	4649	8256
Total Swale Volume (CF):	2853	5063
Available Length 1 (feet):	1000	1800
Proposed Length 2 (feet):	900	1600
Difference (feet):	100 **OK! (Design> Req'd**	200 **OK! (Design> Req'd)**

Total Design Storage (CF):	**7,915**	
Total Infiltration Area (SF):	12,905	
Swale Infiltration Rate (cfs):	0.299	
Total Infiltration Rate (cfs):	0.299	
Total Time to Drain (Hrs):	6.02	
Required Treatment Volume:		
Basin Imp. Area x 0.5 inches /12 (CF)	1,647	**OK! (Design> Req'd)**
Required Storage Volume:		
Maximum Storage From Rational Column #7 (CF):	6,479	**OK! (Design> Req'd)**
Target Time to Drain:		
From Design Requirements (Hrs):	72	**OK! (Design<Req'd)**

PROJECT:	**KN 24394 US20, Arco to Idaho Falls**				**[Linked Data]**
BASIN:	2-8 L				**[User Input Data]**
DESIGNER:	**BCC, DEA**	**REPORTS TO:**	**SW-6262-L**		**[Calculated Data]**
DATE:	**9/29/2025**				

Basin Data

	SF	Acre	C
Impervious Area	53,763	1.234	0.9
Pervious Area	140,949	3.236	0.2
Total Area	194,713	4.470	

Composite "C"	0.39	
Area * "C"	1.758	

Time of Concentration:	10.00	min
25-Year Intensity	3.61	in/hr
50-Year Intensity	4.16	in/hr
100-year Intensity:	4.69	in/hr

Rational Method Peak Flows (Q=C*I*A)

25-year Peak	6.40	cfs
50-year Peak	7.37	cfs
100-year Peak	8.31	cfs

Selected Design Storm:	100-Year
Design Infiltration Rate (in/hr):	1.00

TIME OF CONCENTRATION (Minutes)

Tc (A) Channel or Pipe:

Shape (A) =	Triangular	
L (A) =	225	ft
n(A) =	0.03	Grass Channel
S(A) =	0.0039	ft/ft
R(A) =	0.47	ft
V(A) =	1.89	ft/s
Tc (A) =	1.99	min

Tc (B) Channel or Pipe:

Shape (B) =	Circular	
L (B) =	0	
n(B) =	0.013	Concrete
S(B) =	0.01	
R(B) =	0.50	
V(B) =	7.22	
Tc (B) =	0.00	

Tc (C) Shallow/Conc. Flow:

L (C) =	20	
S(C) =	16.70	%
k =	0.213	Short Grass
V (C) =	2.86	
Tc (C) =	0.12	

Tc (D) Sheet Flow:

L (D) =	22	
n(D) =	0.013	Asphalt
S(D) =	0.02	
Tc (D) Estimate =	0.66	<-- Change
Tc Esti. Total =	5.00	min. 5 mins
Resulting I (in/hr) =	6.77	
Tc (D) =	0.66	
		Goal Seek to 0
Tc(tot.) =	10.00	0.00
Intensity (in/hr)=	4.69	

PROJECT:	**KN 24394 US20, Arco to Idaho Falls**			
BASIN:	2-8 L			
DESIGNER:	**BCC, DEA**	**REPORTS TO:**	**SW-6262-L**	
DATE:	**9/29/2025**			

[Linked Data]
[User Input Data]
[Calculated Data]

MODIFIED RATIONAL METHOD (BOWSTRING) FOR REQUIRED DETENTION STORAGE

#1 Time Inc. (min.)	#2 Time Inc. (sec.) (#1*60)	#3 Intensity (in./hr.)	#4 Q dev. (cfs) (A*C*#3)	#5 V in (cu. ft.)	#6 V out (cu. ft.) (Outf.*#2)	#7 Req. Storage (cu. ft.) (#5-#6)
10.00	600.00	4.69	8.31	6,684	266	6,418
5	300	6.77	11.90	4,784	133	4,652
10	600	4.69	8.24	6,629	266	6,363
15	900	3.64	6.40	7,064	398	6,666
20	1,200	3.16	5.56	7,808	531	7,276
25	1,500	2.69	4.72	8,048	664	7,384
30	1,800	2.21	3.89	7,786	797	6,989
35	2,100	2.06	3.62	8,350	930	7,421
40	2,400	1.91	3.36	8,759	1062	7,696
45	2,700	1.77	3.10	9,011	1195	7,815
50	3,000	1.62	2.84	9,106	1328	7,778
55	3,300	1.47	2.58	9,045	1461	7,584
60	3,600	1.32	2.32	8,827	1594	7,234
65	3,900	1.27	2.23	9,163	1726	7,436
70	4,200	1.22	2.14	9,445	1859	7,586
75	4,500	1.17	2.06	9,675	1992	7,683
80	4,800	1.12	1.97	9,852	2125	7,728
85	5,100	1.07	1.88	9,977	2258	7,719
90	5,400	1.02	1.79	10,049	2391	7,658
95	5,700	0.97	1.71	10,068	2523	7,544
100	6,000	0.92	1.62	10,034	2656	7,378
105	6,300	0.87	1.53	9,947	2789	7,158
110	6,600	0.82	1.44	9,808	2922	6,886
115	6,900	0.77	1.35	9,616	3055	6,562
120	7,200	0.72	1.27	9,371	3187	6,184
180	10,800	0.50	0.88	9,653	4781	4,872
360	21,600	0.27	0.48	10,388	9562	826
720	43,200	0.15	0.27	11,598	19124	0
1440	86,400	0.09	0.15	13,093	38248	0

PROJECT:	**KN 24394 US20, Arco to Idaho Falls**				[Linked Data]
BASIN:	2-8 L				[User Input Data]
DESIGNER:	**BCC, DEA**	**REPORTS TO:**	**SW-6262-L**		[Calculated Data]
DATE:	**9/29/2025**				

Bio-Infiltration Swales

Lowpoint Swale (Priority 1):

Width (feet):	0
Length (feet):	0
Sideslope 1 (H:V):	0
Sideslope 2 (H:V):	0
Max Depth (feet):	0
Max Volume When Full (CF):	0
LP Swale Infiltration Area (SF):	0

Road Slope Swale (Priority 2):	**Roadside Slope A**	**Roadside Slope B**
Base Width (feet):	2	2
Sideslope 1: (_H:1V)	2	2
Sideslope 2: (_H:V)	4	4
Longitudinal Slope (ft/ft):	0.0032	0.0013
Determination of Max Usable Swale Length Due to Slope:		
Max Water Depth At Downstream End (feet):	*1.5*	*1.5*
Swale Volume (CF):	*1758*	*4327*
Length (feet):	*469*	*1154*
Determination of Length of Bermed Swales:		
Swale Length (feet):	450	1000
Storage Depth at U/S End (feet):	0.06	0.20
Swale Volume (CF):	1757	4290
Infiltration Area Per Bermed Swale (SF):	3006	7100
Number of Bermed Swales:	4	1
Total Swale Infiltration Area (SF):	12024	7100
Total Swale Volume (CF):	7026	4290
Available Length 1 (feet):	1801	1074
Proposed Length 2 (feet):	1800	1000
Difference (feet):	1 **OK! (Design> Req'd**	74 **OK! (Design> Req'd)**

Total Design Storage (CF):	**11,316**
Total Infiltration Area (SF):	19,124
Swale Infiltration Rate (cfs):	0.443
Total Infiltration Rate (cfs):	0.443
Total Time to Drain (Hrs):	4.90
Required Treatment Volume:	
Basin Imp. Area x 0.5 inches /12 (CF)	2,240 **OK! (Design> Req'd)**
Required Storage Volume:	
Maximum Storage From Rational Column #7 (CF):	7,815 **OK! (Design> Req'd)**
Target Time to Drain:	
From Design Requirements (Hrs):	72 **OK! (Design<Req'd)**

PROJECT:	**KN 24394 US20, Arco to Idaho Falls**				**[Linked Data]**
BASIN:	2-9 L	Sta 6291-6344			**[User Input Data]**
DESIGNER:	**BCC, DEA**	**REPORTS TO:**	**SW-6290-L**		**[Calculated Data]**
DATE:	**9/29/2025**				

Basin Data

	SF	Acre	C
Impervious Area	116,228	2.668	0.9
Pervious Area	260,139	5.972	0.2
Total Area	376,367	8.640	

Composite "C"	0.42	
Area * "C"	3.596	

Time of Concentration:	10.00	min	**Rational Method Peak Flows (Q=C*I*A)**		
25-Year Intensity	3.61	in/hr	25-year Peak	13.09	cfs
50-Year Intensity	4.16	in/hr	50-year Peak	15.08	cfs
100-year Intensity:	4.69	in/hr	100-year Peak	17.00	cfs

Selected Design Storm: 100-Year

Design Infiltration Rate (in/hr): 1.00

PROJECT:	**KN 24394 US20, Arco to Idaho Falls**				**[Linked Data]**
BASIN:	2-9 L	Sta 6291-6344			**[User Input Data]**
DESIGNER:	**BCC, DEA**	**REPORTS TO:**	**SW-6290-L**		**[Calculated Data]**
DATE:	**9/29/2025**				

MODIFIED RATIONAL METHOD (BOWSTRING) FOR REQUIRED DETENTION STORAGE

#1 Time Inc. (min.)	#2 Time Inc. (sec.) (#1*60)	#3 Intensity (in./hr.)	#4 Q dev. (cfs) (A*C*#3)	#5 V in (cu. ft.)	#6 V out (cu. ft.) (Outf.*#2)	#7 Req. Storage (cu. ft.) (#5-#6)
10.00	600.00	4.69	17.00	13,672	389	13,282
5	300	6.77	24.34	9,786	195	9,591
10	600	4.69	16.86	13,559	389	13,169
15	900	3.64	13.09	14,450	584	13,866
20	1,200	3.16	11.37	15,970	779	15,191
25	1,500	2.69	9.66	16,462	973	15,488
30	1,800	2.21	7.95	15,925	1168	14,757
35	2,100	2.06	7.41	17,080	1363	15,717
40	2,400	1.91	6.88	17,915	1558	16,358
45	2,700	1.77	6.35	18,430	1752	16,678
50	3,000	1.62	5.81	18,626	1947	16,679
55	3,300	1.47	5.28	18,501	2142	16,359
60	3,600	1.32	4.75	18,055	2336	15,719
65	3,900	1.27	4.57	18,742	2531	16,211
70	4,200	1.22	4.39	19,320	2726	16,594
75	4,500	1.17	4.21	19,790	2920	16,870
80	4,800	1.12	4.03	20,153	3115	17,037
85	5,100	1.07	3.85	20,407	3310	17,097
90	5,400	1.02	3.67	20,554	3504	17,049
95	5,700	0.97	3.49	20,593	3699	16,893
100	6,000	0.92	3.31	20,524	3894	16,630
105	6,300	0.87	3.13	20,347	4089	16,258
110	6,600	0.82	2.95	20,062	4283	15,779
115	6,900	0.77	2.77	19,669	4478	15,191
120	7,200	0.72	2.59	19,169	4673	14,496
180	10,800	0.50	1.79	19,744	7009	12,736
360	21,600	0.27	0.97	21,247	14018	7,229
720	43,200	0.15	0.55	23,723	28036	0
1440	86,400	0.09	0.31	26,781	56072	0

PROJECT:	**KN 24394 US20, Arco to Idaho Falls**				[Linked Data]
BASIN:	2-9 L	Sta 6291-6344			[User Input Data]
DESIGNER:	**BCC, DEA**	**REPORTS TO:**	**SW-6290-L**		[Calculated Data]
DATE:	**9/29/2025**				

Bio-Infiltration Swales

Lowpoint Swale (Priority 1):

Width (feet):	0
Length (feet):	0
Sideslope 1 (H:V):	0
Sideslope 2 (H:V):	0
Max Depth (feet):	0
Max Volume When Full (CF):	0
LP Swale Infiltration Area (SF):	0

Road Slope Swale (Priority 2):	**Roadside Slope A**	**Roadside Slope B**
Base Width (feet):	2	2
Sideslope 1: (_H:1V)	2	2
Sideslope 2: (_H:V)	2	2
Longitudinal Slope (ft/ft):	0.0100	0.0159
Determination of Max Usable Swale Length Due to Slope:		
Max Water Depth At Downstream End (feet):	*1.5*	*1.5*
Swale Volume (CF):	*450*	*283*
Length (feet):	*150*	*94*
Determination of Length of Bermed Swales:		
Swale Length (feet):	125	90
Storage Depth at U/S End (feet):	0.25	0.07
Swale Volume (CF):	443	283
Infiltration Area Per Bermed Swale (SF):	688	462
Number of Bermed Swales:	28	19
Total Swale Infiltration Area (SF):	19250	8786
Total Swale Volume (CF):	12396	5371
Available Length 1 (feet):	3550	1750
Proposed Length 2 (feet):	3500	1710
Difference (feet):	50 **OK! (Design> Req'd**	40 **OK! (Design> Req'd)**

Total Design Storage (CF):	**17,767**	
Total Infiltration Area (SF):	28,036	
Swale Infiltration Rate (cfs):	0.649	
Total Infiltration Rate (cfs):	0.649	
Total Time to Drain (Hrs):	7.32	
Required Treatment Volume:		
Basin Imp. Area x 0.5 inches /12 (CF)	4,843	**OK! (Design> Req'd)**
Required Storage Volume:		
Maximum Storage From Rational Column #7 (CF):	17,097	**OK! (Design> Req'd)**
Target Time to Drain:		
From Design Requirements (Hrs):	72	**OK! (Design<Req'd)**

PROJECT:	**KN 24394 US20, Arco to Idaho Falls**				**[Linked Data]**
BASIN:	2-9 L	Sta 6344-6368			**[User Input Data]**
DESIGNER:	**BCC, DEA**	**REPORTS TO:**	**SW-6290-L**		**[Calculated Data]**
DATE:	**9/29/2025**				

Basin Data

	SF	Acre	C
Impervious Area	52,631	1.208	0.9
Pervious Area	117,799	2.704	0.2
Total Area	170,430	3.913	

Composite "C"	0.42	
Area * "C"	1.628	

			Rational Method Peak Flows (Q=C*I*A)		
Time of Concentration:	10.00	min			
25-Year Intensity	3.61	in/hr	25-year Peak	5.93	cfs
50-Year Intensity	4.16	in/hr	50-year Peak	6.83	cfs
100-year Intensity:	4.69	in/hr	100-year Peak	7.70	cfs

Selected Design Storm:	100-Year
Design Infiltration Rate (in/hr):	1.00

PROJECT:	**KN 24394 US20, Arco to Idaho Falls**			
BASIN:	2-9 L	Sta 6344-6368		
DESIGNER:	**BCC, DEA**	**REPORTS TO:**	**SW-6290-L**	
DATE:	**9/29/2025**			

[Linked Data]
[User Input Data]
[Calculated Data]

MODIFIED RATIONAL METHOD (BOWSTRING) FOR REQUIRED DETENTION STORAGE

#1 Time Inc. (min.)	#2 Time Inc. (sec.) (#1*60)	#3 Intensity (in./hr.)	#4 Q dev. (cfs) (A*C*#3)	#5 V in (cu. ft.)	#6 V out (cu. ft.) (Outf.*#2)	#7 Req. Storage (cu. ft.) (#5-#6)
10.00	600.00	4.69	7.70	6,191	173	6,018
5	300	6.77	11.02	4,431	86	4,345
10	600	4.69	7.64	6,140	173	5,967
15	900	3.64	5.93	6,543	259	6,284
20	1,200	3.16	5.15	7,232	345	6,886
25	1,500	2.69	4.37	7,454	432	7,023
30	1,800	2.21	3.60	7,211	518	6,693
35	2,100	2.06	3.36	7,734	604	7,130
40	2,400	1.91	3.12	8,113	691	7,422
45	2,700	1.77	2.87	8,346	777	7,569
50	3,000	1.62	2.63	8,434	863	7,571
55	3,300	1.47	2.39	8,378	950	7,428
60	3,600	1.32	2.15	8,176	1036	7,140
65	3,900	1.27	2.07	8,487	1122	7,364
70	4,200	1.22	1.99	8,749	1209	7,540
75	4,500	1.17	1.91	8,962	1295	7,666
80	4,800	1.12	1.82	9,126	1381	7,744
85	5,100	1.07	1.74	9,241	1468	7,773
90	5,400	1.02	1.66	9,307	1554	7,753
95	5,700	0.97	1.58	9,325	1640	7,685
100	6,000	0.92	1.50	9,294	1727	7,567
105	6,300	0.87	1.42	9,214	1813	7,400
110	6,600	0.82	1.34	9,085	1899	7,185
115	6,900	0.77	1.25	8,907	1986	6,921
120	7,200	0.72	1.17	8,680	2072	6,608
180	10,800	0.50	0.81	8,941	3108	5,833
360	21,600	0.27	0.44	9,621	6216	3,405
720	43,200	0.15	0.25	10,742	12433	0
1440	86,400	0.09	0.14	12,127	24866	0

PROJECT:	**KN 24394 US20, Arco to Idaho Falls**				[Linked Data]
BASIN:	2-9 L	Sta 6344-6368			[User Input Data]
DESIGNER:	**BCC, DEA**	**REPORTS TO:**	**SW-6290-L**		[Calculated Data]
DATE:	**9/29/2025**				

Bio-Infiltration Swales

Lowpoint Swale (Priority 1):

Width (feet):	0
Length (feet):	0
Sideslope 1 (H:V):	0
Sideslope 2 (H:V):	0
Max Depth (feet):	0
Max Volume When Full (CF):	0
LP Swale Infiltration Area (SF):	0

Road Slope Swale (Priority 2):	**Roadside Slope A**	**Roadside Slope B**
Base Width (feet):	2	0
Sideslope 1: (_H:1V)	2	0
Sideslope 2: (_H:V)	2	0
Longitudinal Slope (ft/ft):	0.0039	0.0000
Determination of Max Usable Swale Length Due to Slope:		
Max Water Depth At Downstream End (feet):	*1.5*	*0.0*
Swale Volume (CF):	*1154*	*0*
Length (feet):	*385*	*0*
Determination of Length of Bermed Swales:		
Swale Length (feet):	325	0
Storage Depth at U/S End (feet):	0.23	0.00
Swale Volume (CF):	1138	0
Infiltration Area Per Bermed Swale (SF):	1776	0
Number of Bermed Swales:	7	0
Total Swale Infiltration Area (SF):	12433	0
Total Swale Volume (CF):	7965	0
Available Length 1 (feet):	2400	0
Proposed Length 2 (feet):	2275	0
Difference (feet):	125	0

OK! (Design> Req'd

No Good (Design< Storage)

Total Design Storage (CF):	**7,965**
Total Infiltration Area (SF):	12,433
Swale Infiltration Rate (cfs):	0.288
Total Infiltration Rate (cfs):	0.288
Total Time to Drain (Hrs):	7.50

Required Treatment Volume:

Basin Imp. Area x 0.5 inches /12 (CF): 2,193 — OK! (Design> Req'd)

Required Storage Volume:

Maximum Storage From Rational Column #7 (CF): 7,773 — OK! (Design> Req'd)

Target Time to Drain:

From Design Requirements (Hrs): 72 — OK! (Design<Req'd)

PROJECT:	**KN 24394 US20, Arco to Idaho Falls**				**[Linked Data]**
BASIN:	2-10 L	Sta 6367-6392			**[User Input Data]**
DESIGNER:	**BCC, DEA**	**REPORTS TO:**	**SW-6367-L**		**[Calculated Data]**
DATE:	**9/29/2025**				

Basin Data

	SF	Acre	C
Impervious Area	52,395	1.203	0.9
Pervious Area	105,105	2.413	0.2
Total Area	157,500	3.616	

Composite "C"	0.43	
Area * "C"	1.565	

			Rational Method Peak Flows (Q=C*I*A)		
Time of Concentration:	10.00	min			
25-Year Intensity	3.61	in/hr	25-year Peak	5.70	cfs
50-Year Intensity	4.16	in/hr	50-year Peak	6.57	cfs
100-year Intensity:	4.69	in/hr	100-year Peak	7.40	cfs

Selected Design Storm: 100-Year

Design Infiltration Rate (in/hr): 1.00

PROJECT:	**KN 24394 US20, Arco to Idaho Falls**			
BASIN:	2-10 L	Sta 6367-6392		
DESIGNER:	**BCC, DEA**	**REPORTS TO:**	**SW-6367-L**	
DATE:	**9/29/2025**			

[Linked Data]
[User Input Data]
[Calculated Data]

MODIFIED RATIONAL METHOD (BOWSTRING) FOR REQUIRED DETENTION STORAGE

#1 Time Inc. (min.)	#2 Time Inc. (sec.) (#1*60)	#3 Intensity (in./hr.)	#4 Q dev. (cfs) (A*C*#3)	#5 V in (cu. ft.)	#6 V out (cu. ft.) (Outf.*#2)	#7 Req. Storage (cu. ft.) (#5-#6)
10.00	600.00	4.69	7.40	5,951	234	5,717
5	300	6.77	10.60	4,260	117	4,142
10	600	4.69	7.34	5,902	234	5,667
15	900	3.64	5.70	6,290	351	5,938
20	1,200	3.16	4.95	6,951	468	6,483
25	1,500	2.69	4.20	7,165	586	6,580
30	1,800	2.21	3.46	6,932	703	6,229
35	2,100	2.06	3.23	7,434	820	6,615
40	2,400	1.91	2.99	7,798	937	6,861
45	2,700	1.77	2.76	8,022	1054	6,968
50	3,000	1.62	2.53	8,107	1171	6,936
55	3,300	1.47	2.30	8,053	1288	6,764
60	3,600	1.32	2.07	7,859	1405	6,454
65	3,900	1.27	1.99	8,158	1522	6,635
70	4,200	1.22	1.91	8,409	1640	6,770
75	4,500	1.17	1.83	8,614	1757	6,857
80	4,800	1.12	1.75	8,772	1874	6,898
85	5,100	1.07	1.67	8,883	1991	6,892
90	5,400	1.02	1.60	8,946	2108	6,838
95	5,700	0.97	1.52	8,963	2225	6,738
100	6,000	0.92	1.44	8,933	2342	6,591
105	6,300	0.87	1.36	8,856	2459	6,397
110	6,600	0.82	1.28	8,732	2576	6,156
115	6,900	0.77	1.21	8,561	2694	5,868
120	7,200	0.72	1.13	8,343	2811	5,533
180	10,800	0.50	0.78	8,594	4216	4,378
360	21,600	0.27	0.42	9,248	8432	816
720	43,200	0.15	0.24	10,326	16864	0
1440	86,400	0.09	0.13	11,657	33728	0

PROJECT:	**KN 24394 US20, Arco to Idaho Falls**				[Linked Data]
BASIN:	2-10 L	Sta 6367-6392			[User Input Data]
DESIGNER:	**BCC, DEA**	**REPORTS TO:**	**SW-6367-L**		[Calculated Data]
DATE:	**9/29/2025**				

Bio-Infiltration Swales

Lowpoint Swale (Priority 1):

Width (feet):	0
Length (feet):	0
Sideslope 1 (H:V):	0
Sideslope 2 (H:V):	0
Max Depth (feet):	0
Max Volume When Full (CF):	0
LP Swale Infiltration Area (SF):	0

Road Slope Swale (Priority 2):	**Roadside Slope A**	**Roadside Slope B**
Base Width (feet):	2	0
Sideslope 1: (_H:1V)	2	0
Sideslope 2: (_H:V)	4	0
Longitudinal Slope (ft/ft):	0.0175	0.0000

Determination of Max Usable Swale Length Due to Slope:

Max Water Depth At Downstream End (feet):	*1.5*	*0.0*
Swale Volume (CF):	*321*	*0*
Length (feet):	*86*	*0*

Determination of Length of Bermed Swales:

Swale Length (feet):	80	0
Storage Depth at U/S End (feet):	0.10	0.00
Swale Volume (CF):	321	0
Infiltration Area Per Bermed Swale (SF):	544	0
Number of Bermed Swales:	31	0
Total Swale Infiltration Area (SF):	16864	0
Total Swale Volume (CF):	9945	0
Available Length 1 (feet):	2500	0
Proposed Length 2 (feet):	2480	0
Difference (feet):	20	0

OK! (Design> Req'd

No Good (Design< Storage)

Total Design Storage (CF):	**9,945**
Total Infiltration Area (SF):	16,864
Swale Infiltration Rate (cfs):	0.390
Total Infiltration Rate (cfs):	0.390
Total Time to Drain (Hrs):	4.96

Required Treatment Volume:

Basin Imp. Area x 0.5 inches /12 (CF): 2,183 — OK! (Design> Req'd)

Required Storage Volume:

Maximum Storage From Rational Column #7 (CF): 6,968 — OK! (Design> Req'd)

Target Time to Drain:

From Design Requirements (Hrs): 72 — OK! (Design<Req'd)

PROJECT:	**KN 24394 US20, Arco to Idaho Falls**				**[Linked Data]**
BASIN:	2-10 L	Sta 6392-6425			**[User Input Data]**
DESIGNER:	**BCC, DEA**	**REPORTS TO:**	**SW-6367-L**		**[Calculated Data]**
DATE:	**9/29/2025**				

Basin Data

	SF	Acre	C
Impervious Area	69,162	1.588	0.9
Pervious Area	138,739	3.185	0.2
Total Area	207,900	4.773	

Composite "C"	0.43	
Area * "C"	2.066	

			Rational Method Peak Flows (Q=C*I*A)		
Time of Concentration:	10.00	min			
25-Year Intensity	3.61	in/hr	25-year Peak	7.52	cfs
50-Year Intensity	4.16	in/hr	50-year Peak	8.67	cfs
100-year Intensity:	4.69	in/hr	100-year Peak	9.77	cfs

Selected Design Storm:	100-Year
Design Infiltration Rate (in/hr):	1.00

PROJECT:	**KN 24394 US20, Arco to Idaho Falls**				**[Linked Data]**
BASIN:	2-10 L	Sta 6392-6425			**[User Input Data]**
DESIGNER:	**BCC, DEA**	**REPORTS TO:**	**SW-6367-L**		**[Calculated Data]**
DATE:	**9/29/2025**				

MODIFIED RATIONAL METHOD (BOWSTRING) FOR REQUIRED DETENTION STORAGE

#1 Time Inc. (min.)	#2 Time Inc. (sec.) (#1*60)	#3 Intensity (in./hr.)	#4 Q dev. (cfs) (A*C*#3)	#5 V in (cu. ft.)	#6 V out (cu. ft.) (Outf.*#2)	#7 Req. Storage (cu. ft.) (#5-#6)
10.00	600.00	4.69	9.77	7,855	275	7,580
5	300	6.77	13.99	5,623	138	5,485
10	600	4.69	9.69	7,790	275	7,515
15	900	3.64	7.52	8,302	413	7,889
20	1,200	3.16	6.54	9,176	551	8,625
25	1,500	2.69	5.55	9,458	688	8,770
30	1,800	2.21	4.57	9,150	826	8,324
35	2,100	2.06	4.26	9,813	964	8,850
40	2,400	1.91	3.95	10,293	1102	9,192
45	2,700	1.77	3.65	10,589	1239	9,350
50	3,000	1.62	3.34	10,701	1377	9,324
55	3,300	1.47	3.03	10,629	1515	9,115
60	3,600	1.32	2.73	10,374	1652	8,721
65	3,900	1.27	2.62	10,768	1790	8,978
70	4,200	1.22	2.52	11,100	1928	9,172
75	4,500	1.17	2.42	11,370	2065	9,305
80	4,800	1.12	2.31	11,579	2203	9,375
85	5,100	1.07	2.21	11,725	2341	9,384
90	5,400	1.02	2.11	11,809	2479	9,331
95	5,700	0.97	2.00	11,832	2616	9,215
100	6,000	0.92	1.90	11,792	2754	9,038
105	6,300	0.87	1.80	11,690	2892	8,799
110	6,600	0.82	1.69	11,527	3029	8,497
115	6,900	0.77	1.59	11,301	3167	8,134
120	7,200	0.72	1.49	11,013	3305	7,709
180	10,800	0.50	1.03	11,344	4957	6,387
360	21,600	0.27	0.56	12,208	9914	2,293
720	43,200	0.15	0.31	13,630	19828	0
1440	86,400	0.09	0.18	15,387	39657	0

PROJECT:	**KN 24394 US20, Arco to Idaho Falls**			[Linked Data]
BASIN:	2-10 L	Sta 6392-6425		[User Input Data]
DESIGNER:	**BCC, DEA**	**REPORTS TO:**	**SW-6367-L**	[Calculated Data]
DATE:	**9/29/2025**			

Bio-Infiltration Swales

Lowpoint Swale (Priority 1):

Width (feet):	0
Length (feet):	0
Sideslope 1 (H:V):	0
Sideslope 2 (H:V):	0
Max Depth (feet):	0
Max Volume When Full (CF):	0
LP Swale Infiltration Area (SF):	0

Road Slope Swale (Priority 2):	**Roadside Slope A**	**Roadside Slope B**
Base Width (feet):	2	0
Sideslope 1: (_H:1V)	2	0
Sideslope 2: (_H:V)	4	0
Longitudinal Slope (ft/ft):	0.0034	0.0000
Determination of Max Usable Swale Length Due to Slope:		
Max Water Depth At Downstream End (feet):	*1.5*	*0.0*
Swale Volume (CF):	*1654*	*0*
Length (feet):	*441*	*0*
Determination of Length of Bermed Swales:		
Swale Length (feet):	425	0
Storage Depth at U/S End (feet):	0.06	0.00
Swale Volume (CF):	1653	0
Infiltration Area Per Bermed Swale (SF):	2833	0
Number of Bermed Swales:	7	0
Total Swale Infiltration Area (SF):	19828	0
Total Swale Volume (CF):	11574	0
Available Length 1 (feet):	3300	0
Proposed Length 2 (feet):	2975	0
Difference (feet):	325	0

OK! (Design> Req'd

No Good (Design< Storage)

Total Design Storage (CF):	**11,574**
Total Infiltration Area (SF):	19,828
Swale Infiltration Rate (cfs):	0.459
Total Infiltration Rate (cfs):	0.459
Total Time to Drain (Hrs):	5.68

Required Treatment Volume:

Basin Imp. Area x 0.5 inches /12 (CF): 2,882 OK! (Design> Req'd)

Required Storage Volume:

Maximum Storage From Rational Column #7 (CF): 9,384 OK! (Design> Req'd)

Target Time to Drain:

From Design Requirements (Hrs): 72 OK! (Design<Req'd)

PROJECT:	**KN 24394 US20, Arco to Idaho Falls**				**[Linked Data]**
BASIN:	2-1 M				**[User Input Data]**
DESIGNER:	**BCC, DEA**	**REPORTS TO:**	**SW-5895-M**		**[Calculated Data]**
DATE:	**9/29/2025**				

Basin Data

	SF	Acre	C
Impervious Area	9,198	0.211	0.9
Pervious Area	15,522	0.356	0.2
Total Area	24,720	0.567	

Composite "C"	0.46	
Area * "C"	0.261	

Time of Concentration:	10.00	min
25-Year Intensity	3.61	in/hr
50-Year Intensity	4.16	in/hr
100-year Intensity:	4.69	in/hr

Rational Method Peak Flows (Q=C*I*A)

25-year Peak	0.95	cfs
50-year Peak	1.10	cfs
100-year Peak	1.24	cfs

Selected Design Storm:	100-Year
Design Infiltration Rate (in/hr):	1.00

TIME OF CONCENTRATION (Minutes)

Tc (A) Channel or Pipe:

Shape (A) =	Trapezoidal	
L (A) =	225	ft
n(A) =	0.03	Grass Channel
S(A) =	0.0039	ft/ft
R(A) =	0.78	ft
V(A) =	2.63	ft/s
Tc (A) =	1.43	min

Tc (B) Channel or Pipe:

Shape (B) =	Circular	
L (B) =	0	
n(B) =	0.013	Concrete
S(B) =	0.01	
R(B) =	0.50	
V(B) =	7.22	
Tc (B) =	0.00	

Tc (C) Shallow/Conc. Flow:

L (C) =	20	
S(C) =	16.70	%
k =	0.213	Short Grass
V (C) =	2.86	
Tc (C) =	0.12	

Tc (D) Sheet Flow:

L (D) =	22	
n(D) =	0.013	Asphalt
S(D) =	0.02	
Tc (D) Estimate =	0.66	<-- Change
Tc Esti. Total =	5.00	min. 5 mins
Resulting I (in/hr) =	6.77	
Tc (D) =	0.66	
		Goal Seek to 0
Tc(tot.) =	10.00	0.00
Intensity (in/hr)=	4.69	

PROJECT:	**KN 24394 US20, Arco to Idaho Falls**				**[Linked Data]**
BASIN:	2-1 M				**[User Input Data]**
DESIGNER:	**BCC, DEA**	**REPORTS TO:**	**SW-5895-M**		**[Calculated Data]**
DATE:	**9/29/2025**				

MODIFIED RATIONAL METHOD (BOWSTRING) FOR REQUIRED DETENTION STORAGE

#1 Time Inc. (min.)	#2 Time Inc. (sec.) (#1*60)	#3 Intensity (in./hr.)	#4 Q dev. (cfs) (A*C*#3)	#5 V in (cu. ft.)	#6 V out (cu. ft.) (Outf.*#2)	#7 Req. Storage (cu. ft.) (#5-#6)
10.00	600.00	4.69	1.24	994	66	927
5	300	6.77	1.77	711	33	678
10	600	4.69	1.23	985	66	919
15	900	3.64	0.95	1,050	99	951
20	1,200	3.16	0.83	1,161	132	1,028
25	1,500	2.69	0.70	1,196	165	1,031
30	1,800	2.21	0.58	1,157	198	959
35	2,100	2.06	0.54	1,241	231	1,010
40	2,400	1.91	0.50	1,302	265	1,037
45	2,700	1.77	0.46	1,339	298	1,042
50	3,000	1.62	0.42	1,354	331	1,023
55	3,300	1.47	0.38	1,344	364	981
60	3,600	1.32	0.34	1,312	397	915
65	3,900	1.27	0.33	1,362	430	932
70	4,200	1.22	0.32	1,404	463	941
75	4,500	1.17	0.31	1,438	496	942
80	4,800	1.12	0.29	1,465	529	935
85	5,100	1.07	0.28	1,483	562	921
90	5,400	1.02	0.27	1,494	595	899
95	5,700	0.97	0.25	1,496	628	868
100	6,000	0.92	0.24	1,491	661	830
105	6,300	0.87	0.23	1,479	694	784
110	6,600	0.82	0.21	1,458	727	731
115	6,900	0.77	0.20	1,429	760	669
120	7,200	0.72	0.19	1,393	794	599
180	10,800	0.50	0.13	1,435	1190	245
360	21,600	0.27	0.07	1,544	2381	0
720	43,200	0.15	0.04	1,724	4761	0
1440	86,400	0.09	0.02	1,946	9522	0

PROJECT:	**KN 24394 US20, Arco to Idaho Falls**				[Linked Data]
BASIN:	2-1 M				[User Input Data]
DESIGNER:	**BCC, DEA**	**REPORTS TO:**	**SW-5895-M**		[Calculated Data]
DATE:	**9/29/2025**				

Bio-Infiltration Swales

Lowpoint Swale (Priority 1):

Width (feet):	0
Length (feet):	0
Sideslope 1 (H:V):	0
Sideslope 2 (H:V):	0
Max Depth (feet):	0
Max Volume When Full (CF):	0
LP Swale Infiltration Area (SF):	0

Road Slope Swale (Priority 2):	**Roadside Slope A**	**Roadside Slope B**
Base Width (feet):	7	7
Sideslope 1: (_H:1V)	6	6
Sideslope 2: (_H:V)	6	6
Longitudinal Slope (ft/ft):	0.0000	0.0014

Determination of Max Usable Swale Length Due to Slope:

Max Water Depth At Downstream End (feet):	*1.0*	*1.0*
Swale Volume (CF):	*0*	*3929*
Length (feet):	*0*	*714*

Determination of Length of Bermed Swales:

Swale Length (feet):	0	287
Storage Depth at U/S End (feet):	1.00	0.60
Swale Volume (CF):	0	2728
Infiltration Area Per Bermed Swale (SF):	0	4761
Number of Bermed Swales:	0	1
Total Swale Infiltration Area (SF):	0	4761
Total Swale Volume (CF):	0	2728
Available Length 1 (feet):	0	287
Proposed Length 2 (feet):	0	287
Difference (feet):	0 Good (Design< Stor	0 OK! (Design> Req'd)

Total Design Storage (CF):	**2,728**
Total Infiltration Area (SF):	4,761
Swale Infiltration Rate (cfs):	0.110
Total Infiltration Rate (cfs):	0.110
Total Time to Drain (Hrs):	2.63

Required Treatment Volume:

Basin Imp. Area x 0.5 inches /12 (CF): 383 OK! (Design> Req'd)

Required Storage Volume:

Maximum Storage From Rational Column #7 (CF): 1,042 OK! (Design> Req'd)

Target Time to Drain:

From Design Requirements (Hrs): 72 OK! (Design<Req'd)

PROJECT:	**KN 24394 US20, Arco to Idaho Falls**				**[Linked Data]**
BASIN:	2-2 M				**[User Input Data]**
DESIGNER:	**BCC, DEA**	**REPORTS TO:**	**SW-5897-M**		**[Calculated Data]**
DATE:	**9/29/2025**				

Basin Data

	SF	Acre	C
Impervious Area	144,489	3.317	0.9
Pervious Area	243,825	5.597	0.2
Total Area	388,314	8.914	

Composite "C"	0.46	
Area * "C"	4.105	
Time of Concentration:	10.00	min
25-Year Intensity	3.61	in/hr
50-Year Intensity	4.16	in/hr
100-year Intensity:	4.69	in/hr

Rational Method Peak Flows (Q=C*I*A)

25-year Peak	14.94	cfs
50-year Peak	17.22	cfs
100-year Peak	19.41	cfs

Selected Design Storm: 100-Year

Design Infiltration Rate (in/hr): 1.00

TIME OF CONCENTRATION (Minutes)

Tc (A) Channel or Pipe:

Shape (A) =	Trapezoidal	
L (A) =	225	ft
n(A) =	0.03	Grass Channel
S(A) =	0.0039	ft/ft
R(A) =	0.78	ft
V(A) =	2.63	ft/s
Tc (A) =	1.43	min

Tc (B) Channel or Pipe:

Shape (B) =	Circular	
L (B) =	0	
n(B) =	0.013	Concrete
S(B) =	0.01	
R(B) =	0.50	
V(B) =	7.22	
Tc (B) =	0.00	

Tc (C) Shallow/Conc. Flow:

L (C) =	20	
S(C) =	16.70	%
k =	0.213	Short Grass
V (C) =	2.86	
Tc (C) =	0.12	

Tc (D) Sheet Flow:

L (D) =	22	
n(D) =	0.013	Asphalt
S(D) =	0.02	
Tc (D) Estimate =	0.66	<-- Change
Tc Esti. Total =	5.00	min. 5 mins
Resulting I (in/hr) =	6.77	
Tc (D) =	0.66	
		Goal Seek to 0
Tc(tot.) =	10.00	0.00
Intensity (in/hr)=	4.69	

PROJECT:	**KN 24394 US20, Arco to Idaho Falls**			
BASIN:	2-2 M			
DESIGNER:	**BCC, DEA**	**REPORTS TO:**	**SW-5897-M**	
DATE:	**9/29/2025**			

[Linked Data]
[User Input Data]
[Calculated Data]

MODIFIED RATIONAL METHOD (BOWSTRING) FOR REQUIRED DETENTION STORAGE

#1 Time Inc. (min.)	#2 Time Inc. (sec.) (#1*60)	#3 Intensity (in./hr.)	#4 Q dev. (cfs) (A*C*#3)	#5 V in (cu. ft.)	#6 V out (cu. ft.) (Outf.*#2)	#7 Req. Storage (cu. ft.) (#5-#6)
10.00	600.00	4.69	19.41	15,607	474	15,134
5	300	6.77	27.79	11,171	237	10,935
10	600	4.69	19.25	15,478	474	15,005
15	900	3.64	14.94	16,495	710	15,785
20	1,200	3.16	12.98	18,231	947	17,284
25	1,500	2.69	11.03	18,792	1184	17,608
30	1,800	2.21	9.07	18,179	1421	16,759
35	2,100	2.06	8.46	19,498	1658	17,840
40	2,400	1.91	7.85	20,451	1894	18,557
45	2,700	1.77	7.24	21,039	2131	18,908
50	3,000	1.62	6.64	21,262	2368	18,894
55	3,300	1.47	6.03	21,119	2605	18,515
60	3,600	1.32	5.42	20,611	2842	17,770
65	3,900	1.27	5.21	21,395	3078	18,316
70	4,200	1.22	5.01	22,055	3315	18,739
75	4,500	1.17	4.80	22,591	3552	19,039
80	4,800	1.12	4.60	23,005	3789	19,216
85	5,100	1.07	4.39	23,296	4026	19,270
90	5,400	1.02	4.19	23,463	4262	19,201
95	5,700	0.97	3.98	23,508	4499	19,008
100	6,000	0.92	3.78	23,429	4736	18,693
105	6,300	0.87	3.57	23,227	4973	18,254
110	6,600	0.82	3.37	22,902	5210	17,692
115	6,900	0.77	3.16	22,454	5446	17,007
120	7,200	0.72	2.96	21,882	5683	16,199
180	10,800	0.50	2.05	22,539	8525	14,015
360	21,600	0.27	1.11	24,255	17050	7,205
720	43,200	0.15	0.62	27,081	34100	0
1440	86,400	0.09	0.35	30,572	68199	0

PROJECT:	**KN 24394 US20, Arco to Idaho Falls**				[Linked Data]
BASIN:	2-2 M				[User Input Data]
DESIGNER:	**BCC, DEA**	**REPORTS TO:**	**SW-5897-M**		[Calculated Data]
DATE:	**9/29/2025**				

Bio-Infiltration Swales

Lowpoint Swale (Priority 1):

Width (feet):	0
Length (feet):	0
Sideslope 1 (H:V):	0
Sideslope 2 (H:V):	0
Max Depth (feet):	0
Max Volume When Full (CF):	0
LP Swale Infiltration Area (SF):	0

Road Slope Swale (Priority 2):	**Roadside Slope A**	**Roadside Slope B**
Base Width (feet):	9	9
Sideslope 1: (_H:1V)	6	6
Sideslope 2: (_H:V)	6	6
Longitudinal Slope (ft/ft):	0.0052	0.0038
Determination of Max Usable Swale Length Due to Slope:		
Max Water Depth At Downstream End (feet):	*1.5*	*1.5*
Swale Volume (CF):	*3245*	*4441*
Length (feet):	*288*	*395*
Determination of Length of Bermed Swales:		
Swale Length (feet):	275	375
Storage Depth at U/S End (feet):	0.07	0.08
Swale Volume (CF):	3241	4434
Infiltration Area Per Bermed Swale (SF):	5066	6919
Number of Bermed Swales:	4	2
Total Swale Infiltration Area (SF):	20262	13838
Total Swale Volume (CF):	12963	8868
Available Length 1 (feet):	3357	1159
Proposed Length 2 (feet):	1100	750
Difference (feet):	2257 **OK! (Design> Req'd**	409 **OK! (Design> Req'd)**

Total Design Storage (CF):	**21,831**
Total Infiltration Area (SF):	34,100
Swale Infiltration Rate (cfs):	0.789
Total Infiltration Rate (cfs):	0.789
Total Time to Drain (Hrs):	6.78

Required Treatment Volume:		
Basin Imp. Area x 0.5 inches /12 (CF)	6,020	**OK! (Design> Req'd)**
Required Storage Volume:		
Maximum Storage From Rational Column #7 (CF):	19,270	**OK! (Design> Req'd)**
Target Time to Drain:		
From Design Requirements (Hrs):	72	**OK! (Design<Req'd)**

PROJECT:	**KN 24394 US20, Arco to Idaho Falls**				**[Linked Data]**
BASIN:	2-3 M				**[User Input Data]**
DESIGNER:	**BCC, DEA**	**REPORTS TO:**	**SW-5943-M**		**[Calculated Data]**
DATE:	**9/29/2025**				

Basin Data

	SF	Acre	C
Impervious Area	84,051	1.930	0.9
Pervious Area	141,836	3.256	0.2
Total Area	225,887	5.186	

Composite "C"	0.46	
Area * "C"	2.388	

Time of Concentration:	10.00	min	**Rational Method Peak Flows (Q=C*I*A)**		
25-Year Intensity	3.61	in/hr	25-year Peak	8.69	cfs
50-Year Intensity	4.16	in/hr	50-year Peak	10.02	cfs
100-year Intensity:	4.69	in/hr	100-year Peak	11.29	cfs

Selected Design Storm:	100-Year
Design Infiltration Rate (in/hr):	1.00

PROJECT:	**KN 24394 US20, Arco to Idaho Falls**			
BASIN:	2-3 M			
DESIGNER:	**BCC, DEA**	**REPORTS TO:**	**SW-5943-M**	
DATE:	**9/29/2025**			

[Linked Data]
[User Input Data]
[Calculated Data]

MODIFIED RATIONAL METHOD (BOWSTRING) FOR REQUIRED DETENTION STORAGE

#1 Time Inc. (min.)	#2 Time Inc. (sec.) (#1*60)	#3 Intensity (in./hr.)	#4 Q dev. (cfs) (A*C*#3)	#5 V in (cu. ft.)	#6 V out (cu. ft.) (Outf.*#2)	#7 Req. Storage (cu. ft.) (#5-#6)
10.00	600.00	4.69	11.29	9,079	268	8,811
5	300	6.77	16.17	6,499	134	6,365
10	600	4.69	11.20	9,004	268	8,736
15	900	3.64	8.69	9,596	402	9,194
20	1,200	3.16	7.55	10,605	535	10,070
25	1,500	2.69	6.42	10,932	669	10,262
30	1,800	2.21	5.28	10,575	803	9,772
35	2,100	2.06	4.92	11,342	937	10,405
40	2,400	1.91	4.57	11,897	1071	10,826
45	2,700	1.77	4.21	12,239	1205	11,034
50	3,000	1.62	3.86	12,368	1338	11,030
55	3,300	1.47	3.51	12,285	1472	10,813
60	3,600	1.32	3.15	11,990	1606	10,384
65	3,900	1.27	3.03	12,445	1740	10,706
70	4,200	1.22	2.91	12,829	1874	10,956
75	4,500	1.17	2.79	13,142	2008	11,134
80	4,800	1.12	2.67	13,382	2141	11,241
85	5,100	1.07	2.55	13,552	2275	11,276
90	5,400	1.02	2.44	13,649	2409	11,240
95	5,700	0.97	2.32	13,675	2543	11,132
100	6,000	0.92	2.20	13,629	2677	10,952
105	6,300	0.87	2.08	13,511	2811	10,701
110	6,600	0.82	1.96	13,322	2944	10,378
115	6,900	0.77	1.84	13,062	3078	9,983
120	7,200	0.72	1.72	12,729	3212	9,517
180	10,800	0.50	1.19	13,112	4818	8,293
360	21,600	0.27	0.65	14,109	9636	4,473
720	43,200	0.15	0.36	15,753	19273	0
1440	86,400	0.09	0.21	17,784	38546	0

PROJECT:	**KN 24394 US20, Arco to Idaho Falls**				[Linked Data]
BASIN:	2-3 M				[User Input Data]
DESIGNER:	**BCC, DEA**	**REPORTS TO:**	**SW-5943-M**		[Calculated Data]
DATE:	**9/29/2025**				

Bio-Infiltration Swales

Lowpoint Swale (Priority 1):

Width (feet):	0
Length (feet):	0
Sideslope 1 (H:V):	0
Sideslope 2 (H:V):	0
Max Depth (feet):	0
Max Volume When Full (CF):	0
LP Swale Infiltration Area (SF):	0

Road Slope Swale (Priority 2):	**Roadside Slope A**	**Roadside Slope B**
Base Width (feet):	2.5	3
Sideslope 1: (_H:1V)	6	6
Sideslope 2: (_H:V)	6	6
Longitudinal Slope (ft/ft):	0.0233	0.0023
Determination of Max Usable Swale Length Due to Slope:		
Max Water Depth At Downstream End (feet):	*1.5*	*1.5*
Swale Volume (CF):	*410*	*4402*
Length (feet):	*64*	*652*
Determination of Length of Bermed Swales:		
Swale Length (feet):	60	400
Storage Depth at U/S End (feet):	0.10	0.58
Swale Volume (CF):	410	4013
Infiltration Area Per Bermed Swale (SF):	727	6192
Number of Bermed Swales:	18	1
Total Swale Infiltration Area (SF):	13081	6192
Total Swale Volume (CF):	7376	4013
Available Length 1 (feet):	2166	461
Proposed Length 2 (feet):	1080	400
Difference (feet):	1086 **OK! (Design> Req'd**	61 **OK! (Design> Req'd)**

Total Design Storage (CF):	**11,389**
Total Infiltration Area (SF):	19,273
Swale Infiltration Rate (cfs):	0.446
Total Infiltration Rate (cfs):	0.446
Total Time to Drain (Hrs):	7.02
Required Treatment Volume:	
Basin Imp. Area x 0.5 inches /12 (CF)	3,502 **OK! (Design> Req'd)**
Required Storage Volume:	
Maximum Storage From Rational Column #7 (CF):	11,276 **OK! (Design> Req'd)**
Target Time to Drain:	
From Design Requirements (Hrs):	72 **OK! (Design<Req'd)**

PROJECT:	**KN 24394 US20, Arco to Idaho Falls**				**[Linked Data]**
BASIN:	2-4 M	Sta 5969-6004			**[User Input Data]**
DESIGNER:	**BCC, DEA**	**REPORTS TO:**	**SW-5986-M**		**[Calculated Data]**
DATE:	**9/29/2025**				

Basin Data

	SF	Acre	C
Impervious Area	124,678	2.862	0.9
Pervious Area	258,190	5.927	0.2
Total Area	382,868	8.789	

Composite "C"	0.43	
Area * "C"	3.761	

			Rational Method Peak Flows (Q=C*I*A)		
Time of Concentration:	10.00	min			
25-Year Intensity	3.61	in/hr	25-year Peak	13.69	cfs
50-Year Intensity	4.16	in/hr	50-year Peak	15.78	cfs
100-year Intensity:	4.69	in/hr	100-year Peak	17.79	cfs

Selected Design Storm:	100-Year
Design Infiltration Rate (in/hr):	1.50

PROJECT:	**KN 24394 US20, Arco to Idaho Falls**			
BASIN:	2-4 M	Sta 5969-6004		
DESIGNER:	**BCC, DEA**	**REPORTS TO:**	**SW-5986-M**	
DATE:	**9/29/2025**			

[Linked Data]
[User Input Data]
[Calculated Data]

MODIFIED RATIONAL METHOD (BOWSTRING) FOR REQUIRED DETENTION STORAGE

#1 Time Inc. (min.)	#2 Time Inc. (sec.) (#1*60)	#3 Intensity (in./hr.)	#4 Q dev. (cfs) (A*C*#3)	#5 V in (cu. ft.)	#6 V out (cu. ft.) (Outf.*#2)	#7 Req. Storage (cu. ft.) (#5-#6)
10.00	600.00	4.69	17.79	14,302	689	13,613
5	300	6.77	25.46	10,237	344	9,893
10	600	4.69	17.64	14,183	689	13,495
15	900	3.64	13.69	15,116	1033	14,083
20	1,200	3.16	11.90	16,706	1377	15,329
25	1,500	2.69	10.11	17,220	1721	15,499
30	1,800	2.21	8.31	16,659	2066	14,593
35	2,100	2.06	7.75	17,867	2410	15,457
40	2,400	1.91	7.20	18,741	2754	15,987
45	2,700	1.77	6.64	19,279	3098	16,181
50	3,000	1.62	6.08	19,484	3443	16,041
55	3,300	1.47	5.52	19,353	3787	15,566
60	3,600	1.32	4.97	18,887	4131	14,756
65	3,900	1.27	4.78	19,605	4475	15,130
70	4,200	1.22	4.59	20,210	4820	15,390
75	4,500	1.17	4.40	20,702	5164	15,538
80	4,800	1.12	4.21	21,081	5508	15,573
85	5,100	1.07	4.02	21,347	5852	15,495
90	5,400	1.02	3.84	21,501	6197	15,304
95	5,700	0.97	3.65	21,541	6541	15,001
100	6,000	0.92	3.46	21,469	6885	14,584
105	6,300	0.87	3.27	21,284	7229	14,055
110	6,600	0.82	3.08	20,986	7574	13,413
115	6,900	0.77	2.90	20,575	7918	12,658
120	7,200	0.72	2.71	20,052	8262	11,790
180	10,800	0.50	1.88	20,654	12393	8,261
360	21,600	0.27	1.02	22,226	24786	0
720	43,200	0.15	0.57	24,816	49572	0
1440	86,400	0.09	0.32	28,015	99144	0

PROJECT:	**KN 24394 US20, Arco to Idaho Falls**				[Linked Data]
BASIN:	2-4 M	Sta 5969-6004			[User Input Data]
DESIGNER:	**BCC, DEA**	**REPORTS TO:**	**SW-5986-M**		[Calculated Data]
DATE:	**9/29/2025**				

Bio-Infiltration Swales

Lowpoint Swale (Priority 1):

Width (feet):	0
Length (feet):	0
Sideslope 1 (H:V):	0
Sideslope 2 (H:V):	0
Max Depth (feet):	0
Max Volume When Full (CF):	0
LP Swale Infiltration Area (SF):	0

Road Slope Swale (Priority 2):	**Roadside Slope A**	**Roadside Slope B**
Base Width (feet):	0	0
Sideslope 1: (_H:1V)	6	0
Sideslope 2: (_H:V)	6	0
Longitudinal Slope (ft/ft):	0.0069	0.0000

Determination of Max Usable Swale Length Due to Slope:

Max Water Depth At Downstream End (feet):	*1.5*	*0.0*
Swale Volume (CF):	*978*	*0*
Length (feet):	*217*	*0*

Determination of Length of Bermed Swales:

Swale Length (feet):	200	0
Storage Depth at U/S End (feet):	0.12	0.00
Swale Volume (CF):	978	0
Infiltration Area Per Bermed Swale (SF):	1944	0
Number of Bermed Swales:	17	0
Total Swale Infiltration Area (SF):	33048	0
Total Swale Volume (CF):	16622	0
Available Length 1 (feet):	3500	0
Proposed Length 2 (feet):	3400	0
Difference (feet):	100 **OK! (Design> Req'd**	0 **No Good (Design< Storage)**

Total Design Storage (CF):	**16,622**
Total Infiltration Area (SF):	33,048
Swale Infiltration Rate (cfs):	1.148
Total Infiltration Rate (cfs):	1.148
Total Time to Drain (Hrs):	3.92

Required Treatment Volume:

Basin Imp. Area x 0.5 inches /12 (CF): 5,195 **OK! (Design> Req'd)**

Required Storage Volume:

Maximum Storage From Rational Column #7 (CF): 16,181 **OK! (Design> Req'd)**

Target Time to Drain:

From Design Requirements (Hrs): 72 **OK! (Design<Req'd)**

PROJECT:	**KN 24394 US20, Arco to Idaho Falls**				**[Linked Data]**
BASIN:	2-4 M	Sta 6004-6024			**[User Input Data]**
DESIGNER:	**BCC, DEA**	**REPORTS TO:**	**SW-5986-M**		**[Calculated Data]**
DATE:	**9/29/2025**				

Basin Data

	SF	Acre	C
Impervious Area	71,245	1.636	0.9
Pervious Area	147,537	3.387	0.2
Total Area	218,782	5.023	

Composite "C"	0.43	
Area * "C"	2.149	

			Rational Method Peak Flows (Q=C*I*A)		
Time of Concentration:	10.00	min			
25-Year Intensity	3.61	in/hr	25-year Peak	7.82	cfs
50-Year Intensity	4.16	in/hr	50-year Peak	9.02	cfs
100-year Intensity:	4.69	in/hr	100-year Peak	10.16	cfs

Selected Design Storm:	100-Year
Design Infiltration Rate (in/hr):	1.50

PROJECT:	**KN 24394 US20, Arco to Idaho Falls**			
BASIN:	2-4 M	Sta 6004-6024		
DESIGNER:	**BCC, DEA**	**REPORTS TO:**	**SW-5986-M**	
DATE:	**9/29/2025**			

[Linked Data]
[User Input Data]
[Calculated Data]

MODIFIED RATIONAL METHOD (BOWSTRING) FOR REQUIRED DETENTION STORAGE

#1 Time Inc. (min.)	#2 Time Inc. (sec.) (#1*60)	#3 Intensity (in./hr.)	#4 Q dev. (cfs) (A*C*#3)	#5 V in (cu. ft.)	#6 V out (cu. ft.) (Outf.*#2)	#7 Req. Storage (cu. ft.) (#5-#6)
10.00	600.00	4.69	10.16	8,172	412	7,760
5	300	6.77	14.55	5,850	206	5,644
10	600	4.69	10.08	8,105	412	7,693
15	900	3.64	7.82	8,637	618	8,019
20	1,200	3.16	6.80	9,546	825	8,722
25	1,500	2.69	5.77	9,840	1031	8,809
30	1,800	2.21	4.75	9,519	1237	8,282
35	2,100	2.06	4.43	10,210	1443	8,767
40	2,400	1.91	4.11	10,709	1649	9,060
45	2,700	1.77	3.79	11,017	1855	9,161
50	3,000	1.62	3.47	11,133	2062	9,072
55	3,300	1.47	3.16	11,059	2268	8,791
60	3,600	1.32	2.84	10,793	2474	8,319
65	3,900	1.27	2.73	11,203	2680	8,523
70	4,200	1.22	2.62	11,548	2886	8,662
75	4,500	1.17	2.51	11,830	3092	8,737
80	4,800	1.12	2.41	12,046	3299	8,748
85	5,100	1.07	2.30	12,198	3505	8,694
90	5,400	1.02	2.19	12,286	3711	8,575
95	5,700	0.97	2.08	12,309	3917	8,392
100	6,000	0.92	1.98	12,268	4123	8,145
105	6,300	0.87	1.87	12,162	4329	7,833
110	6,600	0.82	1.76	11,992	4535	7,457
115	6,900	0.77	1.66	11,757	4742	7,016
120	7,200	0.72	1.55	11,458	4948	6,510
180	10,800	0.50	1.07	11,802	7422	4,381
360	21,600	0.27	0.58	12,701	14843	0
720	43,200	0.15	0.33	14,180	29687	0
1440	86,400	0.09	0.18	16,009	59374	0

PROJECT:	**KN 24394 US20, Arco to Idaho Falls**				[Linked Data]
BASIN:	2-4 M	Sta 6004-6024			[User Input Data]
DESIGNER:	**BCC, DEA**	**REPORTS TO:**	**SW-5986-M**		[Calculated Data]
DATE:	**9/29/2025**				

Bio-Infiltration Swales

Lowpoint Swale (Priority 1):

Width (feet):	0
Length (feet):	0
Sideslope 1 (H:V):	0
Sideslope 2 (H:V):	0
Max Depth (feet):	0
Max Volume When Full (CF):	0
LP Swale Infiltration Area (SF):	0

Road Slope Swale (Priority 2):	**Roadside Slope A**	**Roadside Slope B**
Base Width (feet):	10	0
Sideslope 1: (_H:1V)	6	0
Sideslope 2: (_H:V)	6	0
Longitudinal Slope (ft/ft):	0.0230	0.0000

Determination of Max Usable Swale Length Due to Slope:

Max Water Depth At Downstream End (feet):	*1.5*	*0.0*
Swale Volume (CF):	*783*	*0*
Length (feet):	*65*	*0*

Determination of Length of Bermed Swales:

Swale Length (feet):	65		0	
Storage Depth at U/S End (feet):	0.01		0.00	
Swale Volume (CF):	783		0	
Infiltration Area Per Bermed Swale (SF):	1237		0	
Number of Bermed Swales:	16		0	
Total Swale Infiltration Area (SF):	19791		0	
Total Swale Volume (CF):	12522		0	
Available Length 1 (feet):	2000		0	
Proposed Length 2 (feet):	1040		0	
Difference (feet):	960	OK! (Design> Req'd	0	No Good (Design< Storage)

Total Design Storage (CF):	**12,522**	
Total Infiltration Area (SF):	19,791	
Swale Infiltration Rate (cfs):	0.687	
Total Infiltration Rate (cfs):	0.687	
Total Time to Drain (Hrs):	3.70	
Required Treatment Volume:		
Basin Imp. Area x 0.5 inches /12 (CF)	2,969	OK! (Design> Req'd)
Required Storage Volume:		
Maximum Storage From Rational Column #7 (CF):	9,161	OK! (Design> Req'd)
Target Time to Drain:		
From Design Requirements (Hrs):	72	OK! (Design<Req'd)

PROJECT:	**KN 24394 US20, Arco to Idaho Falls**				**[Linked Data]**
BASIN:	2-4 M	Sta 6024-6054			**[User Input Data]**
DESIGNER:	**BCC, DEA**	**REPORTS TO:**	**SW-5986-M**		**[Calculated Data]**
DATE:	**9/29/2025**				

Basin Data

	SF	Acre	C
Impervious Area	106,867	2.453	0.9
Pervious Area	221,306	5.080	0.2
Total Area	328,173	7.534	

Composite "C"	0.43	
Area * "C"	3.224	

			Rational Method Peak Flows (Q=C*I*A)		
Time of Concentration:	10.00	min			
25-Year Intensity	3.61	in/hr	25-year Peak	11.74	cfs
50-Year Intensity	4.16	in/hr	50-year Peak	13.52	cfs
100-year Intensity:	4.69	in/hr	100-year Peak	15.25	cfs

Selected Design Storm:	100-Year
Design Infiltration Rate (in/hr):	1.50

PROJECT:	**KN 24394 US20, Arco to Idaho Falls**			
BASIN:	2-4 M	Sta 6024-6054		
DESIGNER:	**BCC, DEA**	**REPORTS TO:**	**SW-5986-M**	
DATE:	**9/29/2025**			

[Linked Data]
[User Input Data]
[Calculated Data]

MODIFIED RATIONAL METHOD (BOWSTRING) FOR REQUIRED DETENTION STORAGE

#1 Time Inc. (min.)	#2 Time Inc. (sec.) (#1*60)	#3 Intensity (in./hr.)	#4 Q dev. (cfs) (A*C*#3)	#5 V in (cu. ft.)	#6 V out (cu. ft.) (Outf.*#2)	#7 Req. Storage (cu. ft.) (#5-#6)
10.00	600.00	4.69	15.25	12,259	673	11,586
5	300	6.77	21.83	8,774	336	8,438
10	600	4.69	15.12	12,157	673	11,484
15	900	3.64	11.74	12,956	1009	11,947
20	1,200	3.16	10.20	14,319	1346	12,973
25	1,500	2.69	8.66	14,760	1682	13,078
30	1,800	2.21	7.13	14,279	2019	12,260
35	2,100	2.06	6.65	15,315	2355	12,959
40	2,400	1.91	6.17	16,063	2692	13,372
45	2,700	1.77	5.69	16,525	3028	13,497
50	3,000	1.62	5.21	16,700	3365	13,335
55	3,300	1.47	4.73	16,588	3701	12,887
60	3,600	1.32	4.26	16,189	4038	12,151
65	3,900	1.27	4.09	16,804	4374	12,430
70	4,200	1.22	3.93	17,323	4711	12,612
75	4,500	1.17	3.77	17,744	5047	12,697
80	4,800	1.12	3.61	18,069	5384	12,686
85	5,100	1.07	3.45	18,298	5720	12,577
90	5,400	1.02	3.29	18,429	6057	12,373
95	5,700	0.97	3.13	18,464	6393	12,071
100	6,000	0.92	2.97	18,402	6730	11,672
105	6,300	0.87	2.80	18,243	7066	11,177
110	6,600	0.82	2.64	17,988	7403	10,586
115	6,900	0.77	2.48	17,636	7739	9,897
120	7,200	0.72	2.32	17,187	8076	9,112
180	10,800	0.50	1.61	17,703	12113	5,590
360	21,600	0.27	0.87	19,051	24227	0
720	43,200	0.15	0.49	21,271	48453	0
1440	86,400	0.09	0.28	24,013	96906	0

PROJECT:	**KN 24394 US20, Arco to Idaho Falls**				**[Linked Data]**
BASIN:	2-4 M	Sta 6024-6054			**[User Input Data]**
DESIGNER:	**BCC, DEA**	**REPORTS TO:**	**SW-5986-M**		**[Calculated Data]**
DATE:	**9/29/2025**				

Bio-Infiltration Swales

Lowpoint Swale (Priority 1):

Width (feet):	0
Length (feet):	0
Sideslope 1 (H:V):	0
Sideslope 2 (H:V):	0
Max Depth (feet):	0
Max Volume When Full (CF):	0
LP Swale Infiltration Area (SF):	0

Road Slope Swale (Priority 2):	**Roadside Slope A**	**Roadside Slope B**
Base Width (feet):	2	0
Sideslope 1: (_H:1V)	6	0
Sideslope 2: (_H:V)	6	0
Longitudinal Slope (ft/ft):	0.0122	0.0000

Determination of Max Usable Swale Length Due to Slope:

Max Water Depth At Downstream End (feet):	*1.5*	*0.0*
Swale Volume (CF):	*738*	*0*
Length (feet):	*123*	*0*

Determination of Length of Bermed Swales:

Swale Length (feet):	120	0
Storage Depth at U/S End (feet):	0.04	0.00
Swale Volume (CF):	738	0
Infiltration Area Per Bermed Swale (SF):	1346	0
Number of Bermed Swales:	24	0
Total Swale Infiltration Area (SF):	32302	0
Total Swale Volume (CF):	17702	0
Available Length 1 (feet):	3000	0
Proposed Length 2 (feet):	2880	0
Difference (feet):	120 **OK! (Design> Req'd**	0 **No Good (Design< Storage)**

Total Design Storage (CF):	**17,702**
Total Infiltration Area (SF):	32,302
Swale Infiltration Rate (cfs):	1.122
Total Infiltration Rate (cfs):	1.122
Total Time to Drain (Hrs):	3.34

Required Treatment Volume:		
Basin Imp. Area x 0.5 inches /12 (CF)	4,453	**OK! (Design> Req'd)**
Required Storage Volume:		
Maximum Storage From Rational Column #7 (CF):	13,497	**OK! (Design> Req'd)**
Target Time to Drain:		
From Design Requirements (Hrs):	72	**OK! (Design<Req'd)**

PROJECT:	**KN 24394 US20, Arco to Idaho Falls**				**[Linked Data]**
BASIN:	2-4 M	Sta 6054-6069			**[User Input Data]**
DESIGNER:	**BCC, DEA**	**REPORTS TO:**	**SW-5986-M**		**[Calculated Data]**
DATE:	**9/29/2025**				

Basin Data

	SF	Acre	C
Impervious Area	53,434	1.227	0.9
Pervious Area	110,653	2.540	0.2
Total Area	164,086	3.767	

Composite "C"	0.43	
Area * "C"	1.612	

			Rational Method Peak Flows (Q=C*I*A)		
Time of Concentration:	10.00	min			
25-Year Intensity	3.61	in/hr	25-year Peak	5.87	cfs
50-Year Intensity	4.16	in/hr	50-year Peak	6.76	cfs
100-year Intensity:	4.69	in/hr	100-year Peak	7.62	cfs

Selected Design Storm:	100-Year
Design Infiltration Rate (in/hr):	1.50

PROJECT:	**KN 24394 US20, Arco to Idaho Falls**			
BASIN:	2-4 M	Sta 6054-6069		
DESIGNER:	**BCC, DEA**	**REPORTS TO:**	**SW-5986-M**	
DATE:	**9/29/2025**			

[Linked Data]
[User Input Data]
[Calculated Data]

MODIFIED RATIONAL METHOD (BOWSTRING) FOR REQUIRED DETENTION STORAGE

#1 Time Inc. (min.)	#2 Time Inc. (sec.) (#1*60)	#3 Intensity (in./hr.)	#4 Q dev. (cfs) (A*C*#3)	#5 V in (cu. ft.)	#6 V out (cu. ft.) (Outf.*#2)	#7 Req. Storage (cu. ft.) (#5-#6)
10.00	600.00	4.69	7.62	6,129	331	5,798
5	300	6.77	10.91	4,387	165	4,222
10	600	4.69	7.56	6,079	331	5,748
15	900	3.64	5.87	6,478	496	5,982
20	1,200	3.16	5.10	7,160	662	6,498
25	1,500	2.69	4.33	7,380	827	6,553
30	1,800	2.21	3.56	7,139	993	6,147
35	2,100	2.06	3.32	7,657	1158	6,499
40	2,400	1.91	3.08	8,032	1324	6,708
45	2,700	1.77	2.85	8,263	1489	6,773
50	3,000	1.62	2.61	8,350	1655	6,695
55	3,300	1.47	2.37	8,294	1820	6,474
60	3,600	1.32	2.13	8,095	1986	6,109
65	3,900	1.27	2.05	8,402	2151	6,251
70	4,200	1.22	1.97	8,661	2316	6,345
75	4,500	1.17	1.89	8,872	2482	6,390
80	4,800	1.12	1.81	9,035	2647	6,387
85	5,100	1.07	1.72	9,149	2813	6,336
90	5,400	1.02	1.64	9,215	2978	6,236
95	5,700	0.97	1.56	9,232	3144	6,088
100	6,000	0.92	1.48	9,201	3309	5,892
105	6,300	0.87	1.40	9,122	3475	5,647
110	6,600	0.82	1.32	8,994	3640	5,354
115	6,900	0.77	1.24	8,818	3806	5,012
120	7,200	0.72	1.16	8,594	3971	4,623
180	10,800	0.50	0.80	8,852	5957	2,895
360	21,600	0.27	0.44	9,525	11913	0
720	43,200	0.15	0.25	10,635	23827	0
1440	86,400	0.09	0.14	12,006	47653	0

PROJECT:	**KN 24394 US20, Arco to Idaho Falls**			
BASIN:	2-4 M	Sta 6054-6069		
DESIGNER:	**BCC, DEA**	**REPORTS TO:**	**SW-5986-M**	
DATE:	**9/29/2025**			

[Linked Data]
[User Input Data]
[Calculated Data]

Bio-Infiltration Swales

Lowpoint Swale (Priority 1):

Width (feet):	0
Length (feet):	0
Sideslope 1 (H:V):	0
Sideslope 2 (H:V):	0
Max Depth (feet):	0
Max Volume When Full (CF):	0
LP Swale Infiltration Area (SF):	0

Road Slope Swale (Priority 2):

	Roadside Slope A	Roadside Slope B
Base Width (feet):	6	0
Sideslope 1: (_H:1V)	6	0
Sideslope 2: (_H:V)	6	0
Longitudinal Slope (ft/ft):	0.0027	0.0000

Determination of Max Usable Swale Length Due to Slope:

Max Water Depth At Downstream End (feet):	*1.5*	*0.0*
Swale Volume (CF):	*5000*	*0*
Length (feet):	*556*	*0*

Determination of Length of Bermed Swales:

Swale Length (feet):	499	0
Storage Depth at U/S End (feet):	0.15	0.00
Swale Volume (CF):	4971	0
Infiltration Area Per Bermed Swale (SF):	7942	0
Number of Bermed Swales:	2	0
Total Swale Infiltration Area (SF):	15884	0
Total Swale Volume (CF):	9943	0
Available Length 1 (feet):	1500	0
Proposed Length 2 (feet):	998	0
Difference (feet):	502	0

OK! (Design> Req'd

No Good (Design< Storage)

Total Design Storage (CF):	**9,943**
Total Infiltration Area (SF):	15,884
Swale Infiltration Rate (cfs):	0.552
Total Infiltration Rate (cfs):	0.552
Total Time to Drain (Hrs):	3.41

Required Treatment Volume:

Basin Imp. Area x 0.5 inches /12 (CF): 2,226 OK! (Design> Req'd)

Required Storage Volume:

Maximum Storage From Rational Column #7 (CF): 6,773 OK! (Design> Req'd)

Target Time to Drain:

From Design Requirements (Hrs): 72 OK! (Design<Req'd)

PROJECT:	**KN 24394 US20, Arco to Idaho Falls**				**[Linked Data]**
BASIN:	2-6 M	Sta 6158-6138			**[User Input Data]**
DESIGNER:	**BCC, DEA**	**REPORTS TO:**	**SW-6138-M**		**[Calculated Data]**
DATE:	**9/29/2025**				

Basin Data

	SF	Acre	C
Impervious Area	67,173	1.542	0.9
Pervious Area	107,010	2.457	0.2
Total Area	174,183	3.999	

Composite "C"	0.47
Area * "C"	1.879

			Rational Method Peak Flows (Q=C*I*A)		
Time of Concentration:	10.00	min			
25-Year Intensity	3.61	in/hr	25-year Peak	6.84	cfs
50-Year Intensity	4.16	in/hr	50-year Peak	7.88	cfs
100-year Intensity:	4.69	in/hr	100-year Peak	8.89	cfs

Selected Design Storm:	100-Year
Design Infiltration Rate (in/hr):	1.00

PROJECT:	**KN 24394 US20, Arco to Idaho Falls**			
BASIN:	2-6 M	Sta 6158-6138		
DESIGNER:	**BCC, DEA**	**REPORTS TO:**	**SW-6138-M**	
DATE:	**9/29/2025**			

[Linked Data]
[User Input Data]
[Calculated Data]

MODIFIED RATIONAL METHOD (BOWSTRING) FOR REQUIRED DETENTION STORAGE

#1 Time Inc. (min.)	#2 Time Inc. (sec.) (#1*60)	#3 Intensity (in./hr.)	#4 Q dev. (cfs) (A*C*#3)	#5 V in (cu. ft.)	#6 V out (cu. ft.) (Outf.*#2)	#7 Req. Storage (cu. ft.) (#5-#6)
10.00	600.00	4.69	8.89	7,145	252	6,893
5	300	6.77	12.72	5,114	126	4,988
10	600	4.69	8.81	7,086	252	6,834
15	900	3.64	6.84	7,552	378	7,174
20	1,200	3.16	5.94	8,346	504	7,842
25	1,500	2.69	5.05	8,603	630	7,973
30	1,800	2.21	4.15	8,323	756	7,567
35	2,100	2.06	3.87	8,926	882	8,044
40	2,400	1.91	3.60	9,363	1008	8,355
45	2,700	1.77	3.32	9,632	1134	8,498
50	3,000	1.62	3.04	9,734	1260	8,474
55	3,300	1.47	2.76	9,669	1386	8,283
60	3,600	1.32	2.48	9,436	1512	7,924
65	3,900	1.27	2.39	9,795	1638	8,157
70	4,200	1.22	2.29	10,097	1764	8,333
75	4,500	1.17	2.20	10,343	1890	8,453
80	4,800	1.12	2.10	10,532	2016	8,516
85	5,100	1.07	2.01	10,665	2142	8,523
90	5,400	1.02	1.92	10,742	2268	8,474
95	5,700	0.97	1.82	10,762	2394	8,368
100	6,000	0.92	1.73	10,726	2520	8,206
105	6,300	0.87	1.63	10,633	2646	7,987
110	6,600	0.82	1.54	10,485	2772	7,713
115	6,900	0.77	1.45	10,279	2898	7,381
120	7,200	0.72	1.35	10,018	3024	6,994
180	10,800	0.50	0.94	10,319	4536	5,783
360	21,600	0.27	0.51	11,104	9072	2,032
720	43,200	0.15	0.29	12,398	18144	0
1440	86,400	0.09	0.16	13,996	36288	0

PROJECT:	**KN 24394 US20, Arco to Idaho Falls**				[Linked Data]
BASIN:	2-6 M	Sta 6158-6138			[User Input Data]
DESIGNER:	**BCC, DEA**	**REPORTS TO:**	**SW-6138-M**		[Calculated Data]
DATE:	**9/29/2025**				

Bio-Infiltration Swales

Lowpoint Swale (Priority 1):

Width (feet):	0
Length (feet):	0
Sideslope 1 (H:V):	0
Sideslope 2 (H:V):	0
Max Depth (feet):	0
Max Volume When Full (CF):	0
LP Swale Infiltration Area (SF):	0

Road Slope Swale (Priority 2):	**Roadside Slope A**	**Roadside Slope B**
Base Width (feet):	6	0
Sideslope 1: (_H:1V)	6	0
Sideslope 2: (_H:V)	6	0
Longitudinal Slope (ft/ft):	0.0074	0.0000

Determination of Max Usable Swale Length Due to Slope:

Max Water Depth At Downstream End (feet):	*1.5*	*0.0*
Swale Volume (CF):	*1824*	*0*
Length (feet):	*203*	*0*

Determination of Length of Bermed Swales:

Swale Length (feet):	200	0
Storage Depth at U/S End (feet):	0.02	0.00
Swale Volume (CF):	1824	0
Infiltration Area Per Bermed Swale (SF):	3024	0
Number of Bermed Swales:	6	0
Total Swale Infiltration Area (SF):	18144	0
Total Swale Volume (CF):	10945	0
Available Length 1 (feet):	1950	0
Proposed Length 2 (feet):	1200	0
Difference (feet):	750	0

OK! (Design> Req'd

No Good (Design< Storage)

Total Design Storage (CF):	**10,945**
Total Infiltration Area (SF):	18,144
Swale Infiltration Rate (cfs):	0.420
Total Infiltration Rate (cfs):	0.420
Total Time to Drain (Hrs):	5.64

Required Treatment Volume:

Basin Imp. Area x 0.5 inches /12 (CF): 2,799 OK! (Design> Req'd)

Required Storage Volume:

Maximum Storage From Rational Column #7 (CF): 8,523 OK! (Design> Req'd)

Target Time to Drain:

From Design Requirements (Hrs): 72 OK! (Design<Req'd)

PROJECT:	**KN 24394 US20, Arco to Idaho Falls**				**[Linked Data]**
BASIN:	2-6 M	Sta 6172-6158			**[User Input Data]**
DESIGNER:	**BCC, DEA**	**REPORTS TO:**	**SW-6138-M**		**[Calculated Data]**
DATE:	**9/29/2025**				

Basin Data

	SF	Acre	C
Impervious Area	48,227	1.107	0.9
Pervious Area	76,828	1.764	0.2
Total Area	125,055	2.871	

Composite "C"	0.47
Area * "C"	1.349

			Rational Method Peak Flows (Q=C*I*A)		
Time of Concentration:	10.00	min			
25-Year Intensity	3.61	in/hr	25-year Peak	4.91	cfs
50-Year Intensity	4.16	in/hr	50-year Peak	5.66	cfs
100-year Intensity:	4.69	in/hr	100-year Peak	6.38	cfs

Selected Design Storm:	100-Year
Design Infiltration Rate (in/hr):	1.00

PROJECT:	**KN 24394 US20, Arco to Idaho Falls**			
BASIN:	2-6 M	Sta 6172-6158		
DESIGNER:	**BCC, DEA**	**REPORTS TO:**	**SW-6138-M**	
DATE:	**9/29/2025**			

[Linked Data]
[User Input Data]
[Calculated Data]

MODIFIED RATIONAL METHOD (BOWSTRING) FOR REQUIRED DETENTION STORAGE

#1 Time Inc. (min.)	#2 Time Inc. (sec.) (#1*60)	#3 Intensity (in./hr.)	#4 Q dev. (cfs) (A*C*#3)	#5 V in (cu. ft.)	#6 V out (cu. ft.) (Outf.*#2)	#7 Req. Storage (cu. ft.) (#5-#6)
10.00	600.00	4.69	6.38	5,130	210	4,920
5	300	6.77	9.13	3,672	105	3,567
10	600	4.69	6.33	5,087	210	4,877
15	900	3.64	4.91	5,422	315	5,107
20	1,200	3.16	4.27	5,992	420	5,572
25	1,500	2.69	3.62	6,177	525	5,652
30	1,800	2.21	2.98	5,975	630	5,345
35	2,100	2.06	2.78	6,409	735	5,674
40	2,400	1.91	2.58	6,722	840	5,882
45	2,700	1.77	2.38	6,915	945	5,970
50	3,000	1.62	2.18	6,988	1050	5,938
55	3,300	1.47	1.98	6,942	1155	5,787
60	3,600	1.32	1.78	6,775	1260	5,515
65	3,900	1.27	1.71	7,032	1365	5,667
70	4,200	1.22	1.65	7,249	1470	5,779
75	4,500	1.17	1.58	7,425	1575	5,850
80	4,800	1.12	1.51	7,561	1680	5,881
85	5,100	1.07	1.44	7,657	1785	5,872
90	5,400	1.02	1.38	7,712	1890	5,822
95	5,700	0.97	1.31	7,727	1995	5,732
100	6,000	0.92	1.24	7,701	2100	5,601
105	6,300	0.87	1.17	7,634	2205	5,429
110	6,600	0.82	1.11	7,527	2310	5,217
115	6,900	0.77	1.04	7,380	2415	4,965
120	7,200	0.72	0.97	7,192	2520	4,672
180	10,800	0.50	0.67	7,408	3780	3,628
360	21,600	0.27	0.37	7,972	7560	412
720	43,200	0.15	0.21	8,901	15119	0
1440	86,400	0.09	0.12	10,049	30239	0

PROJECT:	**KN 24394 US20, Arco to Idaho Falls**				[Linked Data]
BASIN:	2-6 M	Sta 6172-6158			[User Input Data]
DESIGNER:	**BCC, DEA**	**REPORTS TO:**	**SW-6138-M**		[Calculated Data]
DATE:	**9/29/2025**				

Bio-Infiltration Swales

Lowpoint Swale (Priority 1):

Width (feet):	0
Length (feet):	0
Sideslope 1 (H:V):	0
Sideslope 2 (H:V):	0
Max Depth (feet):	0
Max Volume When Full (CF):	0
LP Swale Infiltration Area (SF):	0

Road Slope Swale (Priority 2):

	Roadside Slope A	Roadside Slope B
Base Width (feet):	0	0
Sideslope 1: (_H:1V)	6	0
Sideslope 2: (_H:V)	6	0
Longitudinal Slope (ft/ft):	0.0120	0.0000

Determination of Max Usable Swale Length Due to Slope:

Max Water Depth At Downstream End (feet):	*1.5*	*0.0*
Swale Volume (CF):	*563*	*0*
Length (feet):	*125*	*0*

Determination of Length of Bermed Swales:

Swale Length (feet):	100	0
Storage Depth at U/S End (feet):	0.30	0.00
Swale Volume (CF):	558	0
Infiltration Area Per Bermed Swale (SF):	1080	0
Number of Bermed Swales:	14	0
Total Swale Infiltration Area (SF):	15119	0
Total Swale Volume (CF):	7812	0
Available Length 1 (feet):	1400	0
Proposed Length 2 (feet):	1400	0
Difference (feet):	0	0

OK! (Design> Req'd

No Good (Design< Storage)

Total Design Storage (CF):	**7,812**
Total Infiltration Area (SF):	15,119
Swale Infiltration Rate (cfs):	0.350
Total Infiltration Rate (cfs):	0.350
Total Time to Drain (Hrs):	4.74

Required Treatment Volume:

Basin Imp. Area x 0.5 inches /12 (CF): 2,009 — OK! (Design> Req'd)

Required Storage Volume:

Maximum Storage From Rational Column #7 (CF): 5,970 — OK! (Design> Req'd)

Target Time to Drain:

From Design Requirements (Hrs): 72 — OK! (Design<Req'd)

PROJECT:	**KN 24394 US20, Arco to Idaho Falls**				**[Linked Data]**
BASIN:	2-6 M	Sta 6184-6172			**[User Input Data]**
DESIGNER:	**BCC, DEA**	**REPORTS TO:**	**SW-6138-M**		**[Calculated Data]**
DATE:	**9/29/2025**				

Basin Data

	SF	Acre	C
Impervious Area	41,337	0.949	0.9
Pervious Area	65,853	1.512	0.2
Total Area	107,190	2.461	

Composite "C"	0.47
Area * "C"	1.156

			Rational Method Peak Flows (Q=C*I*A)		
Time of Concentration:	10.00	min			
25-Year Intensity	3.61	in/hr	25-year Peak	4.21	cfs
50-Year Intensity	4.16	in/hr	50-year Peak	4.85	cfs
100-year Intensity:	4.69	in/hr	100-year Peak	5.47	cfs

Selected Design Storm:	100-Year
Design Infiltration Rate (in/hr):	1.00

PROJECT:	**KN 24394 US20, Arco to Idaho Falls**			
BASIN:	2-6 M	Sta 6184-6172		
DESIGNER:	**BCC, DEA**	**REPORTS TO:**	**SW-6138-M**	
DATE:	**9/29/2025**			

[Linked Data]
[User Input Data]
[Calculated Data]

MODIFIED RATIONAL METHOD (BOWSTRING) FOR REQUIRED DETENTION STORAGE

#1 Time Inc. (min.)	#2 Time Inc. (sec.) (#1*60)	#3 Intensity (in./hr.)	#4 Q dev. (cfs) (A*C*#3)	#5 V in (cu. ft.)	#6 V out (cu. ft.) (Outf.*#2)	#7 Req. Storage (cu. ft.) (#5-#6)
10.00	600.00	4.69	5.47	4,397	141	4,256
5	300	6.77	7.83	3,147	70	3,077
10	600	4.69	5.42	4,361	141	4,220
15	900	3.64	4.21	4,647	211	4,436
20	1,200	3.16	3.66	5,136	281	4,855
25	1,500	2.69	3.11	5,294	352	4,943
30	1,800	2.21	2.56	5,122	422	4,700
35	2,100	2.06	2.38	5,493	492	5,001
40	2,400	1.91	2.21	5,762	563	5,199
45	2,700	1.77	2.04	5,927	633	5,295
50	3,000	1.62	1.87	5,990	703	5,287
55	3,300	1.47	1.70	5,950	773	5,176
60	3,600	1.32	1.53	5,807	844	4,963
65	3,900	1.27	1.47	6,027	914	5,113
70	4,200	1.22	1.41	6,213	984	5,229
75	4,500	1.17	1.35	6,365	1055	5,310
80	4,800	1.12	1.30	6,481	1125	5,356
85	5,100	1.07	1.24	6,563	1195	5,368
90	5,400	1.02	1.18	6,610	1266	5,345
95	5,700	0.97	1.12	6,623	1336	5,287
100	6,000	0.92	1.06	6,601	1406	5,194
105	6,300	0.87	1.01	6,544	1477	5,067
110	6,600	0.82	0.95	6,452	1547	4,905
115	6,900	0.77	0.89	6,326	1617	4,709
120	7,200	0.72	0.83	6,165	1688	4,477
180	10,800	0.50	0.58	6,350	2531	3,819
360	21,600	0.27	0.31	6,833	5063	1,771
720	43,200	0.15	0.18	7,629	10125	0
1440	86,400	0.09	0.10	8,613	20250	0

PROJECT:	**KN 24394 US20, Arco to Idaho Falls**				[Linked Data]
BASIN:	2-6 M	Sta 6184-6172			[User Input Data]
DESIGNER:	**BCC, DEA**	**REPORTS TO:**	**SW-6138-M**		[Calculated Data]
DATE:	**9/29/2025**				

Bio-Infiltration Swales

Lowpoint Swale (Priority 1):

Width (feet):	0
Length (feet):	0
Sideslope 1 (H:V):	0
Sideslope 2 (H:V):	0
Max Depth (feet):	0
Max Volume When Full (CF):	0
LP Swale Infiltration Area (SF):	0

Road Slope Swale (Priority 2):	**Roadside Slope A**	**Roadside Slope B**
Base Width (feet):	0	0
Sideslope 1: (_H:1V)	6	0
Sideslope 2: (_H:V)	6	0
Longitudinal Slope (ft/ft):	0.0010	0.0000

Determination of Max Usable Swale Length Due to Slope:

Max Water Depth At Downstream End (feet):	*1.5*	*0.0*
Swale Volume (CF):	*6750*	*0*
Length (feet):	*1500*	*0*

Determination of Length of Bermed Swales:

Swale Length (feet):	750	0
Storage Depth at U/S End (feet):	0.75	0.00
Swale Volume (CF):	5906	0
Infiltration Area Per Bermed Swale (SF):	10125	0
Number of Bermed Swales:	1	0
Total Swale Infiltration Area (SF):	10125	0
Total Swale Volume (CF):	5906	0
Available Length 1 (feet):	1200	0
Proposed Length 2 (feet):	750	0
Difference (feet):	450	0

OK! (Design> Req'd

No Good (Design< Storage)

Total Design Storage (CF):	**5,906**
Total Infiltration Area (SF):	10,125
Swale Infiltration Rate (cfs):	0.234
Total Infiltration Rate (cfs):	0.234
Total Time to Drain (Hrs):	6.36

Required Treatment Volume:

Basin Imp. Area x 0.5 inches /12 (CF): 1,722 **OK! (Design> Req'd)**

Required Storage Volume:

Maximum Storage From Rational Column #7 (CF): 5,368 **OK! (Design> Req'd)**

Target Time to Drain:

From Design Requirements (Hrs): 72 **OK! (Design<Req'd)**

PROJECT:	**KN 24394 US20, Arco to Idaho Falls**				**[Linked Data]**
BASIN:	2-6 M	Sta 6218-6184			**[User Input Data]**
DESIGNER:	**BCC, DEA**	**REPORTS TO:**	**SW-6138-M**		**[Calculated Data]**
DATE:	**9/29/2025**				

Basin Data

	SF	Acre	C
Impervious Area	117,122	2.689	0.9
Pervious Area	186,582	4.283	0.2
Total Area	303,704	6.972	

Composite "C"	0.47
Area * "C"	3.277

Time of Concentration:	10.00	min	**Rational Method Peak Flows (Q=C*I*A)**			
25-Year Intensity	3.61	in/hr	25-year Peak	11.93	cfs	
50-Year Intensity	4.16	in/hr	50-year Peak	13.74	cfs	
100-year Intensity:	4.69	in/hr	100-year Peak	15.50	cfs	

Selected Design Storm:	100-Year
Design Infiltration Rate (in/hr):	1.00

PROJECT:	**KN 24394 US20, Arco to Idaho Falls**			
BASIN:	2-6 M	Sta 6218-6184		
DESIGNER:	**BCC, DEA**	**REPORTS TO:**	**SW-6138-M**	
DATE:	**9/29/2025**			

[Linked Data]
[User Input Data]
[Calculated Data]

MODIFIED RATIONAL METHOD (BOWSTRING) FOR REQUIRED DETENTION STORAGE

#1 Time Inc. (min.)	#2 Time Inc. (sec.) (#1*60)	#3 Intensity (in./hr.)	#4 Q dev. (cfs) (A*C*#3)	#5 V in (cu. ft.)	#6 V out (cu. ft.) (Outf.*#2)	#7 Req. Storage (cu. ft.) (#5-#6)
10.00	600.00	4.69	15.50	12,458	454	12,004
5	300	6.77	22.18	8,917	227	8,690
10	600	4.69	15.37	12,355	454	11,901
15	900	3.64	11.93	13,167	682	12,485
20	1,200	3.16	10.36	14,552	909	13,643
25	1,500	2.69	8.80	15,000	1136	13,864
30	1,800	2.21	7.24	14,511	1363	13,148
35	2,100	2.06	6.76	15,564	1591	13,973
40	2,400	1.91	6.27	16,325	1818	14,507
45	2,700	1.77	5.78	16,794	2045	14,749
50	3,000	1.62	5.30	16,972	2272	14,700
55	3,300	1.47	4.81	16,858	2499	14,359
60	3,600	1.32	4.33	16,452	2727	13,726
65	3,900	1.27	4.16	17,078	2954	14,124
70	4,200	1.22	4.00	17,605	3181	14,423
75	4,500	1.17	3.83	18,033	3408	14,625
80	4,800	1.12	3.67	18,363	3636	14,728
85	5,100	1.07	3.51	18,595	3863	14,733
90	5,400	1.02	3.34	18,729	4090	14,639
95	5,700	0.97	3.18	18,764	4317	14,447
100	6,000	0.92	3.01	18,701	4544	14,157
105	6,300	0.87	2.85	18,540	4772	13,769
110	6,600	0.82	2.69	18,281	4999	13,282
115	6,900	0.77	2.52	17,923	5226	12,697
120	7,200	0.72	2.36	17,467	5453	12,014
180	10,800	0.50	1.63	17,992	8180	9,812
360	21,600	0.27	0.89	19,361	16360	3,001
720	43,200	0.15	0.50	21,617	32720	0
1440	86,400	0.09	0.28	24,404	65439	0

PROJECT:	**KN 24394 US20, Arco to Idaho Falls**				[Linked Data]
BASIN:	2-6 M	Sta 6218-6184			[User Input Data]
DESIGNER:	**BCC, DEA**	**REPORTS TO:**	**SW-6138-M**		[Calculated Data]
DATE:	**9/29/2025**				

Bio-Infiltration Swales

Lowpoint Swale (Priority 1):

Width (feet):	0
Length (feet):	0
Sideslope 1 (H:V):	0
Sideslope 2 (H:V):	0
Max Depth (feet):	0
Max Volume When Full (CF):	0
LP Swale Infiltration Area (SF):	0

Road Slope Swale (Priority 2):

	Roadside Slope A	Roadside Slope B
Base Width (feet):	0	0
Sideslope 1: (_H:1V)	6	0
Sideslope 2: (_H:V)	6	0
Longitudinal Slope (ft/ft):	0.0049	0.0000

Determination of Max Usable Swale Length Due to Slope:

Max Water Depth At Downstream End (feet):	*1.5*	*0.0*
Swale Volume (CF):	*1378*	*0*
Length (feet):	*306*	*0*

Determination of Length of Bermed Swales:

Swale Length (feet):	275	0
Storage Depth at U/S End (feet):	0.15	0.00
Swale Volume (CF):	1376	0
Infiltration Area Per Bermed Swale (SF):	2727	0
Number of Bermed Swales:	12	0
Total Swale Infiltration Area (SF):	32720	0
Total Swale Volume (CF):	16513	0
Available Length 1 (feet):	3400	0
Proposed Length 2 (feet):	3300	0
Difference (feet):	100	0

OK! (Design> Req'd

No Good (Design< Storage)

Total Design Storage (CF):	**16,513**
Total Infiltration Area (SF):	32,720
Swale Infiltration Rate (cfs):	0.757
Total Infiltration Rate (cfs):	0.757
Total Time to Drain (Hrs):	5.41

Required Treatment Volume:

Basin Imp. Area x 0.5 inches /12 (CF): 4,880 — OK! (Design> Req'd)

Required Storage Volume:

Maximum Storage From Rational Column #7 (CF): 14,749 — OK! (Design> Req'd)

Target Time to Drain:

From Design Requirements (Hrs): 72 — OK! (Design<Req'd)

PROJECT:	**KN 24394 US20, Arco to Idaho Falls**				**[Linked Data]**
BASIN:	2-7 M	Sta 6218-6235			**[User Input Data]**
DESIGNER:	**BCC, DEA**	**REPORTS TO:**	**SW-6218-M**		**[Calculated Data]**
DATE:	**9/29/2025**				

Basin Data

	SF	Acre	C
Impervious Area	62,135	1.426	0.9
Pervious Area	120,114	2.757	0.2
Total Area	182,249	4.184	

Composite "C"	0.44	
Area * "C"	1.835	

			Rational Method Peak Flows (Q=C*I*A)		
Time of Concentration:	10.00	min			
25-Year Intensity	3.61	in/hr	25-year Peak	6.68	cfs
50-Year Intensity	4.16	in/hr	50-year Peak	7.70	cfs
100-year Intensity:	4.69	in/hr	100-year Peak	8.68	cfs

Selected Design Storm:	100-Year
Design Infiltration Rate (in/hr):	1.00

PROJECT:	**KN 24394 US20, Arco to Idaho Falls**			
BASIN:	2-7 M	Sta 6218-6235		
DESIGNER:	**BCC, DEA**	**REPORTS TO:**	**SW-6218-M**	
DATE:	**9/29/2025**			

[Linked Data]
[User Input Data]
[Calculated Data]

MODIFIED RATIONAL METHOD (BOWSTRING) FOR REQUIRED DETENTION STORAGE

#1 Time Inc. (min.)	#2 Time Inc. (sec.) (#1*60)	#3 Intensity (in./hr.)	#4 Q dev. (cfs) (A*C*#3)	#5 V in (cu. ft.)	#6 V out (cu. ft.) (Outf.*#2)	#7 Req. Storage (cu. ft.) (#5-#6)
10.00	600.00	4.69	8.68	6,978	299	6,679
5	300	6.77	12.42	4,995	150	4,845
10	600	4.69	8.61	6,920	299	6,621
15	900	3.64	6.68	7,375	449	6,927
20	1,200	3.16	5.81	8,151	598	7,553
25	1,500	2.69	4.93	8,402	748	7,654
30	1,800	2.21	4.06	8,128	897	7,231
35	2,100	2.06	3.78	8,718	1047	7,671
40	2,400	1.91	3.51	9,144	1196	7,948
45	2,700	1.77	3.24	9,407	1346	8,061
50	3,000	1.62	2.97	9,506	1495	8,011
55	3,300	1.47	2.69	9,443	1645	7,798
60	3,600	1.32	2.42	9,215	1794	7,421
65	3,900	1.27	2.33	9,566	1944	7,622
70	4,200	1.22	2.24	9,861	2093	7,767
75	4,500	1.17	2.15	10,101	2243	7,858
80	4,800	1.12	2.06	10,286	2393	7,893
85	5,100	1.07	1.96	10,416	2542	7,874
90	5,400	1.02	1.87	10,491	2692	7,799
95	5,700	0.97	1.78	10,510	2841	7,669
100	6,000	0.92	1.69	10,475	2991	7,485
105	6,300	0.87	1.60	10,385	3140	7,245
110	6,600	0.82	1.50	10,240	3290	6,950
115	6,900	0.77	1.41	10,039	3439	6,600
120	7,200	0.72	1.32	9,784	3589	6,195
180	10,800	0.50	0.92	10,077	5383	4,694
360	21,600	0.27	0.50	10,844	10766	78
720	43,200	0.15	0.28	12,108	21533	0
1440	86,400	0.09	0.16	13,669	43065	0

PROJECT:	**KN 24394 US20, Arco to Idaho Falls**				[Linked Data]
BASIN:	2-7 M	Sta 6218-6235			[User Input Data]
DESIGNER:	**BCC, DEA**	**REPORTS TO:**	**SW-6218-M**		[Calculated Data]
DATE:	**9/29/2025**				

Bio-Infiltration Swales

Lowpoint Swale (Priority 1):

Width (feet):	0
Length (feet):	0
Sideslope 1 (H:V):	0
Sideslope 2 (H:V):	0
Max Depth (feet):	0
Max Volume When Full (CF):	0
LP Swale Infiltration Area (SF):	0

Road Slope Swale (Priority 2):	**Roadside Slope A**	**Roadside Slope B**
Base Width (feet):	0	0
Sideslope 1: (_H:1V)	6	0
Sideslope 2: (_H:V)	6	0
Longitudinal Slope (ft/ft):	0.0015	0.0000

Determination of Max Usable Swale Length Due to Slope:

Max Water Depth At Downstream End (feet):	*1.5*	*0.0*
Swale Volume (CF):	*4500*	*0*
Length (feet):	*1000*	*0*

Determination of Length of Bermed Swales:

Swale Length (feet):	550	0
Storage Depth at U/S End (feet):	0.68	0.00
Swale Volume (CF):	4090	0
Infiltration Area Per Bermed Swale (SF):	7178	0
Number of Bermed Swales:	3	8
Total Swale Infiltration Area (SF):	21533	0
Total Swale Volume (CF):	12270	0
Available Length 1 (feet):	1700	0
Proposed Length 2 (feet):	1650	0
Difference (feet):	50	0

OK! (Design> Req'd

No Good (Design< Storage)

Total Design Storage (CF):	**12,270**
Total Infiltration Area (SF):	21,533
Swale Infiltration Rate (cfs):	0.498
Total Infiltration Rate (cfs):	0.498
Total Time to Drain (Hrs):	4.49

Required Treatment Volume:

Basin Imp. Area x 0.5 inches /12 (CF): 2,589 OK! (Design> Req'd)

Required Storage Volume:

Maximum Storage From Rational Column #7 (CF): 8,061 OK! (Design> Req'd)

Target Time to Drain:

From Design Requirements (Hrs): 72 OK! (Design<Req'd)

PROJECT:	**KN 24394 US20, Arco to Idaho Falls**				**[Linked Data]**
BASIN:	2-7 M	Sta 6235-6262			**[User Input Data]**
DESIGNER:	**BCC, DEA**	**REPORTS TO:**	**SW-6218-M**		**[Calculated Data]**
DATE:	**9/29/2025**				

Basin Data

	SF	Acre	C
Impervious Area	98,547	2.262	0.9
Pervious Area	190,502	4.373	0.2
Total Area	289,050	6.636	

Composite "C"	0.44	
Area * "C"	2.911	

			Rational Method Peak Flows (Q=C*I*A)		
Time of Concentration:	10.00	min			
25-Year Intensity	3.61	in/hr	25-year Peak	10.60	cfs
50-Year Intensity	4.16	in/hr	50-year Peak	12.21	cfs
100-year Intensity:	4.69	in/hr	100-year Peak	13.77	cfs

Selected Design Storm:	100-Year
Design Infiltration Rate (in/hr):	1.00

PROJECT:	**KN 24394 US20, Arco to Idaho Falls**			
BASIN:	2-7 M	Sta 6235-6262		
DESIGNER:	**BCC, DEA**	**REPORTS TO:**	**SW-6218-M**	
DATE:	**9/29/2025**			

[Linked Data]
[User Input Data]
[Calculated Data]

MODIFIED RATIONAL METHOD (BOWSTRING) FOR REQUIRED DETENTION STORAGE

#1 Time Inc. (min.)	#2 Time Inc. (sec.) (#1*60)	#3 Intensity (in./hr.)	#4 Q dev. (cfs) (A*C*#3)	#5 V in (cu. ft.)	#6 V out (cu. ft.) (Outf.*#2)	#7 Req. Storage (cu. ft.) (#5-#6)
10.00	600.00	4.69	13.77	11,067	650	10,417
5	300	6.77	19.71	7,922	325	7,597
10	600	4.69	13.65	10,976	650	10,326
15	900	3.64	10.60	11,697	975	10,722
20	1,200	3.16	9.21	12,928	1300	11,628
25	1,500	2.69	7.82	13,326	1624	11,701
30	1,800	2.21	6.43	12,891	1949	10,942
35	2,100	2.06	6.00	13,826	2274	11,552
40	2,400	1.91	5.57	14,502	2599	11,903
45	2,700	1.77	5.14	14,919	2924	11,995
50	3,000	1.62	4.71	15,077	3249	11,828
55	3,300	1.47	4.27	14,976	3574	11,402
60	3,600	1.32	3.84	14,616	3899	10,717
65	3,900	1.27	3.70	15,171	4224	10,948
70	4,200	1.22	3.55	15,639	4549	11,091
75	4,500	1.17	3.41	16,020	4873	11,147
80	4,800	1.12	3.26	16,313	5198	11,115
85	5,100	1.07	3.11	16,519	5523	10,996
90	5,400	1.02	2.97	16,638	5848	10,790
95	5,700	0.97	2.82	16,670	6173	10,497
100	6,000	0.92	2.68	16,614	6498	10,116
105	6,300	0.87	2.53	16,471	6823	9,648
110	6,600	0.82	2.39	16,240	7148	9,092
115	6,900	0.77	2.24	15,922	7473	8,450
120	7,200	0.72	2.10	15,517	7797	7,720
180	10,800	0.50	1.45	15,983	11696	4,287
360	21,600	0.27	0.79	17,199	23392	0
720	43,200	0.15	0.44	19,204	46785	0
1440	86,400	0.09	0.25	21,679	93569	0

PROJECT:	**KN 24394 US20, Arco to Idaho Falls**				[Linked Data]
BASIN:	2-7 M	Sta 6235-6262			[User Input Data]
DESIGNER:	**BCC, DEA**	**REPORTS TO:**	**SW-6218-M**		[Calculated Data]
DATE:	**9/29/2025**				

Bio-Infiltration Swales

Lowpoint Swale (Priority 1):

Width (feet):	0
Length (feet):	0
Sideslope 1 (H:V):	0
Sideslope 2 (H:V):	0
Max Depth (feet):	0
Max Volume When Full (CF):	0
LP Swale Infiltration Area (SF):	0

Road Slope Swale (Priority 2):	**Roadside Slope A**	**Roadside Slope B**
Base Width (feet):	0	50
Sideslope 1: (_H:1V)	6	6
Sideslope 2: (_H:V)	6	6
Longitudinal Slope (ft/ft):	0.0063	0.0071
Determination of Max Usable Swale Length Due to Slope:		
Max Water Depth At Downstream End (feet):	*1.5*	*1.5*
Swale Volume (CF):	*1071*	*8873*
Length (feet):	*238*	*211*
Determination of Length of Bermed Swales:		
Swale Length (feet):	150	200
Storage Depth at U/S End (feet):	0.56	0.08
Swale Volume (CF):	1017	8851
Infiltration Area Per Bermed Swale (SF):	1849	11896
Number of Bermed Swales:	6	3
Total Swale Infiltration Area (SF):	11097	35688
Total Swale Volume (CF):	6103	26552
Available Length 1 (feet):	900	1796
Proposed Length 2 (feet):	900	600
Difference (feet):	0 **OK! (Design> Req'd**	1196 **OK! (Design> Req'd)**

Total Design Storage (CF):	**32,655**
Total Infiltration Area (SF):	46,785
Swale Infiltration Rate (cfs):	1.083
Total Infiltration Rate (cfs):	1.083
Total Time to Drain (Hrs):	3.08

Required Treatment Volume:

Basin Imp. Area x 0.5 inches /12 (CF): 4,106 **OK! (Design> Req'd)**

Required Storage Volume:

Maximum Storage From Rational Column #7 (CF): 11,995 **OK! (Design> Req'd)**

Target Time to Drain:

From Design Requirements (Hrs): 72 **OK! (Design<Req'd)**

PROJECT:	**KN 24394 US20, Arco to Idaho Falls**				**[Linked Data]**
BASIN:	2-8 M				**[User Input Data]**
DESIGNER:	**BCC, DEA**	**REPORTS TO:**	**SW-6262-M**		**[Calculated Data]**
DATE:	**9/29/2025**				

Basin Data

	SF	Acre	C
Impervious Area	122,429	2.811	0.9
Pervious Area	275,567	6.326	0.2
Total Area	397,995	9.137	

Composite "C"	0.42	
Area * "C"	3.795	

			Rational Method Peak Flows (Q=C*I*A)		
Time of Concentration:	10.00	min			
25-Year Intensity	3.61	in/hr	25-year Peak	13.81	cfs
50-Year Intensity	4.16	in/hr	50-year Peak	15.92	cfs
100-year Intensity:	4.69	in/hr	100-year Peak	17.95	cfs

Selected Design Storm: 100-Year

Design Infiltration Rate (in/hr): 1.00

TIME OF CONCENTRATION (Minutes)

Tc (A) Channel or Pipe:

Shape (A) =	Trapezoidal	
L (A) =	225	ft
n(A) =	0.03	Grass Channel
S(A) =	0.0039	ft/ft
R(A) =	0.78	ft
V(A) =	2.63	ft/s
Tc (A) =	1.43	min

Tc (B) Channel or Pipe:

Shape (B) =	Circular	
L (B) =	0	
n(B) =	0.013	Concrete
S(B) =	0.01	
R(B) =	0.50	
V(B) =	7.22	
Tc (B) =	0.00	

Tc (C) Shallow/Conc. Flow:

L (C) =	20	
S(C) =	16.70	%
k =	0.213	Short Grass
V (C) =	2.86	
Tc (C) =	0.12	

Tc (D) Sheet Flow:

L (D) =	22	
n(D) =	0.013	Asphalt
S(D) =	0.02	
Tc (D) Estimate =	0.66	<-- Change
Tc Esti. Total =	5.00	min. 5 mins
Resulting I (in/hr) =	6.77	
Tc (D) =	0.66	
		Goal Seek to 0
Tc(tot.) =	10.00	0.00
Intensity (in/hr)=	4.69	

PROJECT:	**KN 24394 US20, Arco to Idaho Falls**			
BASIN:	2-8 M			
DESIGNER:	**BCC, DEA**	**REPORTS TO:**	**SW-6262-M**	
DATE:	**9/29/2025**			

[Linked Data]
[User Input Data]
[Calculated Data]

MODIFIED RATIONAL METHOD (BOWSTRING) FOR REQUIRED DETENTION STORAGE

#1 Time Inc. (min.)	#2 Time Inc. (sec.) (#1*60)	#3 Intensity (in./hr.)	#4 Q dev. (cfs) (A*C*#3)	#5 V in (cu. ft.)	#6 V out (cu. ft.) (Outf.*#2)	#7 Req. Storage (cu. ft.) (#5-#6)
10.00	600.00	4.69	17.95	14,428	1339	13,089
5	300	6.77	25.69	10,328	670	9,658
10	600	4.69	17.80	14,309	1339	12,970
15	900	3.64	13.81	15,249	2009	13,241
20	1,200	3.16	12.00	16,854	2678	14,175
25	1,500	2.69	10.20	17,373	3348	14,025
30	1,800	2.21	8.39	16,806	4018	12,789
35	2,100	2.06	7.82	18,025	4687	13,338
40	2,400	1.91	7.26	18,907	5357	13,550
45	2,700	1.77	6.70	19,450	6027	13,424
50	3,000	1.62	6.13	19,656	6696	12,960
55	3,300	1.47	5.57	19,524	7366	12,158
60	3,600	1.32	5.01	19,055	8035	11,019
65	3,900	1.27	4.82	19,779	8705	11,074
70	4,200	1.22	4.63	20,389	9375	11,014
75	4,500	1.17	4.44	20,885	10044	10,841
80	4,800	1.12	4.25	21,268	10714	10,554
85	5,100	1.07	4.06	21,536	11383	10,153
90	5,400	1.02	3.87	21,691	12053	9,638
95	5,700	0.97	3.68	21,732	12723	9,009
100	6,000	0.92	3.49	21,659	13392	8,267
105	6,300	0.87	3.30	21,473	14062	7,411
110	6,600	0.82	3.11	21,172	14731	6,441
115	6,900	0.77	2.92	20,758	15401	5,357
120	7,200	0.72	2.73	20,229	16071	4,159
180	10,800	0.50	1.89	20,837	24106	0
360	21,600	0.27	1.03	22,423	48212	0
720	43,200	0.15	0.58	25,036	96424	0
1440	86,400	0.09	0.33	28,263	192848	0

PROJECT:	**KN 24394 US20, Arco to Idaho Falls**				[Linked Data]
BASIN:	2-8 M				[User Input Data]
DESIGNER:	**BCC, DEA**	**REPORTS TO:**	**SW-6262-M**		[Calculated Data]
DATE:	**9/29/2025**				

Bio-Infiltration Swales

Lowpoint Swale (Priority 1):

Width (feet):	0
Length (feet):	0
Sideslope 1 (H:V):	0
Sideslope 2 (H:V):	0
Max Depth (feet):	0
Max Volume When Full (CF):	0
LP Swale Infiltration Area (SF):	0

Road Slope Swale (Priority 2):

	Roadside Slope A	Roadside Slope B
Base Width (feet):	50	2
Sideslope 1: (_H:1V)	6	6
Sideslope 2: (_H:V)	6	6
Longitudinal Slope (ft/ft):	0.0032	0.0013

Determination of Max Usable Swale Length Due to Slope:

Max Water Depth At Downstream End (feet):	*1.5*	*1.5*
Swale Volume (CF):	*19688*	*6923*
Length (feet):	*469*	*1154*

Determination of Length of Bermed Swales:

Swale Length (feet):	800		1000	
Storage Depth at U/S End (feet):	-1.06		0.20	
Swale Volume (CF):	11654		6880	
Infiltration Area Per Bermed Swale (SF):	42112		12200	
Number of Bermed Swales:	2		1	
Total Swale Infiltration Area (SF):	84224		12200	
Total Swale Volume (CF):	23308		6880	
Available Length 1 (feet):	1794		1058	
Proposed Length 2 (feet):	1600		1000	
Difference (feet):	194	OK! (Design> Req'd	58	OK! (Design> Req'd)

Total Design Storage (CF):	**30,188**	
Total Infiltration Area (SF):	96,424	
Swale Infiltration Rate (cfs):	2.232	
Total Infiltration Rate (cfs):	2.232	
Total Time to Drain (Hrs):	1.76	
Required Treatment Volume:		
Basin Imp. Area x 0.5 inches /12 (CF)	5,101	OK! (Design> Req'd)
Required Storage Volume:		
Maximum Storage From Rational Column #7 (CF):	14,175	OK! (Design> Req'd)
Target Time to Drain:		
From Design Requirements (Hrs):	72	OK! (Design<Req'd)

PROJECT:	**KN 24394 US20, Arco to Idaho Falls**				**[Linked Data]**
BASIN:	2-9 M	Sta 6290-6337			**[User Input Data]**
DESIGNER:	**BCC, DEA**	**REPORTS TO:**	**SW-6290-M**		**[Calculated Data]**
DATE:	**9/29/2025**				

Basin Data

	SF	Acre	C
Impervious Area	151,155	3.470	0.9
Pervious Area	251,082	5.764	0.2
Total Area	402,237	9.234	

Composite "C"	0.46	
Area * "C"	4.276	

			Rational Method Peak Flows (Q=C*I*A)		
Time of Concentration:	10.00	min			
25-Year Intensity	3.61	in/hr	25-year Peak	15.56	cfs
50-Year Intensity	4.16	in/hr	50-year Peak	17.94	cfs
100-year Intensity:	4.69	in/hr	100-year Peak	20.22	cfs

Selected Design Storm:	100-Year
Design Infiltration Rate (in/hr):	1.00

PROJECT:	**KN 24394 US20, Arco to Idaho Falls**			
BASIN:	2-9 M	Sta 6290-6337		
DESIGNER:	**BCC, DEA**	**REPORTS TO:**	**SW-6290-M**	
DATE:	**9/29/2025**			

[Linked Data]
[User Input Data]
[Calculated Data]

MODIFIED RATIONAL METHOD (BOWSTRING) FOR REQUIRED DETENTION STORAGE

#1 Time Inc. (min.)	#2 Time Inc. (sec.) (#1*60)	#3 Intensity (in./hr.)	#4 Q dev. (cfs) (A*C*#3)	#5 V in (cu. ft.)	#6 V out (cu. ft.) (Outf.*#2)	#7 Req. Storage (cu. ft.) (#5-#6)
10.00	600.00	4.69	20.22	16,258	947	15,311
5	300	6.77	28.95	11,637	473	11,163
10	600	4.69	20.05	16,123	947	15,176
15	900	3.64	15.56	17,183	1420	15,762
20	1,200	3.16	13.53	18,990	1894	17,097
25	1,500	2.69	11.49	19,575	2367	17,208
30	1,800	2.21	9.45	18,937	2841	16,096
35	2,100	2.06	8.82	20,311	3314	16,996
40	2,400	1.91	8.18	21,304	3788	17,516
45	2,700	1.77	7.55	21,916	4261	17,655
50	3,000	1.62	6.91	22,148	4735	17,413
55	3,300	1.47	6.28	21,999	5208	16,791
60	3,600	1.32	5.64	21,470	5682	15,789
65	3,900	1.27	5.43	22,286	6155	16,131
70	4,200	1.22	5.22	22,974	6628	16,345
75	4,500	1.17	5.00	23,533	7102	16,431
80	4,800	1.12	4.79	23,964	7575	16,388
85	5,100	1.07	4.58	24,267	8049	16,218
90	5,400	1.02	4.36	24,441	8522	15,919
95	5,700	0.97	4.15	24,487	8996	15,491
100	6,000	0.92	3.93	24,405	9469	14,936
105	6,300	0.87	3.72	24,195	9943	14,252
110	6,600	0.82	3.51	23,856	10416	13,440
115	6,900	0.77	3.29	23,389	10890	12,500
120	7,200	0.72	3.08	22,794	11363	11,431
180	10,800	0.50	2.13	23,479	17045	6,434
360	21,600	0.27	1.16	25,265	34089	0
720	43,200	0.15	0.65	28,209	68179	0
1440	86,400	0.09	0.37	31,846	136357	0

PROJECT:	**KN 24394 US20, Arco to Idaho Falls**				**[Linked Data]**
BASIN:	2-9 M	Sta 6290-6337			**[User Input Data]**
DESIGNER:	**BCC, DEA**	**REPORTS TO:**	**SW-6290-M**		**[Calculated Data]**
DATE:	**9/29/2025**				

Bio-Infiltration Swales

Lowpoint Swale (Priority 1):

Width (feet):	0
Length (feet):	0
Sideslope 1 (H:V):	0
Sideslope 2 (H:V):	0
Max Depth (feet):	0
Max Volume When Full (CF):	0
LP Swale Infiltration Area (SF):	0

Road Slope Swale (Priority 2):	**Roadside Slope A**	**Roadside Slope B**
Base Width (feet):	6	6
Sideslope 1: (_H:1V)	6	6
Sideslope 2: (_H:V)	6	6
Longitudinal Slope (ft/ft):	0.0101	0.0159
Determination of Max Usable Swale Length Due to Slope:		
Max Water Depth At Downstream End (feet):	*1.5*	*1.5*
Swale Volume (CF):	*1337*	*849*
Length (feet):	*149*	*94*
Determination of Length of Bermed Swales:		
Swale Length (feet):	140	90
Storage Depth at U/S End (feet):	0.09	0.07
Swale Volume (CF):	1334	848
Infiltration Area Per Bermed Swale (SF):	2172	1387
Number of Bermed Swales:	25	10
Total Swale Infiltration Area (SF):	54306	13873
Total Swale Volume (CF):	33358	8481
Available Length 1 (feet):	3700	1000
Proposed Length 2 (feet):	3500	900
Difference (feet):	200 **OK! (Design> Req'd**	100 **OK! (Design> Req'd)**

Total Design Storage (CF):	**41,839**
Total Infiltration Area (SF):	68,179
Swale Infiltration Rate (cfs):	1.578
Total Infiltration Rate (cfs):	1.578
Total Time to Drain (Hrs):	3.11

Required Treatment Volume:		
Basin Imp. Area x 0.5 inches /12 (CF)	6,298	**OK! (Design> Req'd)**
Required Storage Volume:		
Maximum Storage From Rational Column #7 (CF):	17,655	**OK! (Design> Req'd)**
Target Time to Drain:		
From Design Requirements (Hrs):	72	**OK! (Design<Req'd)**

PROJECT:	**KN 24394 US20, Arco to Idaho Falls**				**[Linked Data]**
BASIN:	2-9 M	Sta 6337-6367			**[User Input Data]**
DESIGNER:	**BCC, DEA**	**REPORTS TO:**	**SW-6290-M**		**[Calculated Data]**
DATE:	**9/29/2025**				

Basin Data

	SF	Acre	C
Impervious Area	128,642	2.953	0.9
Pervious Area	213,687	4.906	0.2
Total Area	342,329	7.859	

Composite "C"	0.46	
Area * "C"	3.639	

			Rational Method Peak Flows (Q=C*I*A)		
Time of Concentration:	10.00	min			
25-Year Intensity	3.61	in/hr	25-year Peak	13.25	cfs
50-Year Intensity	4.16	in/hr	50-year Peak	15.26	cfs
100-year Intensity:	4.69	in/hr	100-year Peak	17.21	cfs

Selected Design Storm:	100-Year
Design Infiltration Rate (in/hr):	1.00

PROJECT:	**KN 24394 US20, Arco to Idaho Falls**			
BASIN:	2-9 M	Sta 6337-6367		
DESIGNER:	**BCC, DEA**	**REPORTS TO:**	**SW-6290-M**	
DATE:	**9/29/2025**			

[Linked Data]
[User Input Data]
[Calculated Data]

MODIFIED RATIONAL METHOD (BOWSTRING) FOR REQUIRED DETENTION STORAGE

#1 Time Inc. (min.)	#2 Time Inc. (sec.) (#1*60)	#3 Intensity (in./hr.)	#4 Q dev. (cfs) (A*C*#3)	#5 V in (cu. ft.)	#6 V out (cu. ft.) (Outf.*#2)	#7 Req. Storage (cu. ft.) (#5-#6)
10.00	600.00	4.69	17.21	13,836	741	13,095
5	300	6.77	24.64	9,904	370	9,533
10	600	4.69	17.07	13,722	741	12,981
15	900	3.64	13.25	14,624	1111	13,512
20	1,200	3.16	11.51	16,162	1482	14,680
25	1,500	2.69	9.78	16,660	1852	14,807
30	1,800	2.21	8.04	16,117	2223	13,894
35	2,100	2.06	7.50	17,286	2593	14,693
40	2,400	1.91	6.96	18,131	2964	15,167
45	2,700	1.77	6.42	18,652	3334	15,318
50	3,000	1.62	5.88	18,849	3704	15,145
55	3,300	1.47	5.34	18,723	4075	14,648
60	3,600	1.32	4.80	18,273	4445	13,827
65	3,900	1.27	4.62	18,967	4816	14,151
70	4,200	1.22	4.44	19,552	5186	14,366
75	4,500	1.17	4.26	20,028	5557	14,471
80	4,800	1.12	4.08	20,395	5927	14,468
85	5,100	1.07	3.89	20,652	6298	14,355
90	5,400	1.02	3.71	20,801	6668	14,133
95	5,700	0.97	3.53	20,840	7038	13,802
100	6,000	0.92	3.35	20,770	7409	13,361
105	6,300	0.87	3.17	20,591	7779	12,812
110	6,600	0.82	2.98	20,303	8150	12,153
115	6,900	0.77	2.80	19,906	8520	11,386
120	7,200	0.72	2.62	19,399	8891	10,509
180	10,800	0.50	1.82	19,982	13336	6,646
360	21,600	0.27	0.99	21,503	26672	0
720	43,200	0.15	0.55	24,008	53344	0
1440	86,400	0.09	0.31	27,103	106688	0

PROJECT:	**KN 24394 US20, Arco to Idaho Falls**				[Linked Data]
BASIN:	2-9 M	Sta 6337-6367			[User Input Data]
DESIGNER:	**BCC, DEA**	**REPORTS TO:**	**SW-6290-M**		[Calculated Data]
DATE:	**9/29/2025**				

Bio-Infiltration Swales

Lowpoint Swale (Priority 1):

Width (feet):	0
Length (feet):	0
Sideslope 1 (H:V):	0
Sideslope 2 (H:V):	0
Max Depth (feet):	0
Max Volume When Full (CF):	0
LP Swale Infiltration Area (SF):	0

Road Slope Swale (Priority 2):	**Roadside Slope A**	**Roadside Slope B**
Base Width (feet):	5	0
Sideslope 1: (_H:1V)	6	0
Sideslope 2: (_H:V)	6	0
Longitudinal Slope (ft/ft):	0.0039	0.0000

Determination of Max Usable Swale Length Due to Slope:

Max Water Depth At Downstream End (feet):	*1.5*	*0.0*
Swale Volume (CF):	*3173*	*0*
Length (feet):	*385*	*0*

Determination of Length of Bermed Swales:

Swale Length (feet):	375		0	
Storage Depth at U/S End (feet):	0.04		0.00	
Swale Volume (CF):	3172		0	
Infiltration Area Per Bermed Swale (SF):	5334		0	
Number of Bermed Swales:	10		10	
Total Swale Infiltration Area (SF):	53344		0	
Total Swale Volume (CF):	31721		0	
Available Length 1 (feet):	4000		0	
Proposed Length 2 (feet):	3750		0	
Difference (feet):	250	OK! (Design> Req'd	0	No Good (Design< Storage)

Total Design Storage (CF):	**31,721**
Total Infiltration Area (SF):	53,344
Swale Infiltration Rate (cfs):	1.235
Total Infiltration Rate (cfs):	1.235
Total Time to Drain (Hrs):	3.45

Required Treatment Volume:		
Basin Imp. Area x 0.5 inches /12 (CF)	5,360	OK! (Design> Req'd)
Required Storage Volume:		
Maximum Storage From Rational Column #7 (CF):	15,318	OK! (Design> Req'd)
Target Time to Drain:		
From Design Requirements (Hrs):	72	OK! (Design<Req'd)

PROJECT:	**KN 24394 US20, Arco to Idaho Falls**				**[Linked Data]**
BASIN:	2-10 M	Sta 6367-6392			**[User Input Data]**
DESIGNER:	**BCC, DEA**	**REPORTS TO:**	**SW-6367-M**		**[Calculated Data]**
DATE:	**9/29/2025**				

Basin Data

	SF	Acre	C
Impervious Area	76,331	1.752	0.9
Pervious Area	129,006	2.962	0.2
Total Area	205,337	4.714	

Composite "C"	0.46	
Area * "C"	2.169	

			Rational Method Peak Flows (Q=C*I*A)		
Time of Concentration:	10.00	min			
25-Year Intensity	3.61	in/hr	25-year Peak	7.90	cfs
50-Year Intensity	4.16	in/hr	50-year Peak	9.10	cfs
100-year Intensity:	4.69	in/hr	100-year Peak	10.26	cfs

Selected Design Storm:	100-Year
Design Infiltration Rate (in/hr):	1.00

PROJECT:	**KN 24394 US20, Arco to Idaho Falls**			
BASIN:	2-10 M	Sta 6367-6392		
DESIGNER:	**BCC, DEA**	**REPORTS TO:**	**SW-6367-M**	
DATE:	**9/29/2025**			

[Linked Data]
[User Input Data]
[Calculated Data]

MODIFIED RATIONAL METHOD (BOWSTRING) FOR REQUIRED DETENTION STORAGE

#1 Time Inc. (min.)	#2 Time Inc. (sec.) (#1*60)	#3 Intensity (in./hr.)	#4 Q dev. (cfs) (A*C*#3)	#5 V in (cu. ft.)	#6 V out (cu. ft.) (Outf.*#2)	#7 Req. Storage (cu. ft.) (#5-#6)
10.00	600.00	4.69	10.26	8,248	365	7,883
5	300	6.77	14.69	5,904	183	5,722
10	600	4.69	10.17	8,180	365	7,815
15	900	3.64	7.90	8,718	548	8,170
20	1,200	3.16	6.86	9,635	730	8,905
25	1,500	2.69	5.83	9,932	913	9,019
30	1,800	2.21	4.79	9,608	1095	8,513
35	2,100	2.06	4.47	10,305	1278	9,027
40	2,400	1.91	4.15	10,809	1460	9,348
45	2,700	1.77	3.83	11,119	1643	9,476
50	3,000	1.62	3.51	11,237	1826	9,411
55	3,300	1.47	3.19	11,162	2008	9,154
60	3,600	1.32	2.86	10,893	2191	8,702
65	3,900	1.27	2.76	11,307	2373	8,934
70	4,200	1.22	2.65	11,656	2556	9,100
75	4,500	1.17	2.54	11,940	2738	9,201
80	4,800	1.12	2.43	12,158	2921	9,237
85	5,100	1.07	2.32	12,312	3103	9,208
90	5,400	1.02	2.21	12,400	3286	9,114
95	5,700	0.97	2.10	12,424	3469	8,955
100	6,000	0.92	2.00	12,382	3651	8,731
105	6,300	0.87	1.89	12,275	3834	8,442
110	6,600	0.82	1.78	12,104	4016	8,087
115	6,900	0.77	1.67	11,867	4199	7,668
120	7,200	0.72	1.56	11,565	4381	7,183
180	10,800	0.50	1.08	11,912	6572	5,340
360	21,600	0.27	0.59	12,819	13144	0
720	43,200	0.15	0.33	14,312	26288	0
1440	86,400	0.09	0.19	16,158	52576	0

PROJECT:	**KN 24394 US20, Arco to Idaho Falls**				[Linked Data]
BASIN:	2-10 M	Sta 6367-6392			[User Input Data]
DESIGNER:	**BCC, DEA**	**REPORTS TO:**	**SW-6367-M**		[Calculated Data]
DATE:	**9/29/2025**				

Bio-Infiltration Swales

Lowpoint Swale (Priority 1):

Width (feet):	0
Length (feet):	0
Sideslope 1 (H:V):	0
Sideslope 2 (H:V):	0
Max Depth (feet):	0
Max Volume When Full (CF):	0
LP Swale Infiltration Area (SF):	0

Road Slope Swale (Priority 2):	**Roadside Slope A**	**Roadside Slope B**
Base Width (feet):	1	0
Sideslope 1: (_H:1V)	6	0
Sideslope 2: (_H:V)	6	0
Longitudinal Slope (ft/ft):	0.0175	0.0000

Determination of Max Usable Swale Length Due to Slope:

Max Water Depth At Downstream End (feet):	*1.5*	*0.0*
Swale Volume (CF):	*450*	*0*
Length (feet):	*86*	*0*

Determination of Length of Bermed Swales:

Swale Length (feet):	80	0
Storage Depth at U/S End (feet):	0.10	0.00
Swale Volume (CF):	450	0
Infiltration Area Per Bermed Swale (SF):	848	0
Number of Bermed Swales:	31	0
Total Swale Infiltration Area (SF):	26288	0
Total Swale Volume (CF):	13938	0
Available Length 1 (feet):	2500	0
Proposed Length 2 (feet):	2480	0
Difference (feet):	20	0

OK! (Design> Req'd

No Good (Design< Storage)

Total Design Storage (CF):	**13,938**
Total Infiltration Area (SF):	26,288
Swale Infiltration Rate (cfs):	0.609
Total Infiltration Rate (cfs):	0.609
Total Time to Drain (Hrs):	4.33

Required Treatment Volume:

Basin Imp. Area x 0.5 inches /12 (CF): 3,180 — OK! (Design> Req'd)

Required Storage Volume:

Maximum Storage From Rational Column #7 (CF): 9,476 — OK! (Design> Req'd)

Target Time to Drain:

From Design Requirements (Hrs): 72 — OK! (Design<Req'd)

PROJECT:	**KN 24394 US20, Arco to Idaho Falls**				**[Linked Data]**
BASIN:	2-10 M	Sta 6392-6425			**[User Input Data]**
DESIGNER:	**BCC, DEA**	**REPORTS TO:**	**SW-6367-M**		**[Calculated Data]**
DATE:	**9/29/2025**				

Basin Data

	SF	Acre	C
Impervious Area	100,757	2.313	0.9
Pervious Area	170,288	3.909	0.2
Total Area	271,045	6.222	

Composite "C"	0.46	
Area * "C"	2.864	

			Rational Method Peak Flows (Q=C*I*A)		
Time of Concentration:	10.00	min			
25-Year Intensity	3.61	in/hr	25-year Peak	10.42	cfs
50-Year Intensity	4.16	in/hr	50-year Peak	12.01	cfs
100-year Intensity:	4.69	in/hr	100-year Peak	13.54	cfs

Selected Design Storm:	100-Year
Design Infiltration Rate (in/hr):	1.00

PROJECT:	**KN 24394 US20, Arco to Idaho Falls**			
BASIN:	2-10 M	Sta 6392-6425		
DESIGNER:	**BCC, DEA**	**REPORTS TO:**	**SW-6367-M**	
DATE:	**9/29/2025**			

[Linked Data]
[User Input Data]
[Calculated Data]

MODIFIED RATIONAL METHOD (BOWSTRING) FOR REQUIRED DETENTION STORAGE

#1 Time Inc. (min.)	#2 Time Inc. (sec.) (#1*60)	#3 Intensity (in./hr.)	#4 Q dev. (cfs) (A*C*#3)	#5 V in (cu. ft.)	#6 V out (cu. ft.) (Outf.*#2)	#7 Req. Storage (cu. ft.) (#5-#6)
10.00	600.00	4.69	13.54	10,888	615	10,273
5	300	6.77	19.39	7,793	308	7,486
10	600	4.69	13.43	10,798	615	10,183
15	900	3.64	10.42	11,508	923	10,585
20	1,200	3.16	9.06	12,718	1230	11,488
25	1,500	2.69	7.69	13,110	1538	11,572
30	1,800	2.21	6.33	12,682	1845	10,837
35	2,100	2.06	5.90	13,602	2153	11,449
40	2,400	1.91	5.48	14,267	2460	11,807
45	2,700	1.77	5.05	14,678	2768	11,910
50	3,000	1.62	4.63	14,833	3076	11,757
55	3,300	1.47	4.20	14,733	3383	11,350
60	3,600	1.32	3.78	14,379	3691	10,688
65	3,900	1.27	3.64	14,925	3998	10,927
70	4,200	1.22	3.49	15,386	4306	11,080
75	4,500	1.17	3.35	15,760	4613	11,147
80	4,800	1.12	3.21	16,049	4921	11,128
85	5,100	1.07	3.06	16,252	5228	11,023
90	5,400	1.02	2.92	16,369	5536	10,833
95	5,700	0.97	2.78	16,400	5844	10,556
100	6,000	0.92	2.63	16,345	6151	10,193
105	6,300	0.87	2.49	16,204	6459	9,745
110	6,600	0.82	2.35	15,977	6766	9,211
115	6,900	0.77	2.20	15,664	7074	8,590
120	7,200	0.72	2.06	15,266	7381	7,884
180	10,800	0.50	1.43	15,724	11072	4,652
360	21,600	0.27	0.78	16,921	22144	0
720	43,200	0.15	0.44	18,892	44288	0
1440	86,400	0.09	0.25	21,328	88576	0

PROJECT:	**KN 24394 US20, Arco to Idaho Falls**				[Linked Data]
BASIN:	2-10 M	Sta 6392-6425			[User Input Data]
DESIGNER:	**BCC, DEA**	**REPORTS TO:**	**SW-6367-M**		[Calculated Data]
DATE:	**9/29/2025**				

Bio-Infiltration Swales

Lowpoint Swale (Priority 1):

Width (feet):	0
Length (feet):	0
Sideslope 1 (H:V):	0
Sideslope 2 (H:V):	0
Max Depth (feet):	0
Max Volume When Full (CF):	0
LP Swale Infiltration Area (SF):	0

Road Slope Swale (Priority 2):	**Roadside Slope A**	**Roadside Slope B**
Base Width (feet):	4	0
Sideslope 1: (_H:1V)	6	0
Sideslope 2: (_H:V)	6	0
Longitudinal Slope (ft/ft):	0.0034	0.0000

Determination of Max Usable Swale Length Due to Slope:

Max Water Depth At Downstream End (feet):	*1.5*	*0.0*
Swale Volume (CF):	*3309*	*0*
Length (feet):	*441*	*0*

Determination of Length of Bermed Swales:

Swale Length (feet):	400	0
Storage Depth at U/S End (feet):	0.14	0.00
Swale Volume (CF):	3296	0
Infiltration Area Per Bermed Swale (SF):	5536	0
Number of Bermed Swales:	8	0
Total Swale Infiltration Area (SF):	44288	0
Total Swale Volume (CF):	26365	0
Available Length 1 (feet):	3300	0
Proposed Length 2 (feet):	3200	0
Difference (feet):	100	0

OK! (Design> Req'd

No Good (Design< Storage)

Total Design Storage (CF):	**26,365**
Total Infiltration Area (SF):	44,288
Swale Infiltration Rate (cfs):	1.025
Total Infiltration Rate (cfs):	1.025
Total Time to Drain (Hrs):	3.23

Required Treatment Volume:

Basin Imp. Area x 0.5 inches /12 (CF): 4,198 — OK! (Design> Req'd)

Required Storage Volume:

Maximum Storage From Rational Column #7 (CF): 11,910 — OK! (Design> Req'd)

Target Time to Drain:

From Design Requirements (Hrs): 72 — OK! (Design<Req'd)

Appendix C

Typical Sections

DAVID EVANS AND ASSOCIATES INC.

PHASE 1

US-20 TYPICAL SECTION

Sta. 6425+00 to Sta. 6445+00

* Median Width Varies Between Sta. 6445+00 to Sta. 6470+00

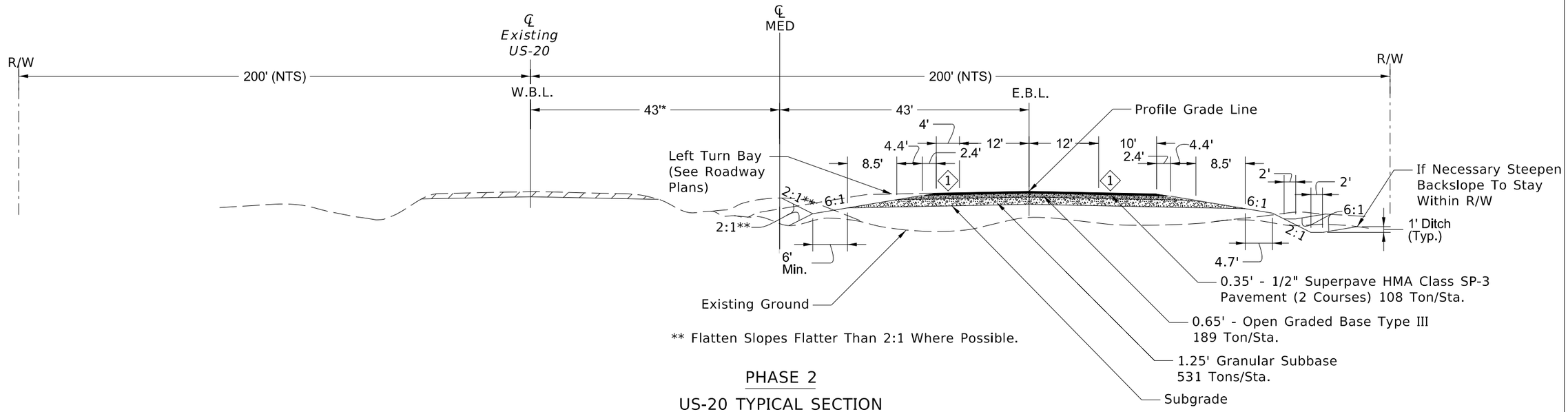

** Flatten Slopes Flatter Than 2:1 Where Possible.

PHASE 2

US-20 TYPICAL SECTION

Sta. 6425+00 to Sta. 6445+00

* Median Width Varies Between Sta. 6445+00 to Sta. 6470+00

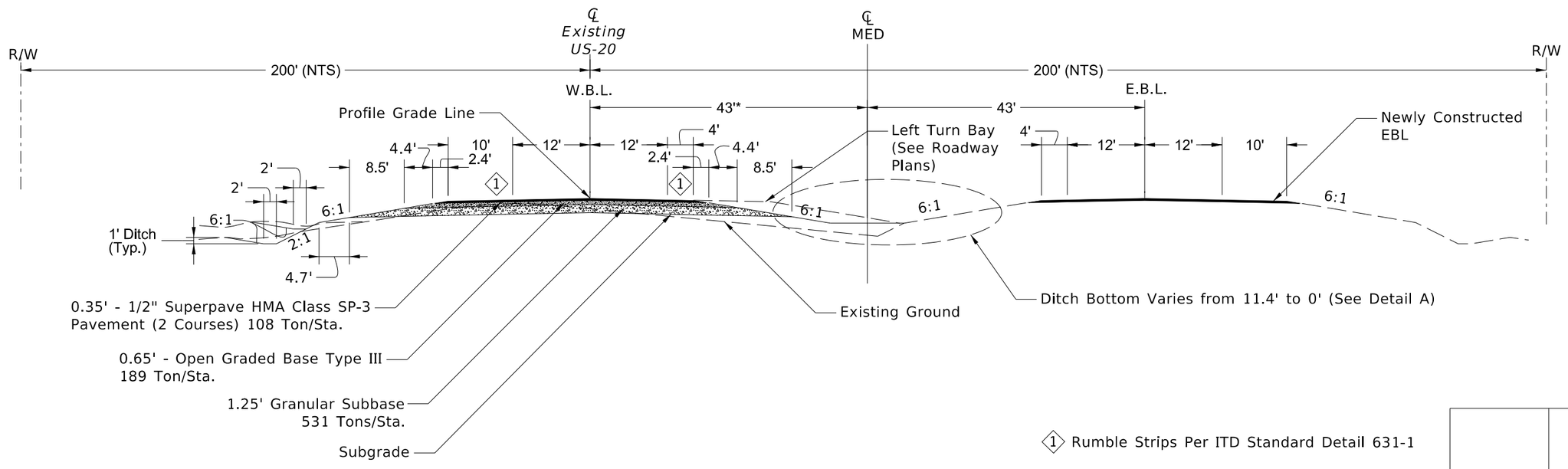

1 Rumble Strips Per ITD Standard Detail 631-1

REVISIONS				DESIGNED	SCALES SHOWN	IDAHO TRANSPORTATION DEPARTMENT	PROJECT NO.	TYPICALS	English
NO.	DATE	BY	DESCRIPTION	J. ALLEN	ARE FOR 11" X 17" PRINTS ONLY		A023(244)	US 20, MP 291 TO IDAHO FALLS	COUNTY: BONNEVILLE
				DESIGN CHECKED: K. KAUER					KEY NUMBER: 23244
				DETAILED: R.DAY	CADD FILE NAME: 23244_TYPI_000.DGN				SHEET 18 OF 478
				DRAWING CHECKED: K. KAUER	DRAWING DATE: 25-NOV-2025	Horrocks.			

NOT APPROVED FOR INTERMEDIATE CONSTRUCTION

DETAIL A

EBL & WBL INDEPENDENT VERTICAL ALIGNMENTS
(SHIFTING SLOPE MEDIAN GRADING)

Sta. 6425+00 to Sta. 6445+00

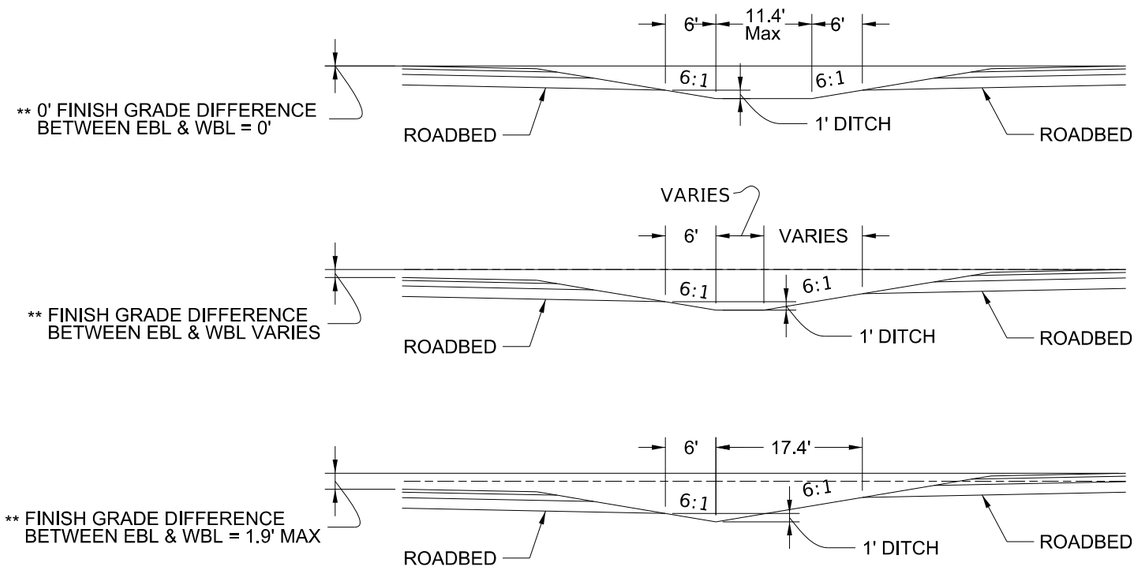

MEDIAN SLOPE CRITERIA
USE A 6:1 SLOPE ON EACH ROADWAY UNTIL THE HEIGHT OF THE UPPER ROADWAY CAUSES THE SLOPE TO INTERSECT AT THE MINIMUM DITCH DEPTH ON THE LOWER ROADWAY.
MAXIMUM ELEVATION DIFFERENCE BETWEEN EBL & WBL IS 1.9'. DITCH BOTTOM WIDTH VARIES FROM 11.4' TO 0'.
** ELEVATION DIFFERENCE OF OPPOSING LANES.

REVISIONS			
NO.	DATE	BY	DESCRIPTION

DESIGNED J. ALLEN	SCALES SHOWN ARE FOR 11" X 17" PRINTS ONLY	IDAHO TRANSPORTATION DEPARTMENT
DESIGN CHECKED K. KAUER		
DETAILED R.DAY	CADD FILE NAME 23244 TYPI 000.DGN	
DRAWING CHECKED K. KAUER	DRAWING DATE: 25-NOV-2025	Horrocks.

PROJECT NO.	TYPICALS	
A023(244)	US 20, MP 291 TO IDAHO FALLS	English
		COUNTY BONNEVILLE
		KEY NUMBER 23244
		SHEET 19 OF 478

NOT APPROVED FOR CONSTRUCTION
INTERMEDIATE

PHASE 1

US-20 TYPICAL SECTION

Sta. 6470+00 to Sta. 6950+90.69
Median Width Varies Between Sta. 6950+90.69 to Sta. 6972+95.30

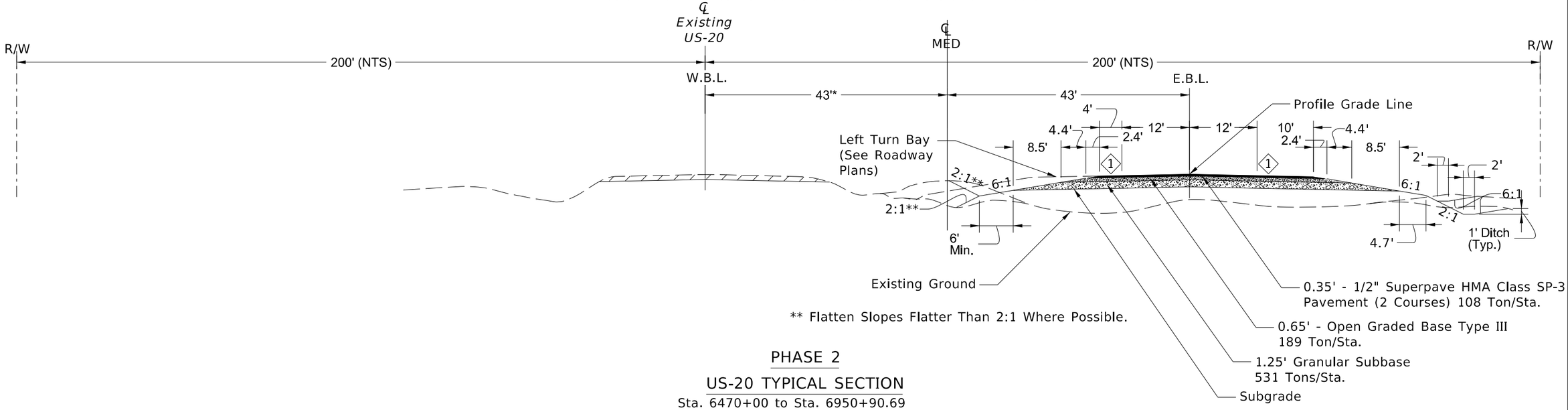

** Flatten Slopes Flatter Than 2:1 Where Possible.

PHASE 2

US-20 TYPICAL SECTION

Sta. 6470+00 to Sta. 6950+90.69
Median Width Varies Between Sta. 6950+90.69 to Sta. 6972+95.30

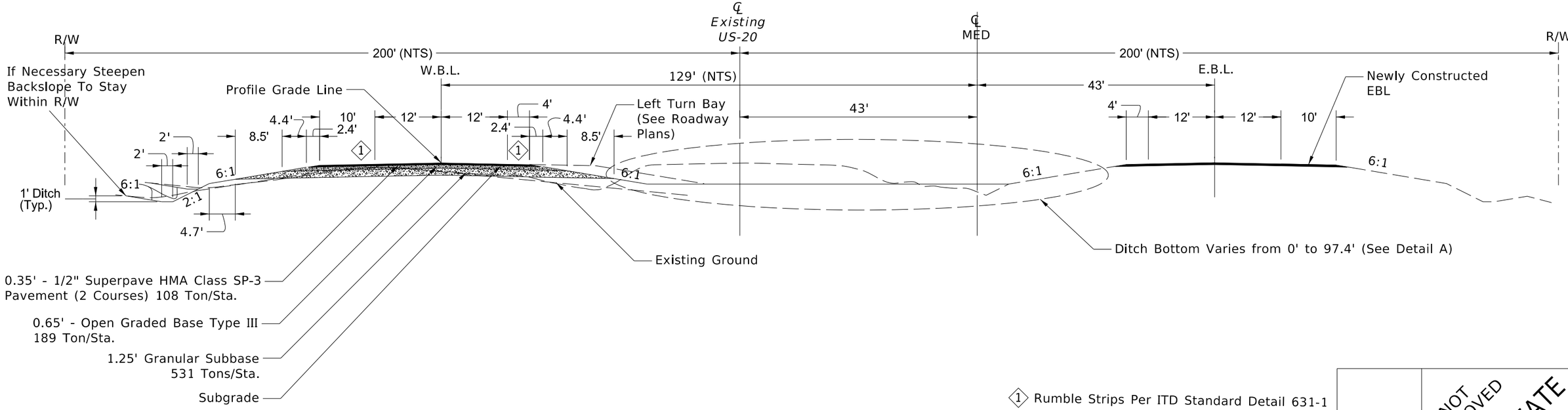

1 Rumble Strips Per ITD Standard Detail 631-1

REVISIONS			
NO.	DATE	BY	DESCRIPTION

DESIGNED	J. ALLEN
DESIGN CHECKED	K. KAUER
DETAILED	R.DAY
DRAWING CHECKED	K. KAUER

SCALES SHOWN ARE FOR 11" X 17" PRINTS ONLY

CADD FILE NAME 23244 TYPI 000.DGN

DRAWING DATE: 25-NOV-2025

IDAHO TRANSPORTATION DEPARTMENT

Horrocks.

PROJECT NO.

A023(244)

TYPICALS

US 20, MP 291
TO IDAHO FALLS

English

COUNTY BONNEVILLE

KEY NUMBER 23244

SHEET 20 OF 478

NOT APPROVED FOR CONSTRUCTION
INTERMEDIATE

DETAIL A (NTS)

EBL & WBL INDEPENDENT VERTICAL ALIGNMENTS
(SHIFTING SLOPE MEDIAN GRADING)

Sta. 6470+00 to Sta. 6950+90.69

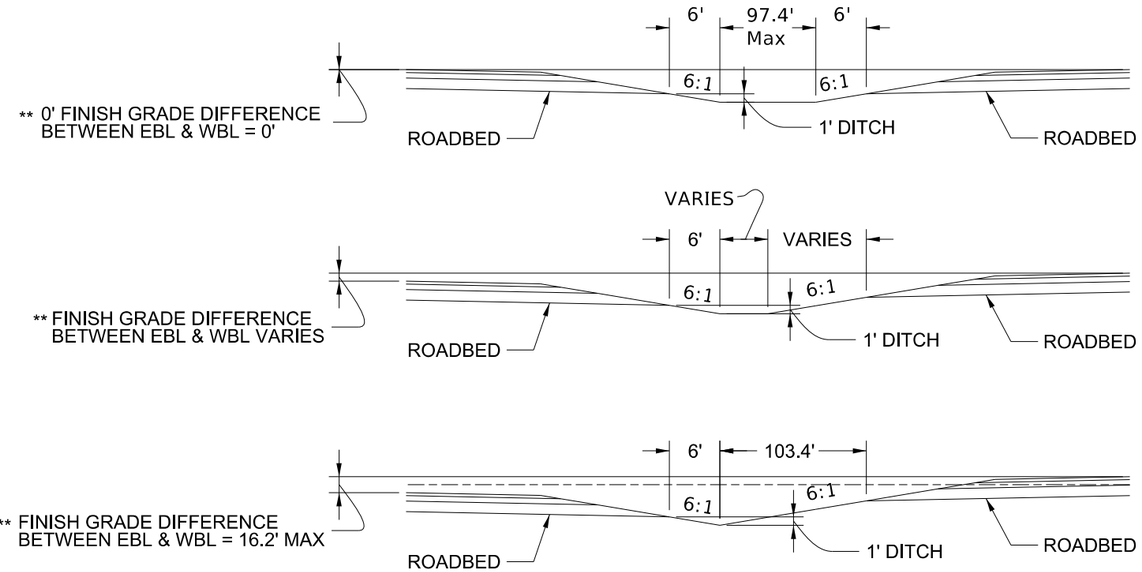

MEDIAN SLOPE CRITERIA
USE A 6:1 SLOPE ON EACH ROADWAY UNTIL THE HEIGHT OF THE UPPER ROADWAY CAUSES THE SLOPE TO INTERSECT AT THE MINIMUM DITCH DEPTH ON THE LOWER ROADWAY.
MAXIMUM ELEVATION DIFFERENCE BETWEEN EBL & WBL IS 16.2'. DITCH BOTTOM WIDTH VARIES FROM 97.4' TO 0'.
** ELEVATION DIFFERENCE OF OPPOSING LANES.

REVISIONS			
NO.	DATE	BY	DESCRIPTION

DESIGNED J. ALLEN	SCALES SHOWN ARE FOR 11" X 17" PRINTS ONLY	IDAHO TRANSPORTATION DEPARTMENT
DESIGN CHECKED K. KAUER		
DETAILED R.DAY	CADD FILE NAME 23244 TYPI 000.DGN	
DRAWING CHECKED K. KAUER	DRAWING DATE: 25-NOV-2025	Horrocks.

PROJECT NO.	TYPICALS	
A023(244)	US 20, MP 291 TO IDAHO FALLS	English
		COUNTY BONNEVILLE
		KEY NUMBER 23244
		SHEET 21 OF 478

NOT APPROVED FOR INTERMEDIATE CONSTRUCTION

* MEDIAN ℄ TO ℄ OF EBL AND WBL (SEE PLANS)		
STATION	WIDTH LT.	WIDTH RT.
5895+00 - 6094+33.70	43'	43'
6094+33.70 - 6115+46.30	Varies 43' to 128'	43'
6115+46.30 - 6120+53.68	128'	43'
6120+53.68 - 6141+66.30	Varies 128' - 43'	43'
6141+66.30 - 6242+33.70	43'	43'
6242+33.70 TO 6263+46.30	Varies 43' to 128'	43'
6263+46.30 - 6268+53.70	128'	43'
6268+53.70 - 6289+66.30	Varies 128' - 43'	43'
6289+66.30 - 6425+00	43'	43'

PHASE 1

US-20 TYPICAL SECTION

Sta. 5895+00 to Sta. 6425+00

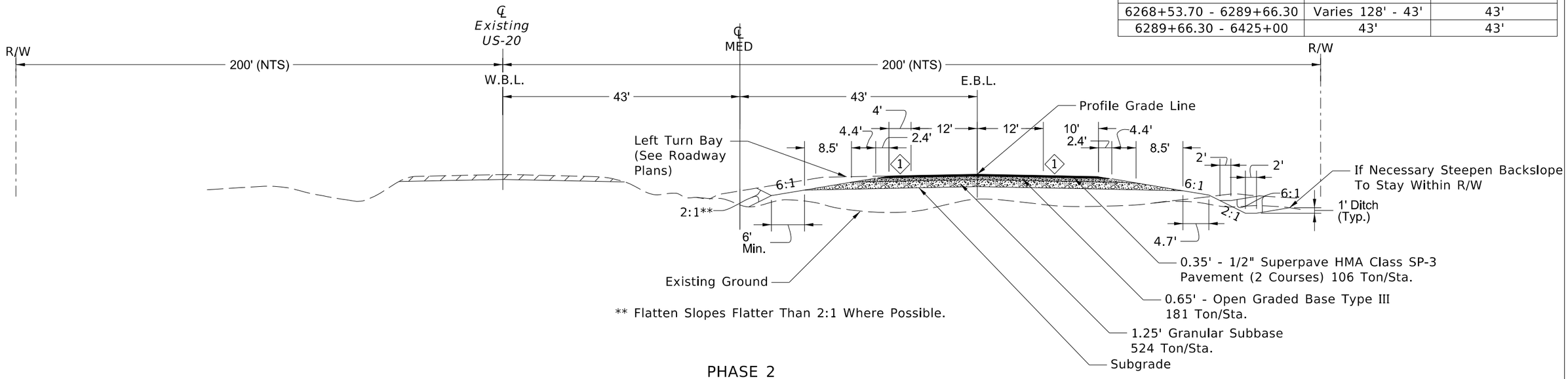

** Flatten Slopes Flatter Than 2:1 Where Possible.

PHASE 2

US-20 TYPICAL SECTION

Sta. 5895+00 to Sta. 6425+00

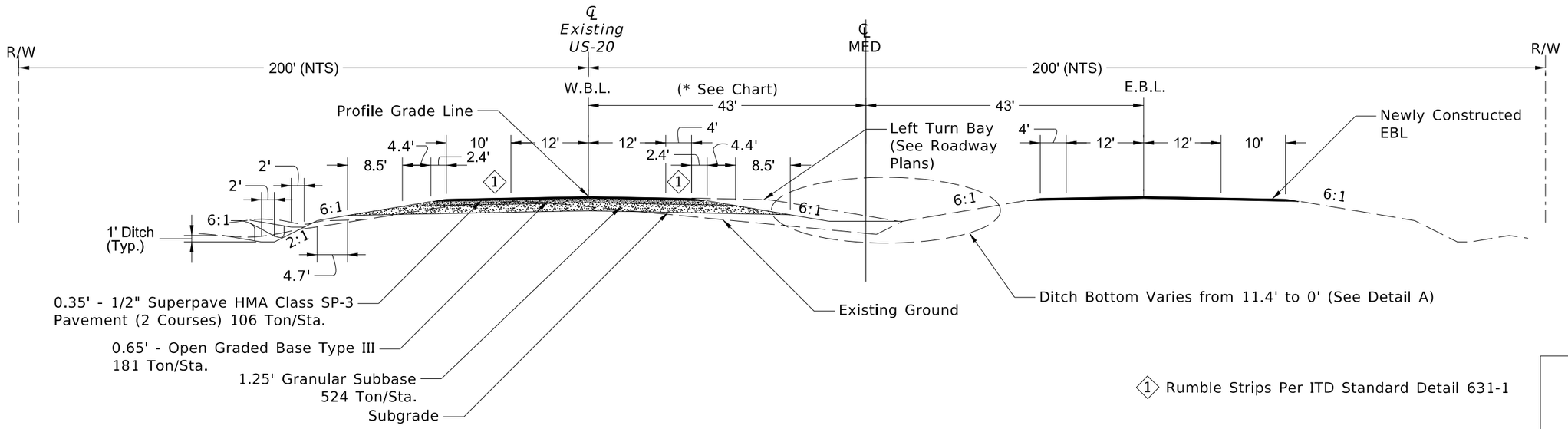

1 Rumble Strips Per ITD Standard Detail 631-1

REVISIONS			
NO.	DATE	BY	DESCRIPTION

DESIGNED R. DAY	SCALES SHOWN ARE FOR 11" X 17" PRINTS ONLY	IDAHO TRANSPORTATION DEPARTMENT
DESIGN CHECKED K. KAUER		
DETAILED R. DAY	CADD FILE NAME 24394 TYPI 000.DGN	
DRAWING CHECKED K. KAUER	DRAWING DATE: 25-NOV-2025	Horrocks.

PROJECT NO.	TYPICALS	English
A024(149)	US 20, BONNEVILLE COUNTY LINE TO MP 291	COUNTY BINGHAM/BONNEVILLE
		KEY NUMBER 24149
		SHEET 18 OF 441

NOT APPROVED FOR CONSTRUCTION — INTERMEDIATE

DETAIL A

EBL & WBL INDEPENDENT VERTICAL ALIGNMENTS
(SHIFTING SLOPE MEDIAN GRADING)

Sta. 5895+00 to Sta. 6425+00

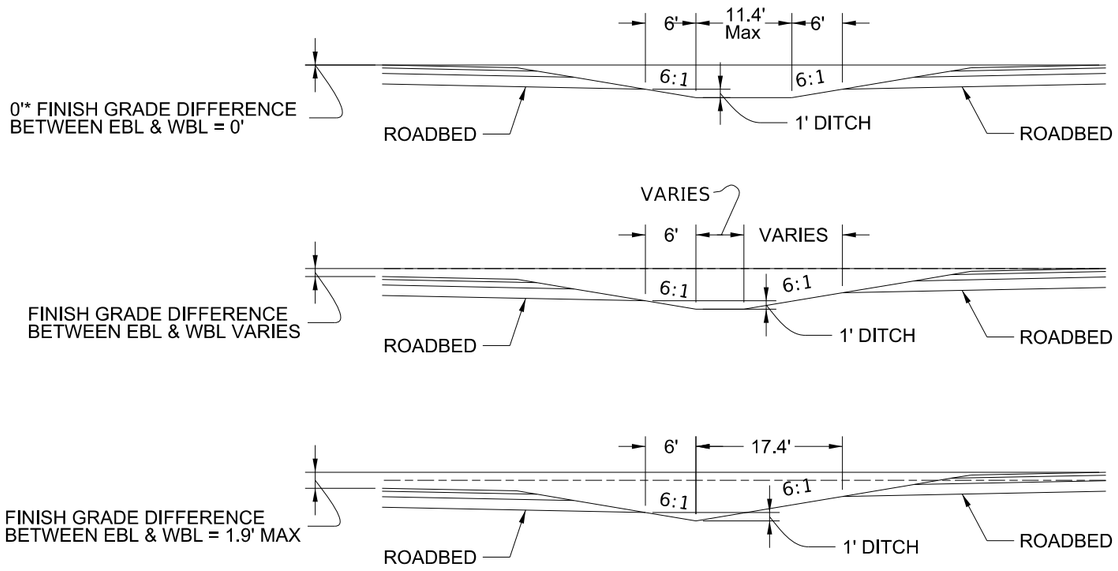

MEDIAN SLOPE CRITERIA
USE A 6:1 SLOPE ON EACH ROADWAY UNTIL THE HEIGHT OF THE UPPER ROADWAY CAUSES THE SLOPE TO INTERSECT AT THE MINIMUM DITCH DEPTH ON THE LOWER ROADWAY.
MAXIMUM ELEVATION DIFFERENCE BETWEEN EBL & WBL IS 1.9'. DITCH BOTTOM WIDTH VARIES FROM 11.4' TO 0'.
** ELEVATION DIFFERENCE OF OPPOSING LANES.

REVISIONS			
NO.	DATE	BY	DESCRIPTION

DESIGNED R. DAY	SCALES SHOWN ARE FOR 11" X 17" PRINTS ONLY	IDAHO TRANSPORTATION DEPARTMENT
DESIGN CHECKED K. KAUER		
DETAILED R. DAY	CADD FILE NAME 24394 TYPI 000.DGN	
DRAWING CHECKED K. KAUER	DRAWING DATE: 25-NOV-2025	Horrocks.

PROJECT NO.	TYPICALS	
A024(149)	US 20, BONNEVILLE COUNTY LINE TO MP 291	English
		COUNTY BINGHAM/BONNEVILLE
		KEY NUMBER 24149
		SHEET 19 OF 441

NOT APPROVED
INTERMEDIATE
FOR CONSTRUCTION

Appendix D

Drainage Plans and Profiles

DAVID EVANS AND ASSOCIATES INC.

T.3N., R.33E., B.M.

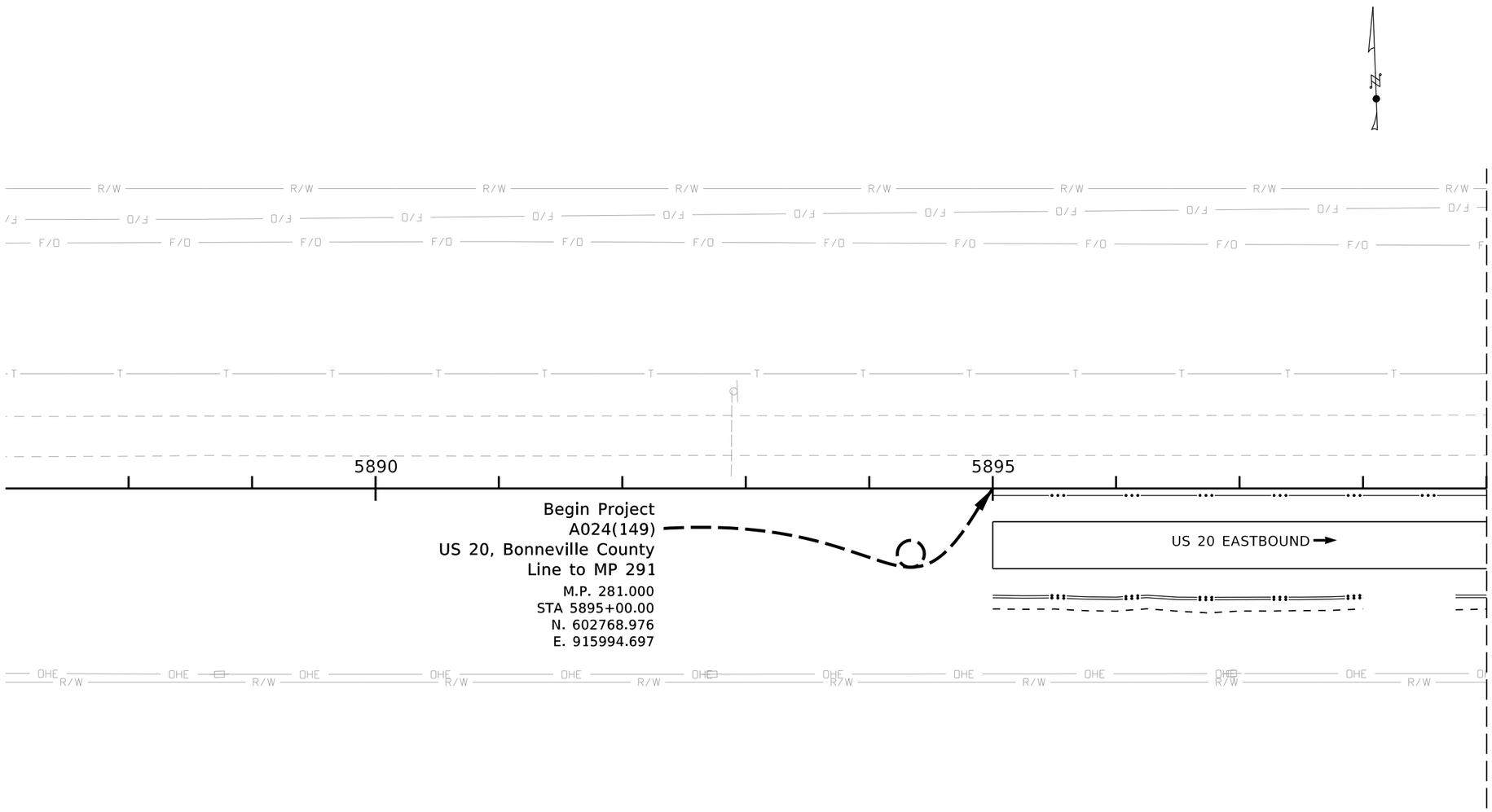

Scale (Feet)
50 0 50 100

REVISIONS			
NO.	DATE	BY	DESCRIPTION

DESIGNED D. ABEDI	SCALES SHOWN ARE FOR 11" X 17" PRINTS ONLY	IDAHO TRANSPORTATION DEPARTMENT YOUR Safety→YOUR Mobility→YOUR Economic Opportunity DAVID EVANS AND ASSOCIATES INC.
DESIGN CHECKED C. MCALISTER		
DETAILED P. CONSALVO	CADD FILE NAME 24149_DrpI_D201A.DGN	
DRAWING CHECKED C. MCALISTER	DRAWING DATE: November 21, 2025	

PROJECT NO.	DRAINAGE PLAN	ENGLISH
A024(149)	US 20, BONNEVILLE COUNTY LINE TO MP 291 STA. 5887+00 TO STA. 5899+00 PHASE 1	COUNTY BINGHAM/BONNEVILLE KEY NUMBER 24149 SHEET 194 OF 441

NOT APPROVED
INTERMEDIATE
FOR CONSTRUCTION

November 25, 2025 9:49:19 AM
pw://itd-pw.bentley.com:itd-pw-01/Documents/District 6/Projects/prj24394/Project_Development/Plan Sheets/Package 2 (KN 24149)/Drainage/24149_DrpI_D201A

T.3N., R.33E., B.M.

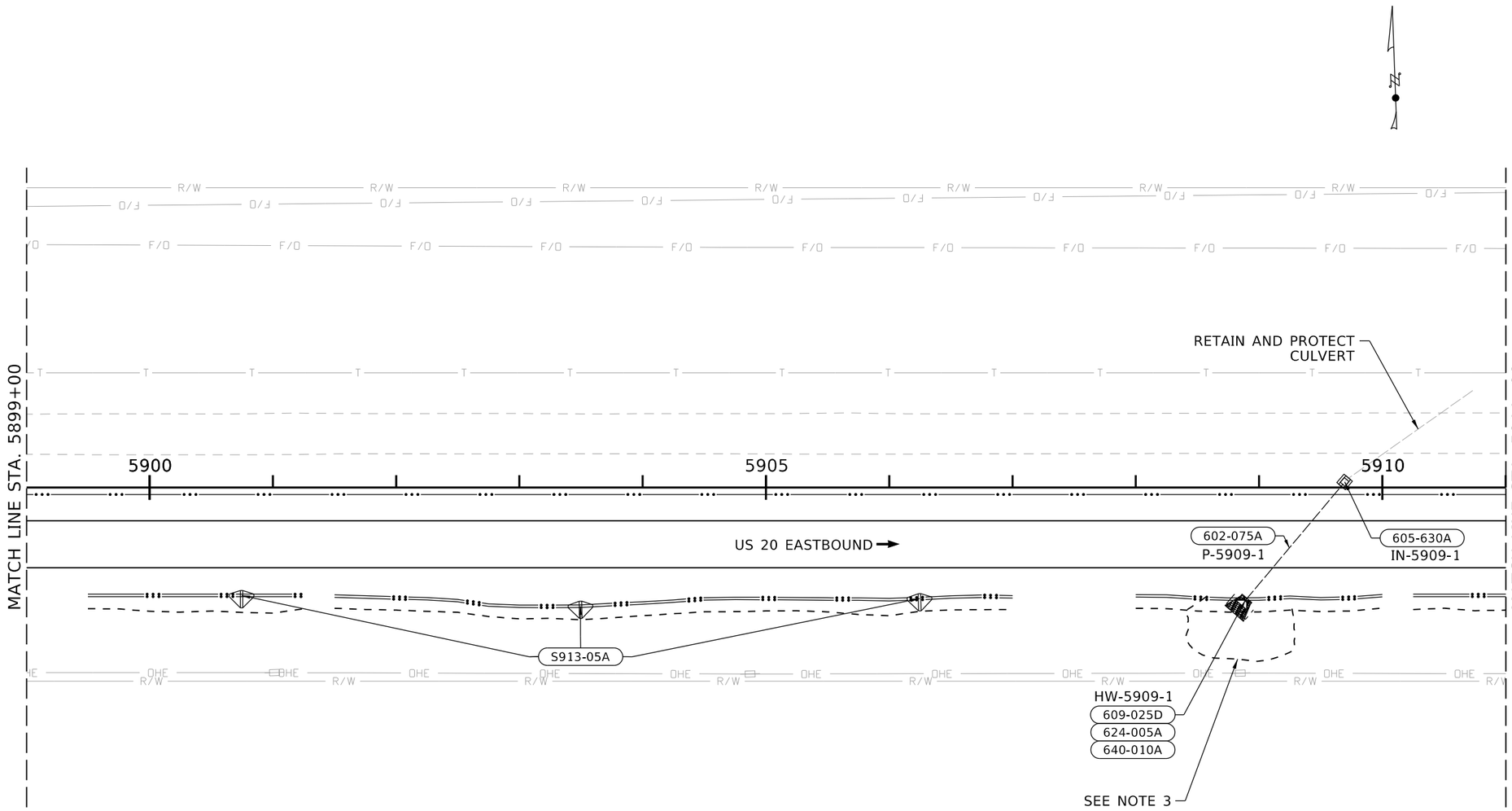

602-075A **42" PIPE CULVERT**
124 FT STA. 5908+88.93, 91.39' RT TO STA. 5909+69.44, 4.57' LT

605-630A **INLET TYPE 8**
1 EACH STA. 5909+69.44, 4.57' LT

609-025D **MINOR STRUCTURES (42" CONCRETE HEADWALL)**
1 EACH STA. 5908+88.93, 91.39' RT

624-005A **LOOSE RIPRAP (CLASS I)**
14.1 CY STA. 5908+88.93, 91.39' RT

640-010A **RIPRAP/EROSION CONTROL GEOTEXTILE**
32 SY STA. 5908+88.93, 91.39' RT

S913-05A **SP DITCH BERM**
4.9 CY STA. 5900+75, 87.45' RT
4.9 CY STA. 5903+50, 96.17' RT
4.9 CY STA. 5906+25, 90.03' RT

NOTES:

1. SEE SP DITCH BERM DETAIL FOR DITCH BERM DIMENSIONS.

2. IN PHASE 1, RETAIN AND PROTECT EXISTING CULVERTS. CONSTRUCT INLET OR JUNCTION BOX OVER EXISTING CULVERT, AND CONSTRUCT PROPOSED CULVERT UNDER PHASE 1 ROADWAY.

3. SEE PIPE COVER AND DAYLIGHT DETAILS FOR GRADING INFORMATION.

Scale (Feet)
50 0 50 100

NOT APPROVED FOR INTERMEDIATE CONSTRUCTION

REVISIONS				DESIGNED	SCALES SHOWN	IDAHO TRANSPORTATION DEPARTMENT	PROJECT NO.	DRAINAGE PLAN	ENGLISH
NO.	DATE	BY	DESCRIPTION	D. ABEDI	ARE FOR 11" X 17" PRINTS ONLY	YOUR Safety→YOUR Mobility→YOUR Economic Opportunity	A024(149)	US 20, BONNEVILLE COUNTY LINE TO MP 291 STA. 5899+00 TO STA. 5911+00 PHASE 1	COUNTY BINGHAM/BONNEVILLE
				DESIGN CHECKED C. MCALISTER					KEY NUMBER 24149
				DETAILED P. CONSALVO	CADD FILE NAME 24149_Drpl_D201A.DGN	DAVID EVANS AND ASSOCIATES INC.			SHEET 195 OF 441
				DRAWING CHECKED C. MCALISTER	DRAWING DATE: November 21, 2025				

November 21, 2025 4:46:29 PM
pw://itd-pw.bentley.com:itd-pw-01/Documents/District 6/Projects/prj24394/Project_Development/Plan Sheets/Package 2 (KN 24149)/Drainage/24149_Drpl_D201A

T.3N., R.33E., B.M.

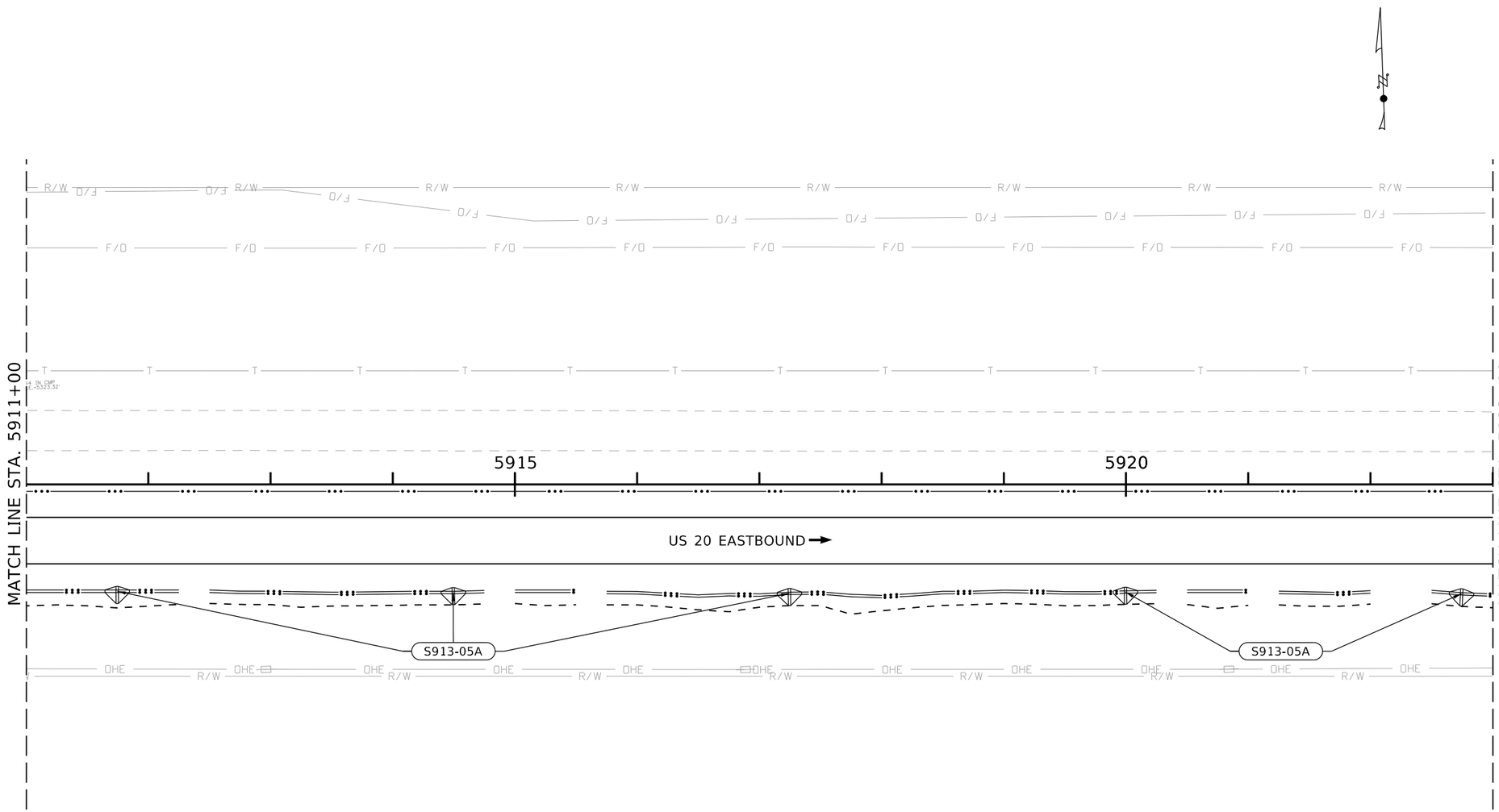

S913-05A	SP DITCH BERM
4.9 CY	STA. 5911+75, 87.45' RT
4.9 CY	STA. 5914+50, 88.48' RT
4.9 CY	STA. 5917+25, 89.21' RT
4.9 CY	STA. 5920+00, 88.12' RT
4.9 CY	STA. 5922+75, 89.52' RT

NOTES:

1. SEE SP DITCH BERM DETAIL FOR DITCH BERM DIMENSIONS.

Scale (Feet)
50 0 50 100

REVISIONS			
NO.	DATE	BY	DESCRIPTION

DESIGNED D. ABEDI
DESIGN CHECKED C. MCALISTER
DETAILED P. CONSALVO
DRAWING CHECKED C. MCALISTER

SCALES SHOWN ARE FOR 11" X 17" PRINTS ONLY
CADD FILE NAME 24149_DrpI_D201A.DGN
DRAWING DATE: November 21, 2025

IDAHO TRANSPORTATION DEPARTMENT
YOUR Safety→YOUR Mobility→YOUR Economic Opportunity
DAVID EVANS AND ASSOCIATES INC.

PROJECT NO. A024(149)

DRAINAGE PLAN
US 20, BONNEVILLE COUNTY
LINE TO MP 291
STA. 5911+00 TO STA. 5923+00
PHASE 1

ENGLISH
COUNTY BINGHAM/BONNEVILLE
KEY NUMBER 24149
SHEET 196 OF 441

NOT APPROVED
INTERMEDIATE
FOR CONSTRUCTION

November 21, 2025 4:46:31 PM
pw://itd-pw.bentley.com:itd-pw-01/Documents/District 6/Projects/prj24394/Project_Development/Plan Sheets/Package 2 (KN 24149)/Drainage/24149_DrpI_D201A

T.3N., R.33E., B.M.

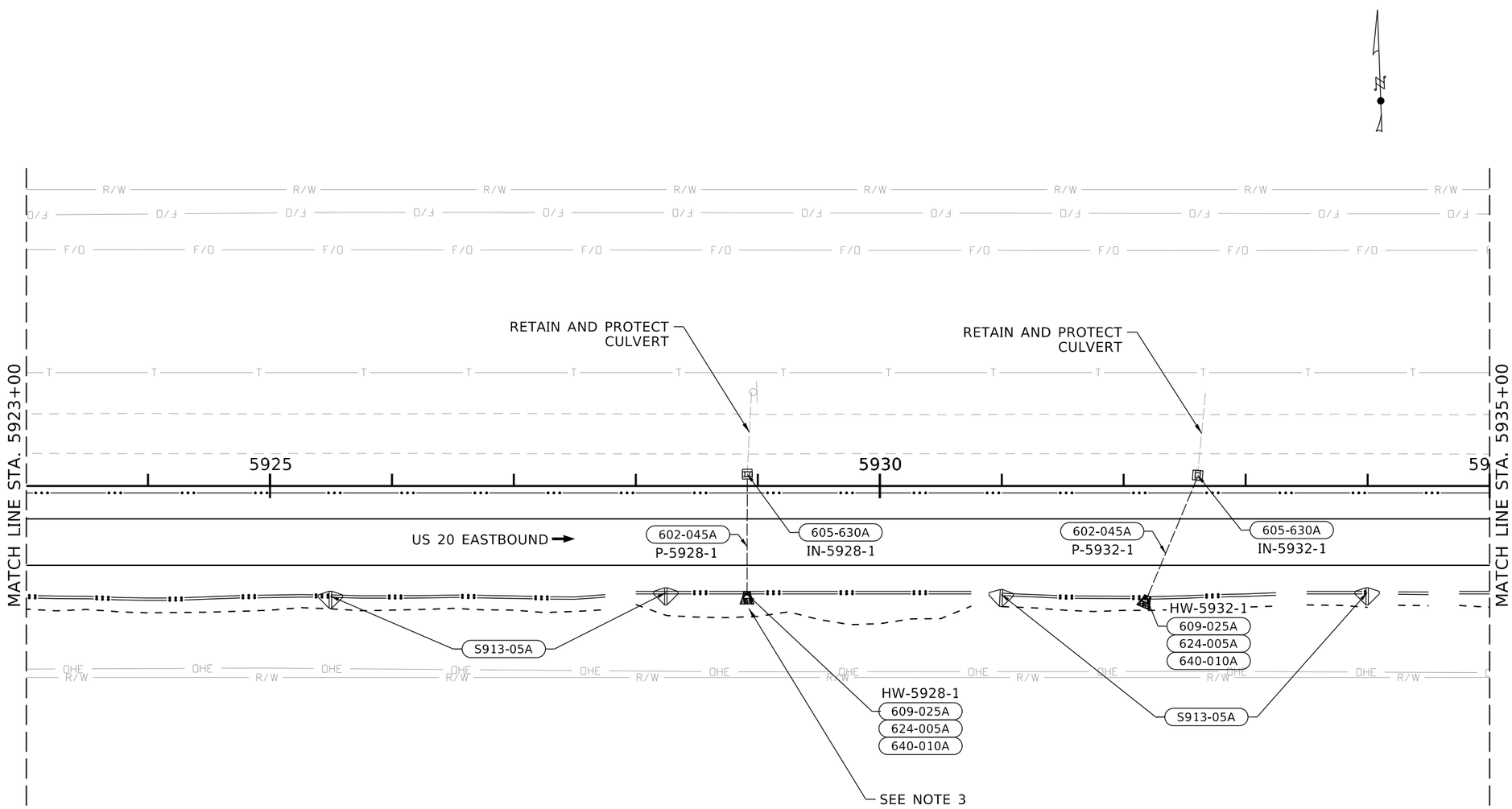

602-045A	**24" PIPE CULVERT**
98 FT	STA. 5928+91.16, 88.83' RT TO STA. 5928+91.34, 9.71' LT
108 FT	STA. 5932+19.02, 92.06' RT STA. 5932+60.57, 7.37' LT
605-630A	**INLET TYPE 8**
1 EACH	STA. 5928+91.34, 9.71' LT
1 EACH	STA. 5932+60.57, 7.37' LT
609-025A	**MINOR STRUCTURES (24" CONCRETE HEADWALL)**
1 EACH	STA. 5928+91.16, 88.83' RT
1 EACH	STA. 5932+19.02, 92.06' RT
624-005A	**LOOSE RIPRAP (CLASS I)**
4.7 CY	STA. 5928+91.16, 88.83' RT
4.7 CY	STA. 5932+19.02, 92.06' RT
640-010A	**RIPRAP/EROSION CONTROL GEOTEXTILE**
14 SY	STA. 5928+91.16, 88.83' RT
14 SY	STA. 5932+19.02, 92.06' RT
S913-05A	**SP DITCH BERM**
4.9 CY	STA. 5925+50, 90.28' RT
4.9 CY	STA. 5928+25, 87.45' RT
4.9 CY	STA. 5931+00, 88.85' RT
4.9 CY	STA. 5934+00, 87.45' RT

NOTES:

1. SEE SP DITCH BERM DETAIL FOR DITCH BERM DIMENSIONS.

2. IN PHASE 1, RETAIN AND PROTECT EXISTING CULVERTS. CONSTRUCT INLET OR JUNCTION BOX OVER EXISTING CULVERT, AND CONSTRUCT PROPOSED CULVERT UNDER PHASE 1 ROADWAY.

3. SEE PIPE COVER AND DAYLIGHT DETAILS FOR GRADING INFORMATION.

Scale (Feet)
50 0 50 100

REVISIONS			
NO.	DATE	BY	DESCRIPTION

DESIGNED D. ABEDI	SCALES SHOWN ARE FOR 11" X 17" PRINTS ONLY
DESIGN CHECKED C. MCALISTER	
DETAILED P. CONSALVO	CADD FILE NAME 24149_Drpl_D201A.DGN
DRAWING CHECKED C. MCALISTER	DRAWING DATE: November 21, 2025

IDAHO TRANSPORTATION DEPARTMENT
YOUR Safety→YOUR Mobility→YOUR Economic Opportunity
DAVID EVANS AND ASSOCIATES INC.

PROJECT NO.	DRAINAGE PLAN
A024(149)	US 20, BONNEVILLE COUNTY LINE TO MP 291 STA. 5923+00 TO STA. 5935+00 PHASE 1

ENGLISH

COUNTY BINGHAM/BONNEVILLE

KEY NUMBER 24149

SHEET 197 OF 441

NOT APPROVED FOR INTERMEDIATE CONSTRUCTION

November 21, 2025 4:46:33 PM
pw://itd-pw.bentley.com:itd-pw-01/Documents/District 6/Projects/prj24394/Project_Development/Plan Sheets/Package 2 (KN 24149)/Drainage/24149_Drpl_D201A

T.3N., R.33E., B.M.

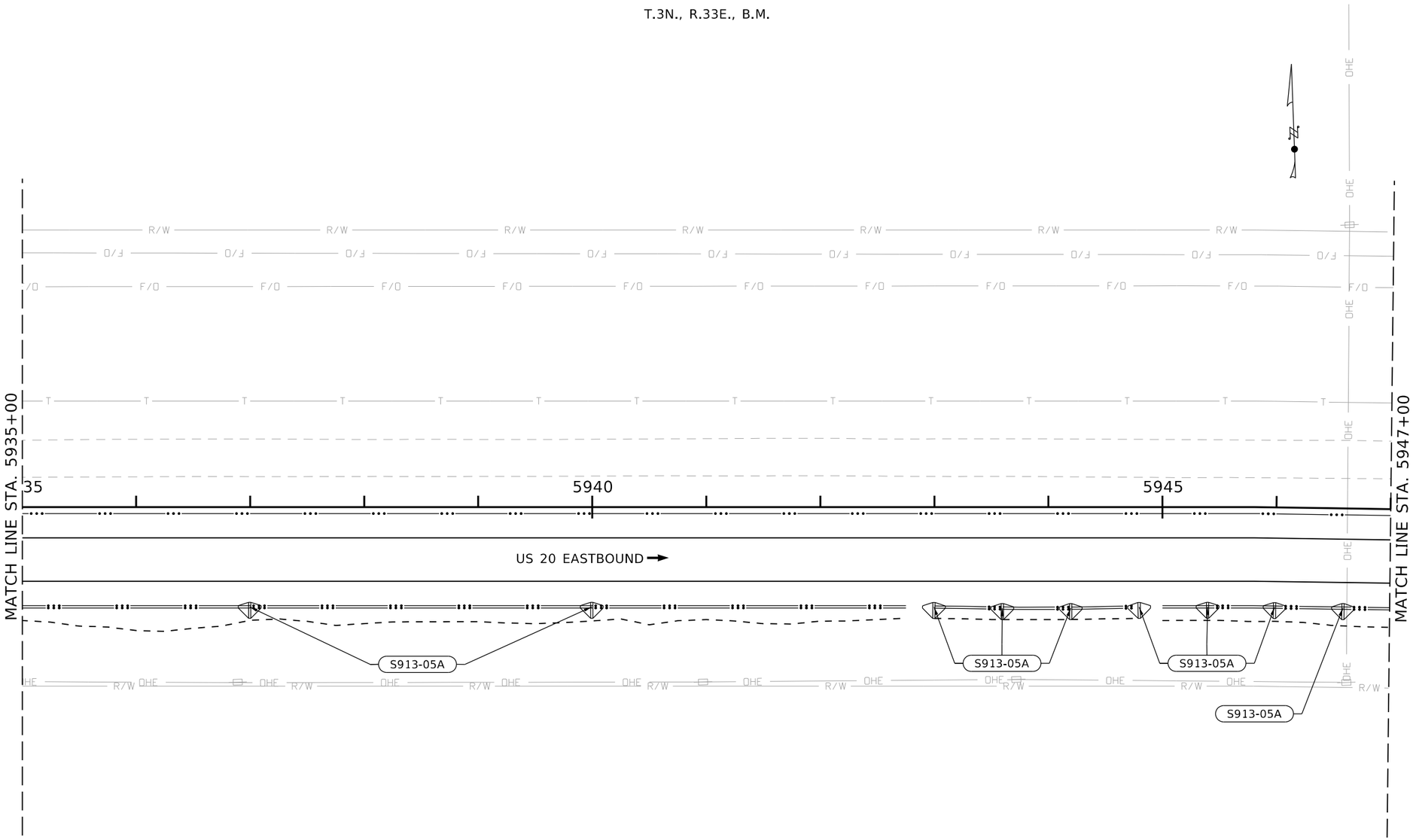

S913-05A	SP DITCH BERM
4.9 CY	STA. 5937+00, 87.45' RT
4.9 CY	STA. 5940+00, 87.45' RT
4.9 CY	STA. 5943+00, 87.62' RT
4.9 CY	STA. 5943+60, 88.56' RT
4.9 CY	STA. 5944+20, 88.65' RT
4.9 CY	STA. 5944+80, 87.58' RT
4.9 CY	STA. 5945+40, 87.45' RT
4.9 CY	STA. 5946+00, 87.45' RT
4.9 CY	STA. 5946+60, 87.45' RT

NOTES:

1. SEE SP DITCH BERM DETAIL FOR DITCH BERM DIMENSIONS.

Scale (Feet)
50 0 50 100

REVISIONS			
NO.	DATE	BY	DESCRIPTION

DESIGNED D. ABEDI
DESIGN CHECKED C. MCALISTER
DETAILED P. CONSALVO
DRAWING CHECKED C. MCALISTER

SCALES SHOWN ARE FOR 11" X 17" PRINTS ONLY
CADD FILE NAME 24149_Drpl_D201A.DGN
DRAWING DATE: November 21, 2025

IDAHO TRANSPORTATION DEPARTMENT
YOUR Safety→YOUR Mobility→YOUR Economic Opportunity
DAVID EVANS AND ASSOCIATES INC.

PROJECT NO.
A024(149)

DRAINAGE PLAN
US 20, BONNEVILLE COUNTY
LINE TO MP 291
STA. 5935+00 TO STA. 5947+00
PHASE 1

ENGLISH
COUNTY BINGHAM/BONNEVILLE
KEY NUMBER 24149
SHEET 198 OF 441

NOT APPROVED
INTERMEDIATE
FOR CONSTRUCTION

November 21, 2025 4:46:35 PM
pw://itd-pw.bentley.com:itd-pw-01/Documents/District 6/Projects/prj24394/Project_Development/Plan Sheets/Package 2 (KN 24149)/Drainage/24149_Drpl_D201A

T.3N., R.33E., B.M.

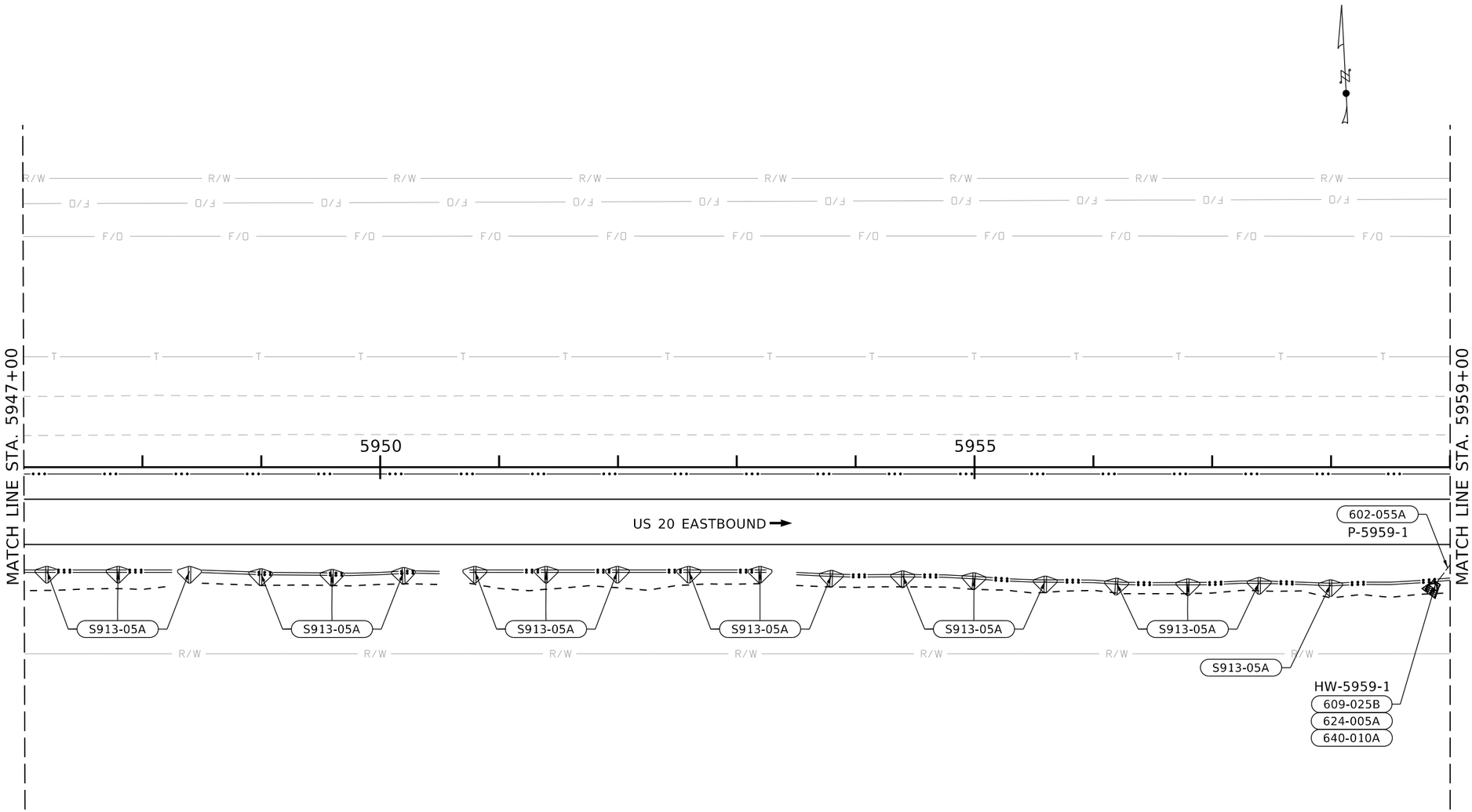

602-055A	**30" PIPE CULVERT**
19 FT	STA. 5958+87.95, 98.32' RT TO STA. 5959+00.00, 82.06' RT
609-025B	**MINOR STRUCTURES (30" CONCRETE HEADWALL)**
1 EACH	STA. 5958+87.95, 98.32' RT
624-005A	**LOOSE RIPRAP (CLASS I)**
7.3 CY	STA. 5958+87.95, 98.32' RT
640-010A	**RIPRAP/EROSION CONTROL GEOTEXTILE**
19 SY	STA. 5958+87.95, 98.32' RT
S913-05A	**SP DITCH BERM**
4.9 CY	STA. 5947+20, 87.45' RT
4.9 CY	STA. 5947+80, 87.45' RT
4.9 CY	STA. 5948+40, 87.55' RT
4.9 CY	STA. 5949+00, 89.42' RT
4.9 CY	STA. 5949+60, 89.99' RT
4.9 CY	STA. 5950+20, 88.44' RT
4.9 CY	STA. 5950+80, 87.45' RT
4.9 CY	STA. 5951+40, 87.45' RT
4.9 CY	STA. 5952+00, 87.45' RT
4.9 CY	STA. 5952+60, 87.45' RT
4.9 CY	STA. 5953+20, 87.45' RT
4.9 CY	STA. 5953+80, 90.84' RT
4.9 CY	STA. 5954+40, 91.31' RT
4.9 CY	STA. 5955+00, 92.86' RT
4.9 CY	STA. 5955+60, 95.74' RT
4.9 CY	STA. 5956+20, 97.40' RT
4.9 CY	STA. 5956+80, 97.96' RT
4.9 CY	STA. 5957+40, 96.84' RT
4.9 CY	STA. 5958+00, 98.70' RT

NOTES:

1. SEE SP DITCH BERM DETAIL FOR DITCH BERM DIMENSIONS.

2. IN PHASE 1, RETAIN AND PROTECT EXISTING CULVERTS. CONSTRUCT INLET OR JUNCTION BOX OVER EXISTING CULVERT, AND CONSTRUCT PROPOSED CULVERT UNDER PHASE 1 ROADWAY.

3. SEE PIPE COVER AND DAYLIGHT DETAILS FOR GRADING INFORMATION.

Scale (Feet)
50 0 50 100

REVISIONS			
NO.	DATE	BY	DESCRIPTION

DESIGNED D. ABEDI	SCALES SHOWN ARE FOR 11" X 17" PRINTS ONLY
DESIGN CHECKED C. MCALISTER	
DETAILED P. CONSALVO	CADD FILE NAME 24149_DrpI_D201A.DGN
DRAWING CHECKED C. MCALISTER	DRAWING DATE: November 21, 2025

IDAHO TRANSPORTATION DEPARTMENT
YOUR Safety→YOUR Mobility→YOUR Economic Opportunity
DAVID EVANS AND ASSOCIATES INC.

PROJECT NO.	DRAINAGE PLAN
A024(149)	US 20, BONNEVILLE COUNTY LINE TO MP 291 STA. 5947+00 TO STA. 5959+00 PHASE 1

ENGLISH

COUNTY BINGHAM/BONNEVILLE

KEY NUMBER 24149

SHEET 199 OF 441

NOT APPROVED
INTERMEDIATE
FOR CONSTRUCTION

November 21, 2025 4:46:37 PM
pw://itd-pw.bentley.com:itd-pw-01/Documents/District 6/Projects/prj24394/Project_Development/Plan Sheets/Package 2 (KN 24149)/Drainage/24149_DrpI_D201A

T.3N., R.33E., B.M.

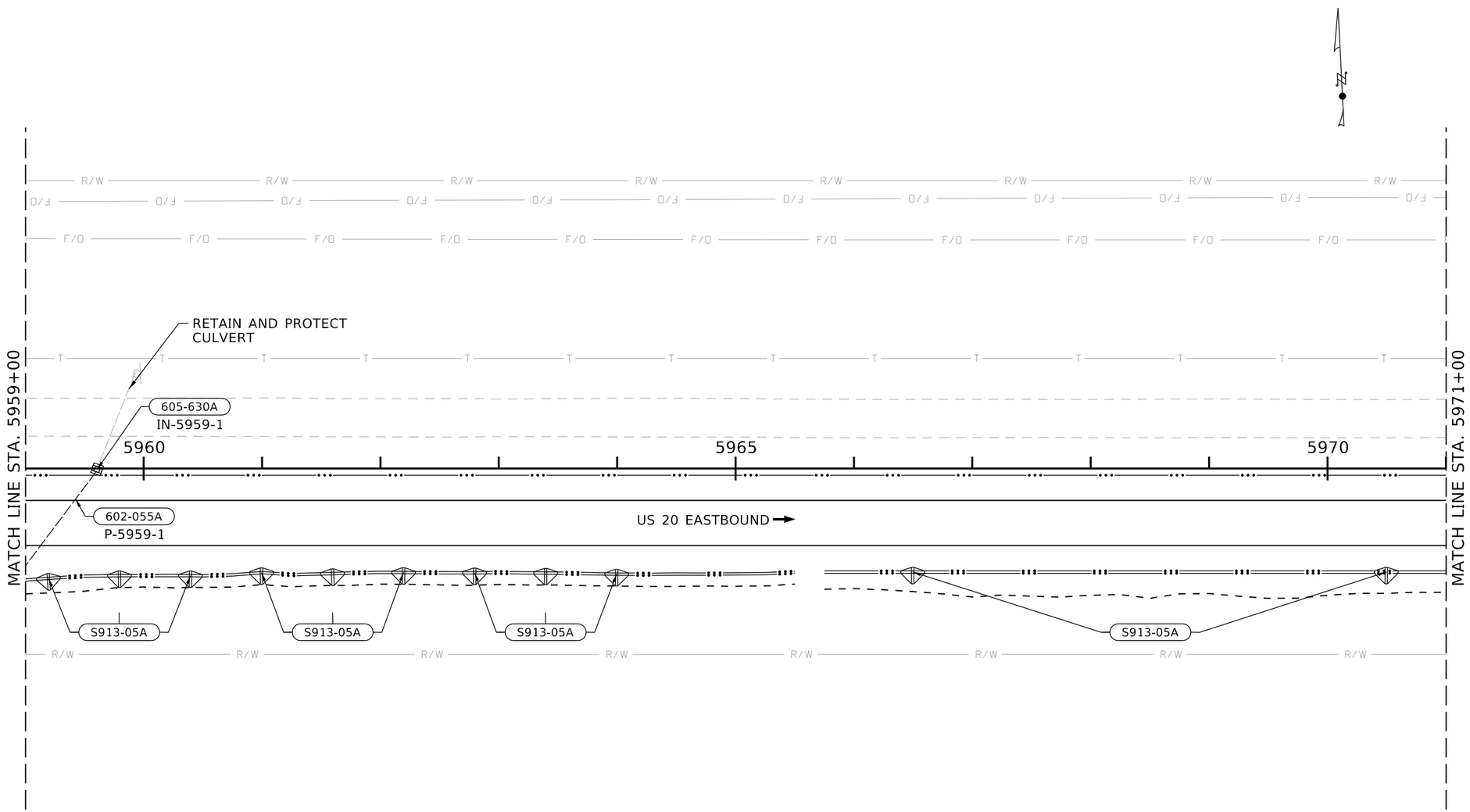

602-055A	**30" PIPE CULVERT**
102 FT	STA. 5959+00.00, 82.06' RT TO STA. 5959+60.63, 0.65' RT
605-630A	**INLET TYPE 8**
1 EACH	STA. 5959+60.63, 0.65' RT
S913-05A	**SP DITCH BERM**
4.9 CY	STA. 5959+20, 92.77' RT
4.9 CY	STA. 5959+80, 90.50' RT
4.9 CY	STA. 5960+40, 90.51' RT
4.9 CY	STA. 5961+00, 87.96' RT
4.9 CY	STA. 5961+60, 88.76' RT
4.9 CY	STA. 5962+20, 87.80' RT
4.9 CY	STA. 5962+80, 88.06' RT
4.9 CY	STA. 5963+40, 88.30' RT
4.9 CY	STA. 5964+00, 89.19' RT
4.9 CY	STA. 5966+50, 87.45' RT
4.9 CY	STA. 5970+50, 87.45' RT

NOTES:

1. SEE SP DITCH BERM DETAIL FOR DITCH BERM DIMENSIONS.
2. IN PHASE 1, RETAIN AND PROTECT EXISTING CULVERTS. CONSTRUCT INLET OR JUNCTION BOX OVER EXISTING CULVERT, AND CONSTRUCT PROPOSED CULVERT UNDER PHASE 1 ROADWAY.
3. SEE PIPE COVER AND DAYLIGHT DETAILS FOR GRADING INFORMATION.

Scale (Feet)
50 0 50 100

REVISIONS			
NO.	DATE	BY	DESCRIPTION

DESIGNED D. ABEDI	SCALES SHOWN ARE FOR 11" X 17" PRINTS ONLY
DESIGN CHECKED C. MCALISTER	
DETAILED P. CONSALVO	CADD FILE NAME 24149_DrpI_D201A.DGN
DRAWING CHECKED C. MCALISTER	DRAWING DATE: November 21, 2025

IDAHO TRANSPORTATION DEPARTMENT
YOUR Safety→YOUR Mobility→YOUR Economic Opportunity
DAVID EVANS AND ASSOCIATES INC.

PROJECT NO.	DRAINAGE PLAN
A024(149)	US 20, BONNEVILLE COUNTY LINE TO MP 291 STA. 5959+00 TO STA. 5971+00 PHASE 1

ENGLISH

COUNTY BINGHAM/BONNEVILLE

KEY NUMBER 24149

SHEET 200 OF 441

NOT APPROVED
INTERMEDIATE
FOR CONSTRUCTION

November 21, 2025 4:46:40 PM
pw://itd-pw.bentley.com:itd-pw-01/Documents/District 6/Projects/prj24394/Project_Development/Plan Sheets/Package 2 (KN 24149)/Drainage/24149_DrpI_D201A

T.3N., R.33E., B.M.

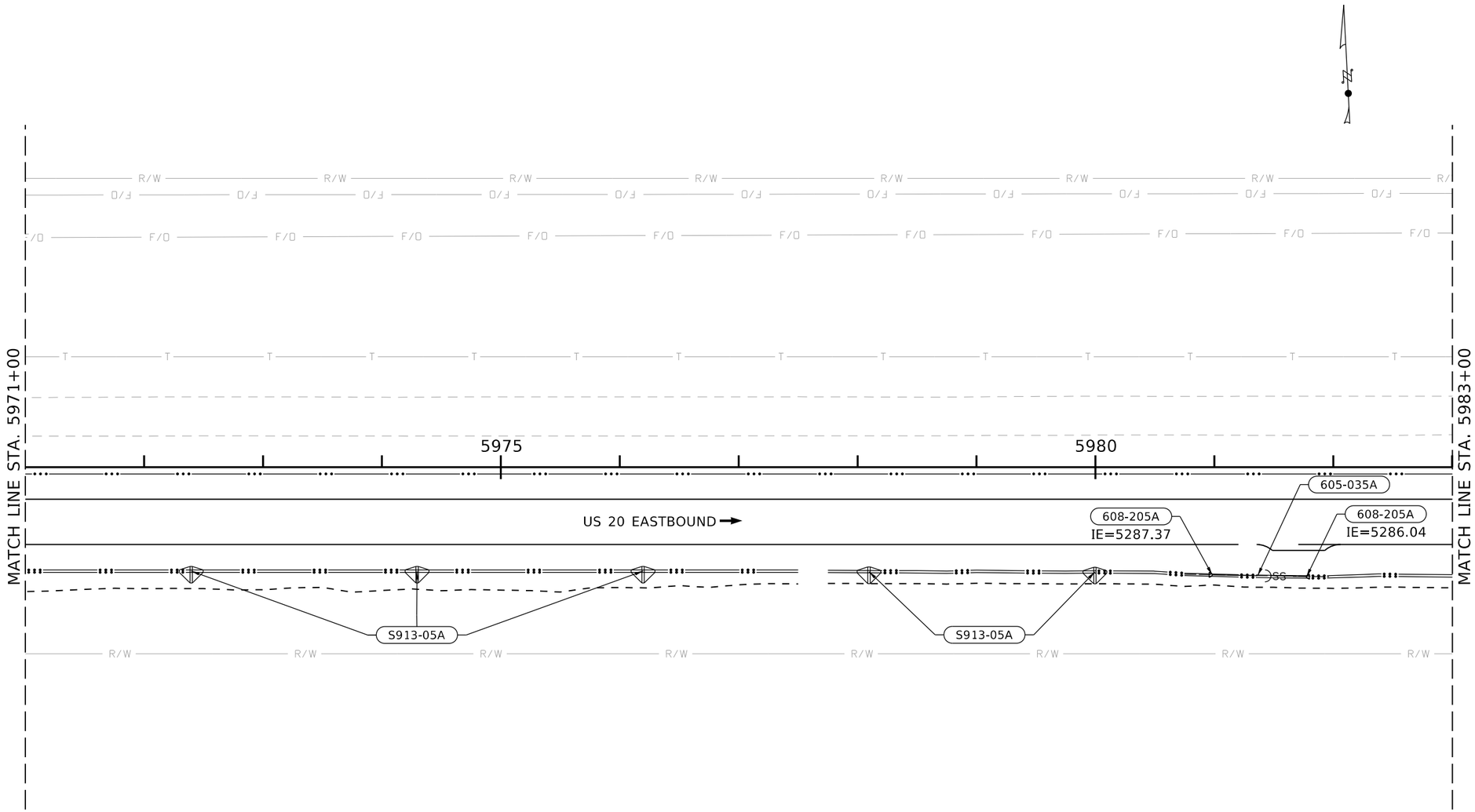

605-035A	**18" STORM SEWER PIPE**
80 FT	STA. 5980+98.20, 90.62' RT TO STA. 5981+77.46, 92.09' RT
608-205A	**METAL SAFETY APRON (PARALLEL) (18")**
1 EACH	STA. 5980+98.20, 90.62' RT
1 EACH	STA. 5981+77.46, 92.09' RT
S913-05A	**SP DITCH BERM**
4.9 CY	STA. 5972+40, 87.45' RT
4.9 CY	STA. 5974+30, 87.45' RT
4.9 CY	STA. 5976+20, 87.45' RT
4.9 CY	STA. 5978+10, 87.90' RT
4.9 CY	STA. 5980+00, 88.13' RT

NOTES:

1. SEE SP DITCH BERM DETAIL FOR DITCH BERM DIMENSIONS.

2. IN PHASE 1, RETAIN AND PROTECT EXISTING CULVERTS. CONSTRUCT INLET OR JUNCTION BOX OVER EXISTING CULVERT, AND CONSTRUCT PROPOSED CULVERT UNDER PHASE 1 ROADWAY.

3. SEE PIPE COVER AND DAYLIGHT DETAILS FOR GRADING INFORMATION.

Scale (Feet)
50 0 50 100

NOT APPROVED
INTERMEDIATE
FOR CONSTRUCTION

REVISIONS			
NO.	DATE	BY	DESCRIPTION

DESIGNED D. ABEDI	SCALES SHOWN ARE FOR 11" X 17" PRINTS ONLY
DESIGN CHECKED C. MCALISTER	
DETAILED P. CONSALVO	CADD FILE NAME 24149_DrpI_D201A.DGN
DRAWING CHECKED C. MCALISTER	DRAWING DATE: November 21, 2025

IDAHO TRANSPORTATION DEPARTMENT
YOUR Safety→YOUR Mobility→YOUR Economic Opportunity
DAVID EVANS AND ASSOCIATES INC.

PROJECT NO.	DRAINAGE PLAN	ENGLISH
A024(149)	US 20, BONNEVILLE COUNTY LINE TO MP 291 STA. 5971+00 TO STA. 5983+00 PHASE 1	COUNTY BINGHAM/BONNEVILLE KEY NUMBER 24149 SHEET 201 OF 441

November 21, 2025 4:46:42 PM
pw://itd-pw.bentley.com:itd-pw-01/Documents/District 6/Projects/prj24394/Project_Development/Plan Sheets/Package 2 (KN 24149)/Drainage/24149_DrpI_D201A

T.3N., R.33E., B.M.

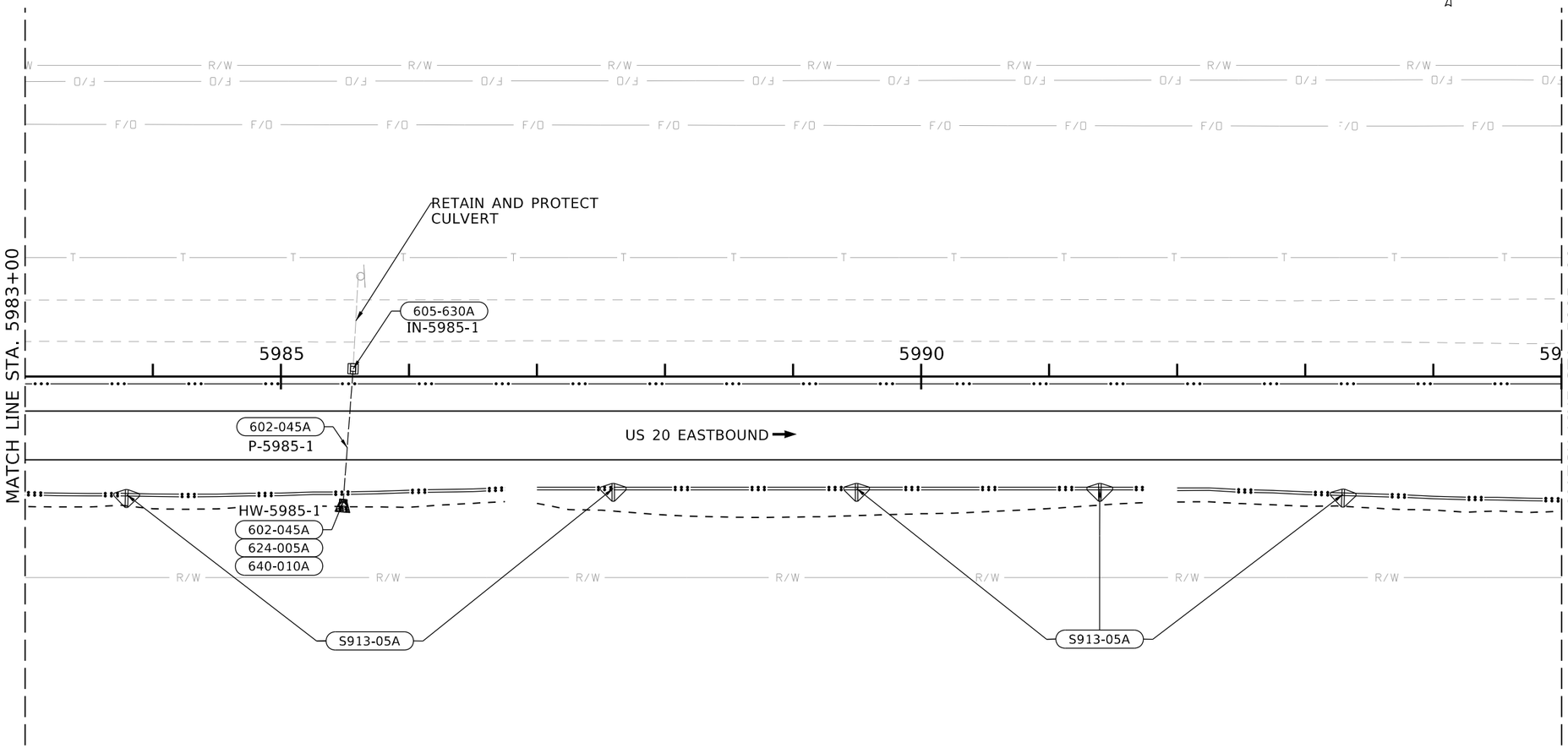

602-045A	**24" PIPE CULVERT**
103 FT	STA. 5985+48.66, 97.86' RT TO STA. 5985+56.37, 6.03' LT
605-630A	**INLET TYPE 8**
1 EACH	STA. 5985+56.37, 6.03' LT
609-025A	**MINOR STRUCTURES (24" CONCRETE HEADWALL)**
1 EACH	STA. 5985+48.66, 97.86' RT
624-005A	**LOOSE RIPRAP (CLASS I)**
4.7 CY	STA. 5985+48.66, 97.86' RT
640-010A	**RIPRAP/EROSION CONTROL GEOTEXTILE**
14 SY	STA. 5985+48.66, 97.86' RT
S913-05A	**SP DITCH BERM**
4.9 CY	STA. 5983+80, 92.30' RT
4.9 CY	STA. 5987+60, 87.45' RT
4.9 CY	STA. 5989+50, 87.45' RT
4.9 CY	STA. 5991+40, 87.45' RT
4.9 CY	STA. 5993+30, 91.94' RT

NOTES:

1. SEE SP DITCH BERM DETAIL FOR DITCH BERM DIMENSIONS.

2. IN PHASE 1, RETAIN AND PROTECT EXISTING CULVERTS. CONSTRUCT INLET OR JUNCTION BOX OVER EXISTING CULVERT, AND CONSTRUCT PROPOSED CULVERT UNDER PHASE 1 ROADWAY.

3. SEE PIPE COVER AND DAYLIGHT DETAILS FOR GRADING INFORMATION.

Scale (Feet)

50 0 50 100

REVISIONS			
NO.	DATE	BY	DESCRIPTION

DESIGNED D. ABEDI	SCALES SHOWN ARE FOR 11" X 17" PRINTS ONLY
DESIGN CHECKED C. MCALISTER	
DETAILED P. CONSALVO	CADD FILE NAME 24149_DrpI_D201A.DGN
DRAWING CHECKED C. MCALISTER	DRAWING DATE: November 21, 2025

IDAHO TRANSPORTATION DEPARTMENT
YOUR Safety→YOUR Mobility→YOUR Economic Opportunity
DAVID EVANS AND ASSOCIATES INC.

PROJECT NO.	DRAINAGE PLAN
A024(149)	US 20, BONNEVILLE COUNTY LINE TO MP 291 STA. 5983+00 TO STA. 5995+00 PHASE 1

ENGLISH

COUNTY BINGHAM/BONNEVILLE

KEY NUMBER 24149

SHEET 202 OF 441

NOT APPROVED FOR INTERMEDIATE CONSTRUCTION

November 21, 2025 4:46:44 PM
pw://itd-pw.bentley.com:itd-pw-01/Documents/District 6/Projects/prj24394/Project_Development/Plan Sheets/Package 2 (KN 24149)/Drainage/24149_DrpI_D201A

T.3N., R.34E., B.M.

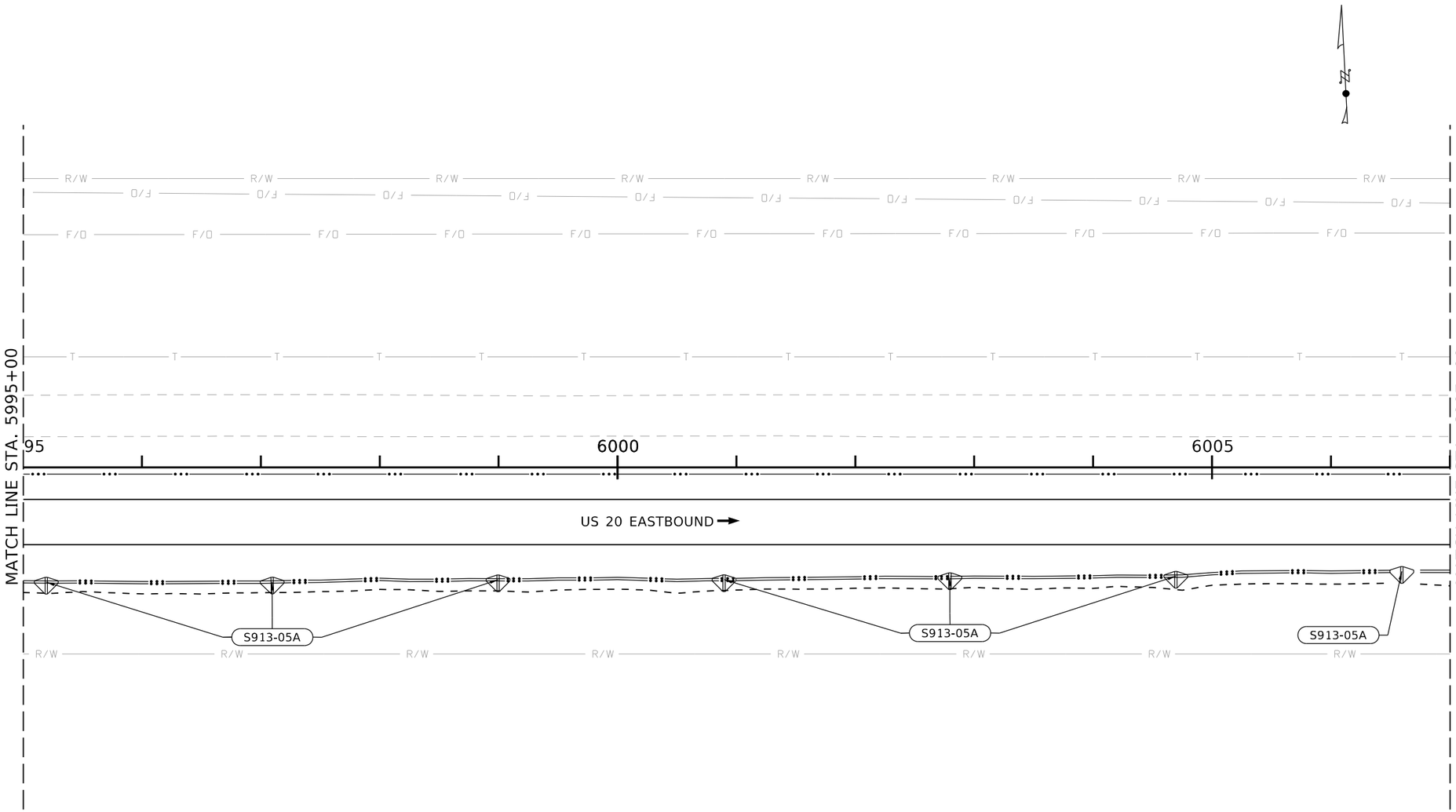

S913-05A	SP DITCH BERM
4.9 CY	STA. 5995+20, 96.49' RT
4.9 CY	STA. 5997+10, 96.44' RT
4.9 CY	STA. 5999+00, 94.56' RT
4.9 CY	STA. 6000+90, 94.39' RT
4.9 CY	STA. 6002+80, 92.74' RT
4.9 CY	STA. 6004+70, 91.51' RT
4.9 CY	STA. 6006+60, 87.47' RT

NOTES:

1. SEE SP DITCH BERM DETAIL FOR DITCH BERM DIMENSIONS.

2. IN PHASE 1, RETAIN AND PROTECT EXISTING CULVERTS. CONSTRUCT INLET OR JUNCTION BOX OVER EXISTING CULVERT, AND CONSTRUCT PROPOSED CULVERT UNDER PHASE 1 ROADWAY.

3. SEE PIPE COVER AND DAYLIGHT DETAILS FOR GRADING INFORMATION.

Scale (Feet)
50 0 50 100

NOT APPROVED FOR CONSTRUCTION
INTERMEDIATE

REVISIONS			
NO.	DATE	BY	DESCRIPTION

DESIGNED D. ABEDI
DESIGN CHECKED C. MCALISTER
DETAILED P. CONSALVO
DRAWING CHECKED C. MCALISTER

SCALES SHOWN ARE FOR 11" X 17" PRINTS ONLY
CADD FILE NAME 24149_DrpI_D201A.DGN
DRAWING DATE: November 21, 2025

IDAHO TRANSPORTATION DEPARTMENT
YOUR Safety→YOUR Mobility→YOUR Economic Opportunity
DAVID EVANS AND ASSOCIATES INC.

PROJECT NO. A024(149)

DRAINAGE PLAN
US 20, BONNEVILLE COUNTY
LINE TO MP 291
STA. 5995+00 TO STA. 6007+00
PHASE 1

ENGLISH
COUNTY BINGHAM/BONNEVILLE
KEY NUMBER 24149
SHEET 203 OF 441

November 21, 2025 4:46:46 PM
pw://itd-pw.bentley.com:itd-pw-01/Documents/District 6/Projects/prj24394/Project_Development/Plan Sheets/Package 2 (KN 24149)/Drainage/24149_DrpI_D201A

T.3N., R.34E., B.M.

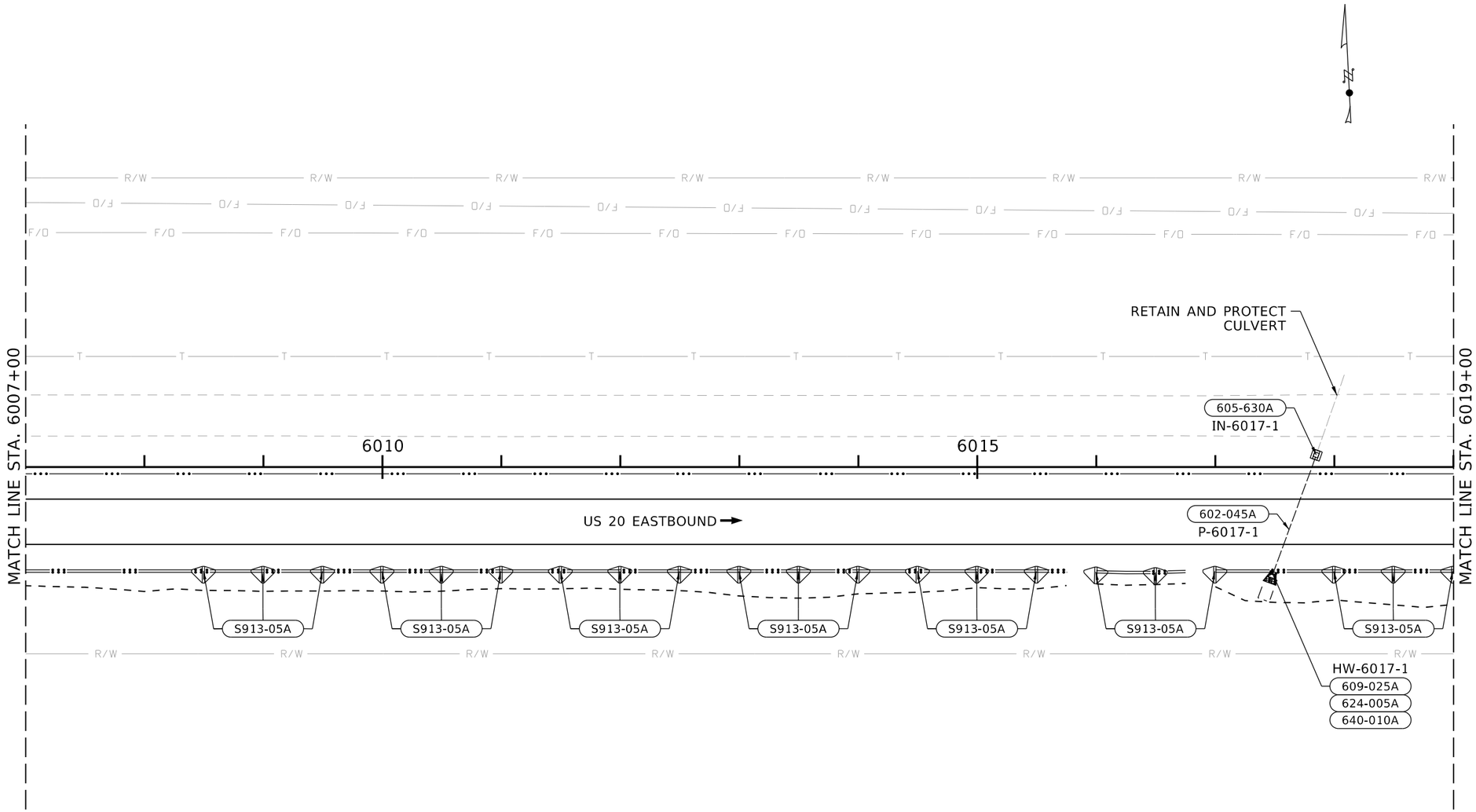

602-045A	**24" PIPE CULVERT**
105 FT	STA. 6017+48.35, 89.91' RT TO STA. 6017+84.78, 10.16' LT
605-630A	**INLET TYPE 8**
1 EACH	STA. 6017+84.80, 10.14' LT
609-025A	**MINOR STRUCTURES (24" CONCRETE HEADWALL)**
1 EACH	STA. 6017+48.35, 89.91' RT
624-005A	**LOOSE RIPRAP (CLASS I)**
4.7 CY	STA. 6017+48.35, 89.91' RT
640-010A	**RIPRAP/EROSION CONTROL GEOTEXTILE**
14 SY	STA. 6017+48.35, 89.91' RT
S913-05A	**SP DITCH BERM**
4.9 CY	STA. 6008+50, 87.45' RT
4.9 CY	STA. 6009+00, 87.45' RT
4.9 CY	STA. 6009+50, 87.45' RT
4.9 CY	STA. 6010+00, 87.45' RT
4.9 CY	STA. 6010+50, 87.45' RT
4.9 CY	STA. 6011+00, 87.45' RT
4.9 CY	STA. 6011+50, 87.45' RT
4.9 CY	STA. 6012+00, 87.45' RT
4.9 CY	STA. 6012+50, 87.45' RT
4.9 CY	STA. 6013+00, 87.45' RT
4.9 CY	STA. 6013+50, 87.45' RT
4.9 CY	STA. 6014+00, 87.45' RT
4.9 CY	STA. 6014+50, 87.45' RT
4.9 CY	STA. 6015+00, 87.45' RT
4.9 CY	STA. 6015+50, 87.45' RT
4.9 CY	STA. 6016+00, 88.06' RT
4.9 CY	STA. 6016+50, 88.57' RT
4.9 CY	STA. 6017+00, 87.45' RT
4.9 CY	STA. 6018+00, 87.45' RT
4.9 CY	STA. 6018+50, 87.45' RT
4.9 CY	STA. 6019+00, 87.45' RT

NOTES:

1. SEE SP DITCH BERM DETAIL FOR DITCH BERM DIMENSIONS.

2. IN PHASE 1, RETAIN AND PROTECT EXISTING CULVERTS. CONSTRUCT INLET OR JUNCTION BOX OVER EXISTING CULVERT, AND CONSTRUCT PROPOSED CULVERT UNDER PHASE 1 ROADWAY.

3. SEE PIPE COVER AND DAYLIGHT DETAILS FOR GRADING INFORMATION.

Scale (Feet)
50 0 50 100

REVISIONS			
NO.	DATE	BY	DESCRIPTION

DESIGNED D. ABEDI	SCALES SHOWN ARE FOR 11" X 17" PRINTS ONLY
DESIGN CHECKED C. MCALISTER	
DETAILED P. CONSALVO	CADD FILE NAME 24149_DrpI_D201A.DGN
DRAWING CHECKED C. MCALISTER	DRAWING DATE: November 21, 2025

IDAHO TRANSPORTATION DEPARTMENT
YOUR Safety→YOUR Mobility→YOUR Economic Opportunity
DAVID EVANS AND ASSOCIATES INC.

PROJECT NO.	DRAINAGE PLAN
A024(149)	US 20, BONNEVILLE COUNTY LINE TO MP 291 STA. 6007+00 TO STA. 6019+00 PHASE 1

ENGLISH

COUNTY BINGHAM/BONNEVILLE

KEY NUMBER 24149

SHEET 204 OF 441

NOT APPROVED FOR INTERMEDIATE CONSTRUCTION

November 21, 2025 4:46:48 PM
pw://itd-pw.bentley.com:itd-pw-01/Documents/District 6/Projects/prj24394/Project_Development/Plan Sheets/Package 2 (KN 24149)/Drainage/24149_DrpI_D201A

T.3N., R.34E., B.M.

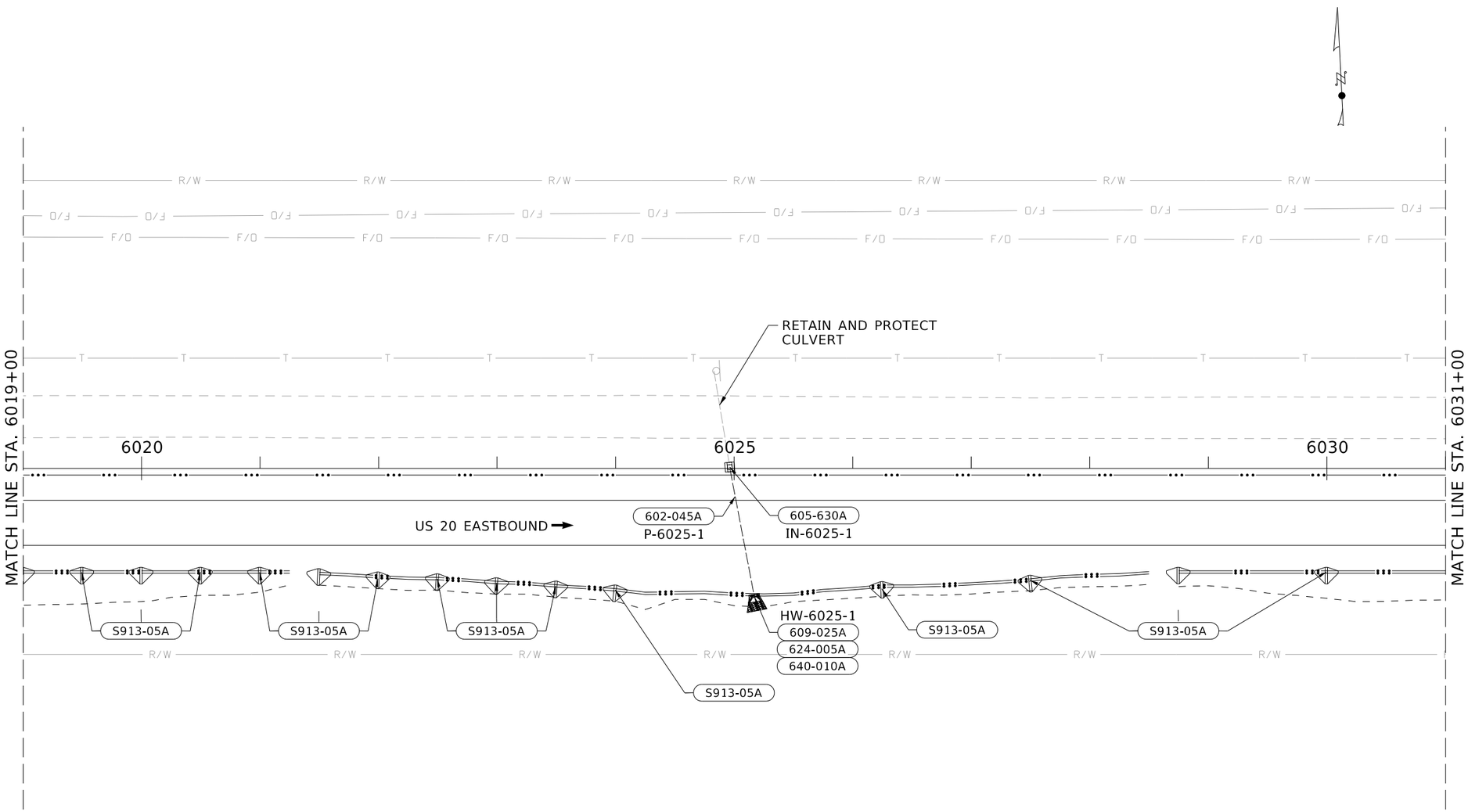

602-065A	**36" PIPE CULVERT**
110 FT	STA. 6024+96.30, 1.10' LT TO STA. 6025+17.02, 108.24' RT
605-630A	**INLET TYPE 8**
1 EACH	STA. 6024+96.30, 1.10' LT
609-025C	**MINOR STRUCTURES (36" CONCRETE HEADWALL)**
1 EACH	STA. 6025+17.02, 108.24' RT
624-005A	**LOOSE RIPRAP (CLASS I)**
10.4 CY	STA. 6025+17.02, 108.24' RT
640-010A	**RIPRAP/EROSION CONTROL GEOTEXTILE**
25 SY	STA. 6025+17.02, 108.24' RT
S913-05A	**SP DITCH BERM**
4.9 CY	STA. 6019+50, 87.45' RT
4.9 CY	STA. 6020+00, 87.45' RT
4.9 CY	STA. 6020+50, 87.45' RT
4.9 CY	STA. 6021+00, 87.45' RT
4.9 CY	STA. 6021+50, 88.67' RT
4.9 CY	STA. 6022+00, 91.44' RT
4.9 CY	STA. 6022+50, 93.00' RT
4.9 CY	STA. 6023+00, 96.30' RT
4.9 CY	STA, 6023+50, 99.14' RT
4.9 CY	STA. 6024+00, 102.41' RT
4.9 CY	STA. 6026+25, 99.47' RT
4.9 CY	STA, 6027+50, 94.25' RT
4.9 CY	STA, 6028+75, 87.45' RT
4.9 CY	STA. 6030+00, 87.45' RT

Scale (Feet)
50 0 50 100

REVISIONS			
NO.	DATE	BY	DESCRIPTION

DESIGNED D. ABEDI	SCALES SHOWN ARE FOR 11" X 17" PRINTS ONLY	IDAHO TRANSPORTATION DEPARTMENT YOUR Safety→YOUR Mobility→YOUR Economic Opportunity DAVID EVANS AND ASSOCIATES INC.
DESIGN CHECKED C. MCALISTER		
DETAILED P. CONSALVO	CADD FILE NAME 24149_DrpI_D201A.DGN	
DRAWING CHECKED C. MCALISTER	DRAWING DATE: November 21, 2025	

PROJECT NO.	DRAINAGE PLAN	ENGLISH
A024(149)	US 20, BONNEVILLE COUNTY LINE TO MP 291 STA. 6019+00 TO STA. 6031+00 PHASE 1	COUNTY BINGHAM/BONNEVILLE KEY NUMBER 24149 SHEET 205 OF 441

NOT APPROVED
INTERMEDIATE
FOR CONSTRUCTION

November 21, 2025 5:06:44 PM
pw://itd-pw.bentley.com:itd-pw-01/Documents/District 6/Projects/prj24394/Project_Development/Plan Sheets/Package 2 (KN 24149)/Drainage/24149_DrpI_D201A

T.3N., R.34E., B.M.

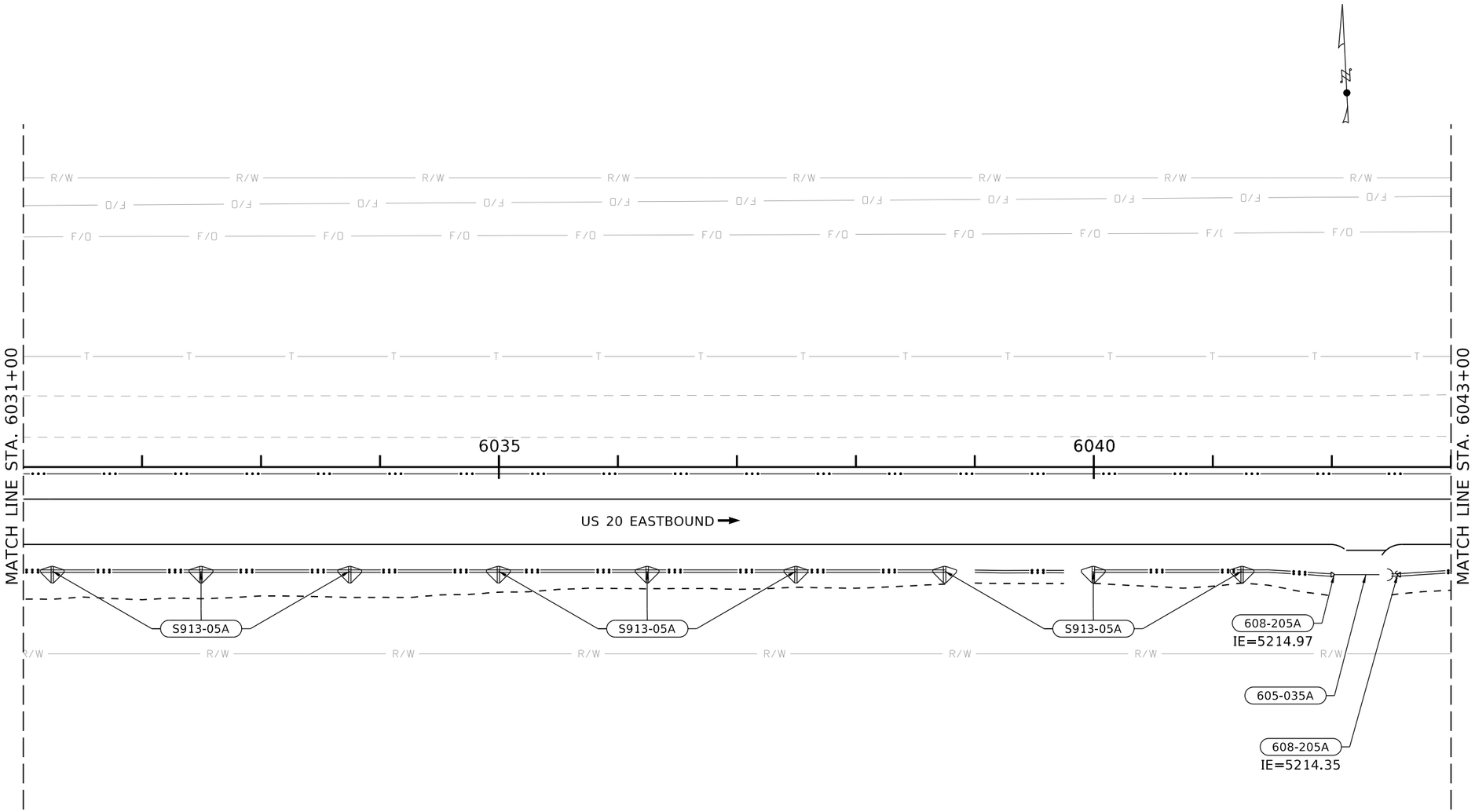

605-035A	**18" STORM SEWER PIPE**
54 FT	STA. 6042+01.97, 90.44' RT TO STA. 6042+55.29, 90.52' RT
608-205A	**METAL SAFETY APRON (PARALLEL) (18")**
1 EACH	STA. 6042+01.97, 90.44' RT
1 EACH	STA. 6042+55.29, 90.52' RT
S913-05A	**SP DITCH BERM**
4.9 CY	STA. 6031+25, 87.45' RT
4.9 CY	STA. 6032+50, 87.45' RT
4.9 CY	STA. 6033+75, 87.45' RT
4.9 CY	STA. 6035+00, 87.45' RT
4.9 CY	STA. 6036+25, 87.45' RT
4.9 CY	STA. 6037+50, 87.45' RT
4.9 CY	STA. 6038+75, 87.45' RT
4.9 CY	STA. 6040+00, 87.45' RT
4.9 CY	STA. 6041+25, 87.45' RT

NOTES:

1. SEE SP DITCH BERM DETAIL FOR DITCH BERM DIMENSIONS.
2. IN PHASE 1, RETAIN AND PROTECT EXISTING CULVERTS. CONSTRUCT INLET OR JUNCTION BOX OVER EXISTING CULVERT, AND CONSTRUCT PROPOSED CULVERT UNDER PHASE 1 ROADWAY.
3. SEE PIPE COVER AND DAYLIGHT DETAILS FOR GRADING INFORMATION.

Scale (Feet)
50 0 50 100

NOT APPROVED FOR CONSTRUCTION
INTERMEDIATE

REVISIONS			
NO.	DATE	BY	DESCRIPTION

DESIGNED D. ABEDI
DESIGN CHECKED C. MCALISTER
DETAILED P. CONSALVO
DRAWING CHECKED C. MCALISTER

SCALES SHOWN ARE FOR 11" X 17" PRINTS ONLY
CADD FILE NAME 24149_DrpI_D201B.DGN
DRAWING DATE: November 21, 2025

IDAHO TRANSPORTATION DEPARTMENT
YOUR Safety→YOUR Mobility→YOUR Economic Opportunity
DAVID EVANS AND ASSOCIATES INC.

PROJECT NO. A024(149)

DRAINAGE PLAN
US 20, BONNEVILLE COUNTY
LINE TO MP 291
STA. 6031+00 TO STA. 6043+00
PHASE 1

ENGLISH
COUNTY BINGHAM/BONNEVILLE
KEY NUMBER 24149
SHEET 206 OF 441

November 21, 2025 4:47:07 PM
pw://itd-pw.bentley.com:itd-pw-01/Documents/District 6/Projects/prj24394/Project_Development/Plan Sheets/Package 2 (KN 24149)/Drainage/24149_DrpI_D201B.dgn

T.3N., R.34E., B.M.

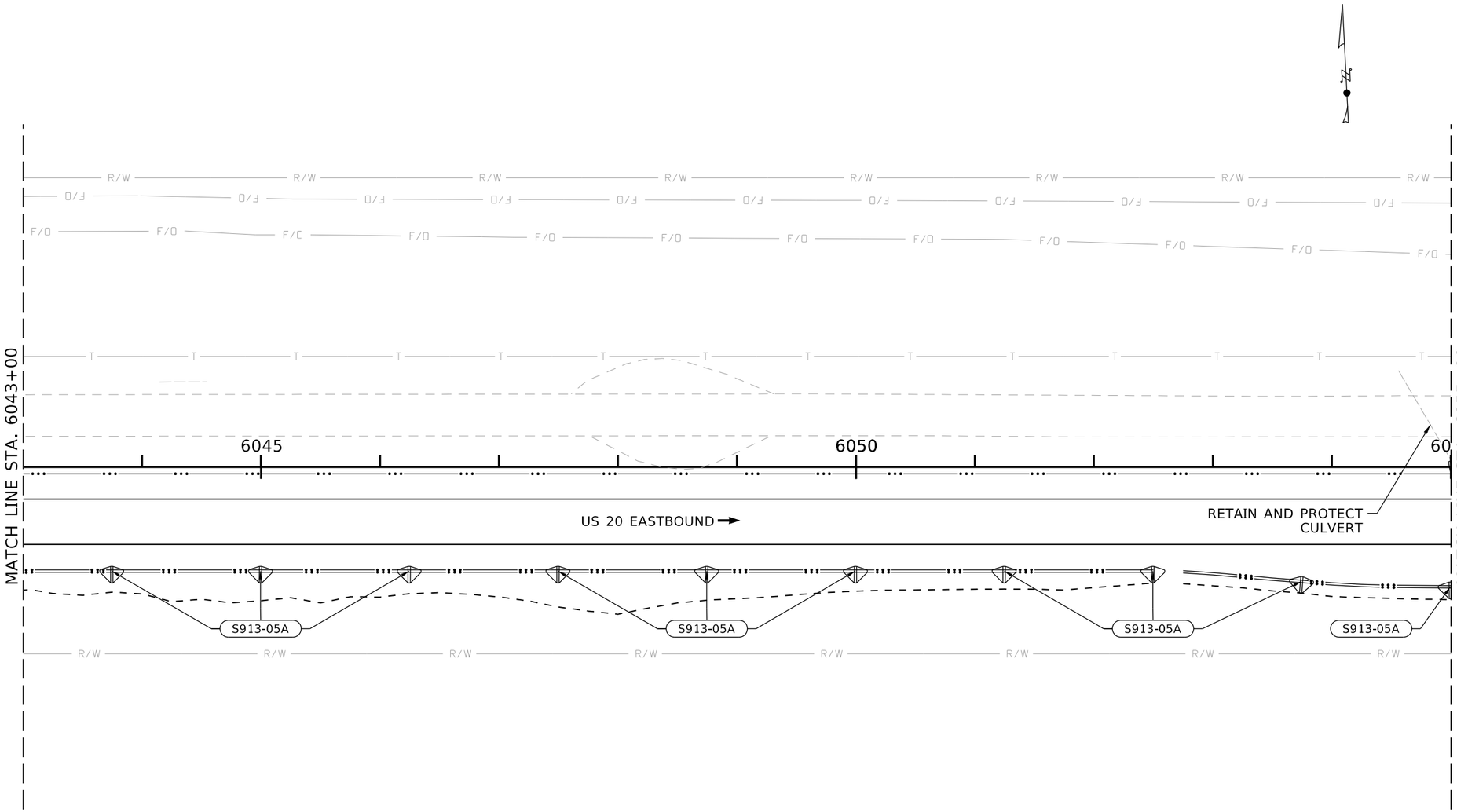

S913-05A	SP DITCH BERM
4.9 CY	STA. 6043+75, 87.45' RT
4.9 CY	STA. 6045+00, 87.45' RT
4.9 CY	STA. 6046+25, 87.45' RT
4.9 CY	STA. 6047+50, 87.45' RT
4.9 CY	STA. 6048+75, 87.45' RT
4.9 CY	STA. 6050+00, 87.45' RT
4.9 CY	STA. 6051+25, 87.45' RT
4.9 CY	STA. 6052+50, 87.45' RT
4.9 CY	STA. 6053+75, 96.19' RT
4.9 CY	STA. 6055+00, 100.72' RT

NOTES:

1. SEE SP DITCH BERM DETAIL FOR DITCH BERM DIMENSIONS.

Scale (Feet)
50 0 50 100

REVISIONS			
NO.	DATE	BY	DESCRIPTION

DESIGNED D. ABEDI
DESIGN CHECKED C. MCALISTER
DETAILED P. CONSALVO
DRAWING CHECKED C. MCALISTER

SCALES SHOWN ARE FOR 11" X 17" PRINTS ONLY
CADD FILE NAME 24149_DrpI_D201B.DGN
DRAWING DATE: November 21, 2025

IDAHO TRANSPORTATION DEPARTMENT
YOUR Safety→YOUR Mobility→YOUR Economic Opportunity
DAVID EVANS AND ASSOCIATES INC.

PROJECT NO.
A024(149)

DRAINAGE PLAN
US 20, BONNEVILLE COUNTY
LINE TO MP 291
STA. 6043+00 TO STA. 6055+00
PHASE 1

ENGLISH
COUNTY BINGHAM/BONNEVILLE
KEY NUMBER 24149
SHEET 207 OF 441

NOT APPROVED
INTERMEDIATE
FOR CONSTRUCTION

November 21, 2025 4:47:10 PM
pw://itd-pw.bentley.com:itd-pw-01/Documents/District 6/Projects/prj24394/Project_Development/Plan Sheets/Package 2 (KN 24149)/Drainage/24149_DrpI_D201B

T.3N., R.34E., B.M.

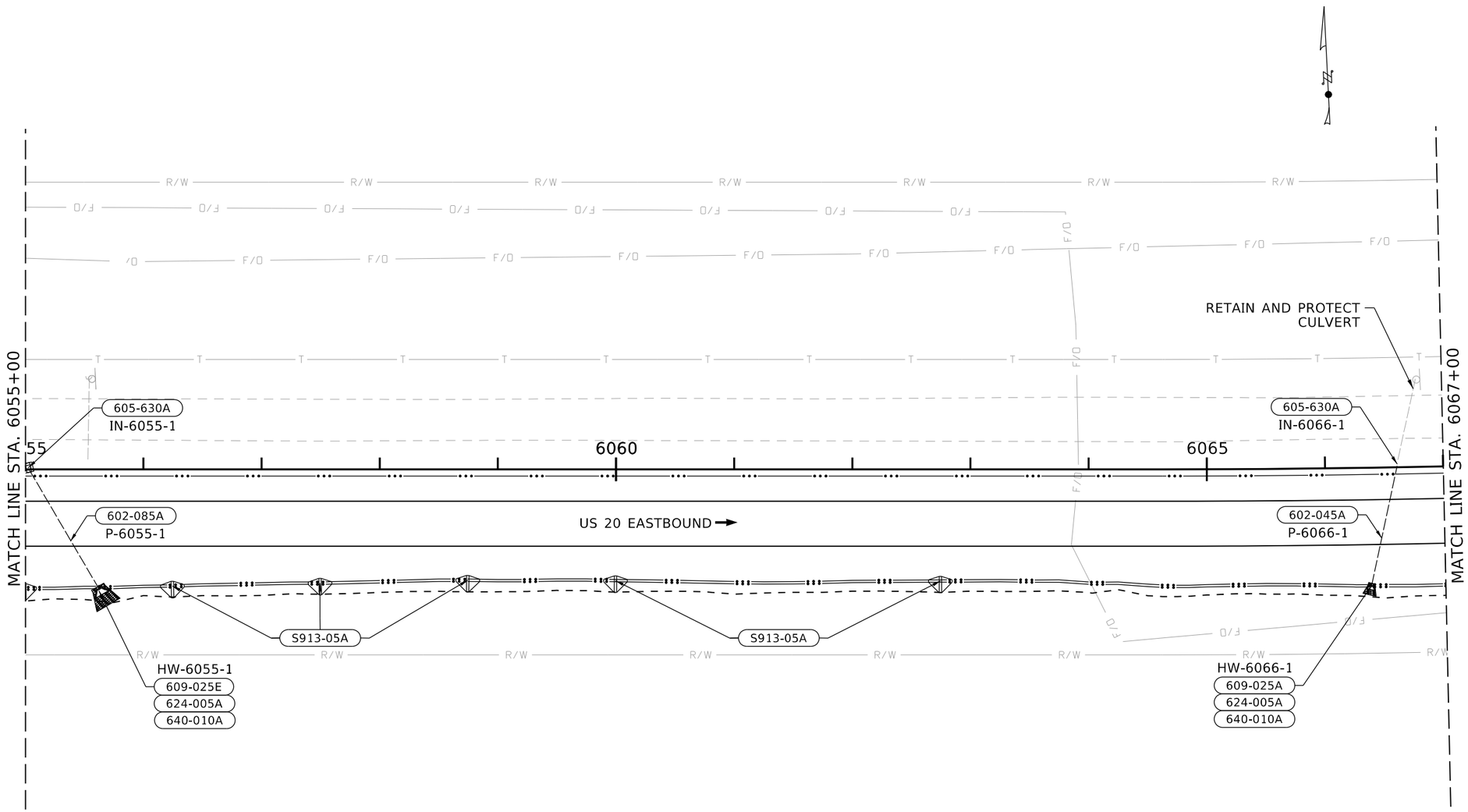

602-045A	**24" PIPE CULVERT**
104 FT	STA. 6066+37.99, 99.67' RT TO STA. 6066+61.19, 2.76' LT
602-085A	**48" PIPE CULVERT**
117 FT	STA. 6055+02.57, 1.45' LT TO STA. 6055+62.33, 100.97' RT
605-630A	**INLET TYPE 8**
1 EACH	STA. 6055+02.57, 1.45' LT
1 EACH	STA. 6066+61.19, 2.76' LT
609-025A	**MINOR STRUCTURES (24" CONCRETE HEADWALL)**
1 EACH	STA. 6066+37.99, 99.67' RT
609-025E	**MINOR STRUCTURES (48" CONCRETE HEADWALL)**
1 EACH	STA. 6055+62.33, 100.97' RT
624-005A	**LOOSE RIPRAP (CLASS I)**
18.5 CY	STA. 6055+62.33, 100.97' RT
4.7 CY	STA. 6066+37.99, 99.67' RT
640-010A	**RIPRAP/EROSION CONTROL GEOTEXTILE**
40 SY	STA. 6055+62.33, 100.97' RT
14 SY	STA. 6066+37.99, 99.67' RT
S913-05A	**SP DITCH BERM**
4.9 CY	STA. 6056+25, 98.74' RT
4.9 CY	STA. 6057+50, 96.29' RT
4.9 CY	STA. 6058+75, 93.82' RT
4.9 CY	STA. 6060+00, 94.14' RT
4.9 CY	STA. 6062+75, 94.51' RT

NOTES:

1. SEE SP DITCH BERM DETAIL FOR DITCH BERM DIMENSIONS.

2. IN PHASE 1, RETAIN AND PROTECT EXISTING CULVERTS. CONSTRUCT INLET OR JUNCTION BOX OVER EXISTING CULVERT, AND CONSTRUCT PROPOSED CULVERT UNDER PHASE 1 ROADWAY.

3. SEE PIPE COVER AND DAYLIGHT DETAILS FOR GRADING INFORMATION.

Scale (Feet)
50 0 50 100

REVISIONS			
NO.	DATE	BY	DESCRIPTION

DESIGNED D. ABEDI	SCALES SHOWN ARE FOR 11" X 17" PRINTS ONLY
DESIGN CHECKED C. MCALISTER	
DETAILED P. CONSALVO	CADD FILE NAME 24149_DrpI_D201B.DGN
DRAWING CHECKED C. MCALISTER	DRAWING DATE: November 21, 2025

IDAHO TRANSPORTATION DEPARTMENT
YOUR Safety→YOUR Mobility→YOUR Economic Opportunity
DAVID EVANS AND ASSOCIATES INC.

PROJECT NO.	DRAINAGE PLAN
A024(149)	US 20, BONNEVILLE COUNTY LINE TO MP 291 STA. 6055+00 TO STA. 6067+00 PHASE 1

ENGLISH

COUNTY BINGHAM/BONNEVILLE

KEY NUMBER 24149

SHEET 208 OF 441

NOT APPROVED
INTERMEDIATE
FOR CONSTRUCTION

November 21, 2025 4:47:11 PM
pw://itd-pw.bentley.com:itd-pw-01/Documents/District 6/Projects/prj24394/Project_Development/Plan Sheets/Package 2 (KN 24149)/Drainage/24149_DrpI_D201B

T.3N., R.34E., B.M.

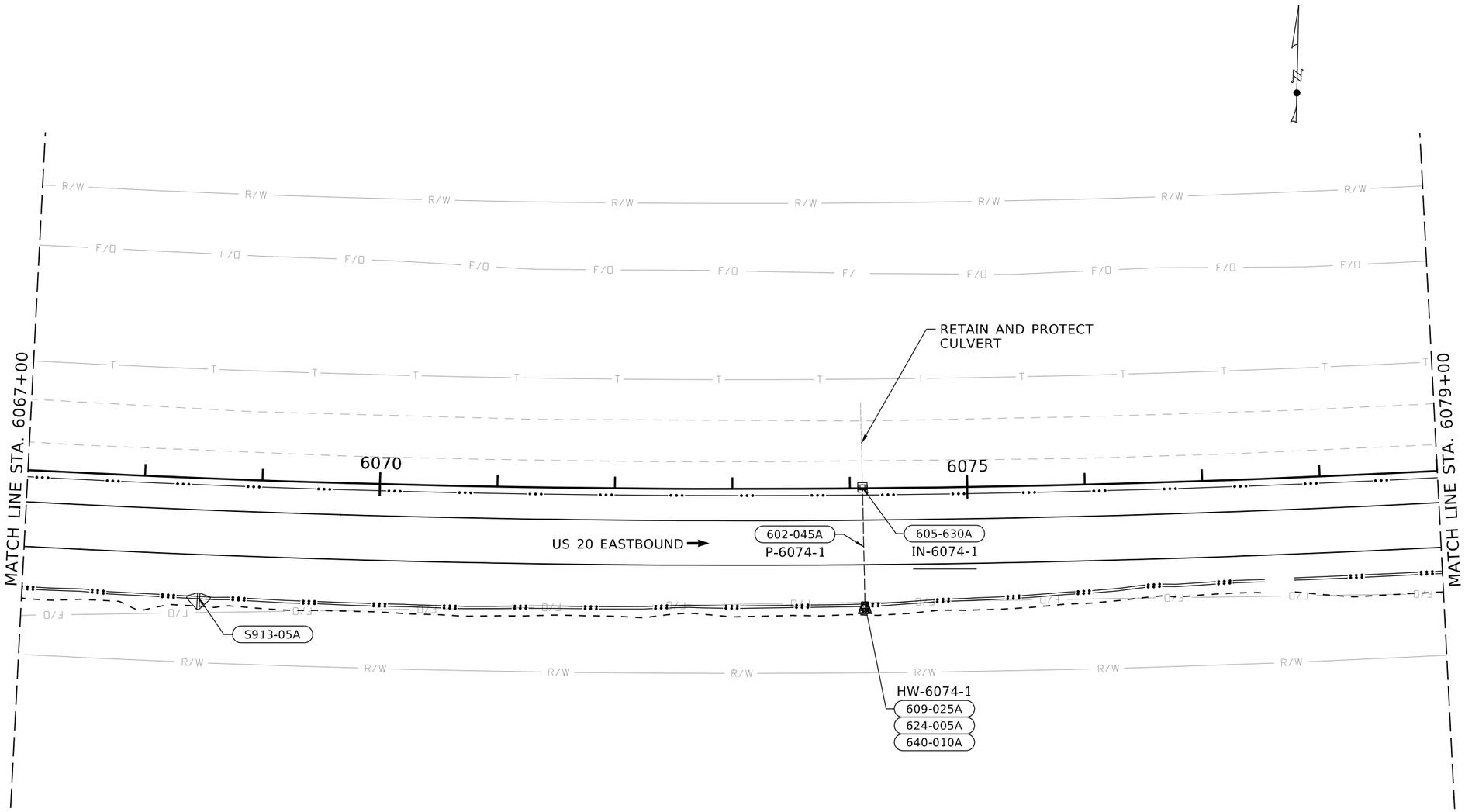

602-045A 98 FT	**24" PIPE CULVERT** STA. 6074+10.78, 0.85' LT TO STA. 6074+11.98, 98.56' RT
605-630A 1 EACH	**INLET TYPE 8** STA. 6074+10.78, 0.85' LT
609-025A 1 EACH	**MINOR STRUCTURES (24" CONCRETE HEADWALL)** STA. 6074+11.98, 98.56' RT
624-005A 4.7 CY	**LOOSE RIPRAP (CLASS I)** STA. 6074+11.98, 98.56' RT
640-010A 14 SY	**RIPRAP/EROSION CONTROL GEOTEXTILE** STA. 6074+11.98, 98.56' RT
S913-05A 4.9 CY	**SP DITCH BERM** STA. 6068+50, 101.71' RT

NOTES:

1. SEE SP DITCH BERM DETAIL FOR DITCH BERM DIMENSIONS.
2. IN PHASE 1, RETAIN AND PROTECT EXISTING CULVERTS. CONSTRUCT INLET OR JUNCTION BOX OVER EXISTING CULVERT, AND CONSTRUCT PROPOSED CULVERT UNDER PHASE 1 ROADWAY.
3. SEE PIPE COVER AND DAYLIGHT DETAILS FOR GRADING INFORMATION.

Scale (Feet)
50 0 50 100

REVISIONS			
NO.	DATE	BY	DESCRIPTION

DESIGNED D. ABEDI	SCALES SHOWN ARE FOR 11" X 17" PRINTS ONLY	IDAHO TRANSPORTATION DEPARTMENT YOUR Safety→YOUR Mobility→YOUR Economic Opportunity DAVID EVANS AND ASSOCIATES INC.
DESIGN CHECKED C. MCALISTER	CADD FILE NAME 24149_DrpI_D201B.DGN	
DETAILED P. CONSALVO	DRAWING DATE: November 21, 2025	
DRAWING CHECKED C. MCALISTER		

PROJECT NO.	DRAINAGE PLAN	ENGLISH
A024(149)	US 20, BONNEVILLE COUNTY LINE TO MP 291 STA. 6067+00 TO STA. 6079+00 PHASE 1	COUNTY BINGHAM/BONNEVILLE KEY NUMBER 24149 SHEET 209 OF 441

NOT APPROVED FOR CONSTRUCTION
INTERMEDIATE

November 21, 2025 4:47:13 PM
pw://itd-pw.bentley.com:itd-pw-01/Documents/District 6/Projects/prj24394/Project_Development/Plan Sheets/Package 2 (KN 24149)/Drainage/24149_DrpI_D201B

T.3N., R.34E., B.M.

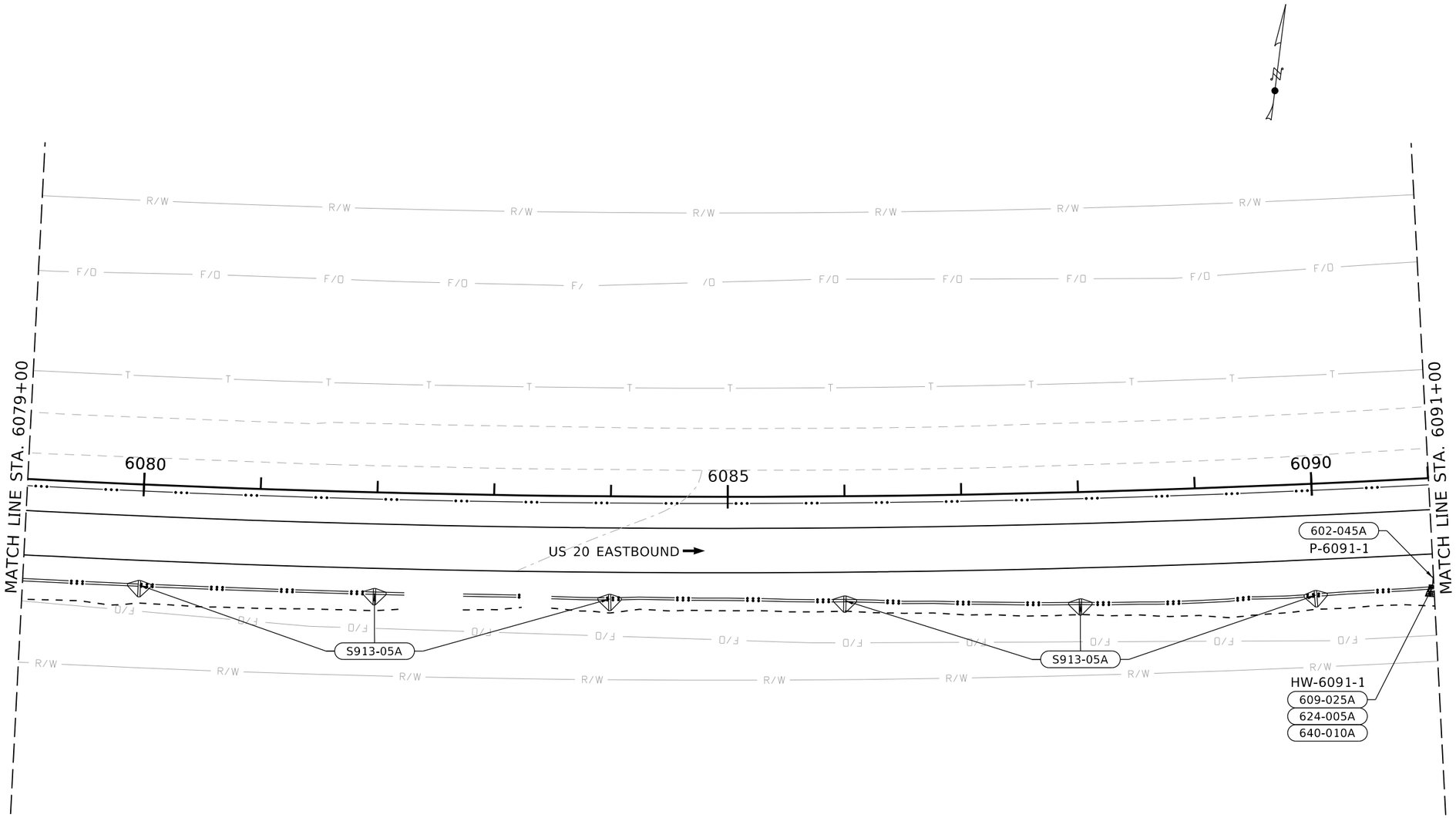

602-045A	**24" PIPE CULVERT**
12 FT	STA. 6090+98.94, 93.50' RT TO STA. 6091+00.00, 81.68' RT
609-025A	**MINOR STRUCTURES (24" CONCRETE HEADWALL)**
1 EACH	STA. 6090+98.94, 93.50' RT
624-005A	**LOOSE RIPRAP (CLASS I)**
4.7 CY	STA. 6090+98.94, 93.50' RT
640-010A	**RIPRAP/EROSION CONTROL**
14 SY	STA. 6090+98.94, 93.50' RT
S913-05A	**SP DITCH BERM**
4.9 CY	STA. 6080+00, 86.27' RT
4.9 CY	STA. 6082+00, 86.27' RT
4.9 CY	STA. 6084+00, 87.81' RT
4.9 CY	STA. 6086+00, 89.31' RT
4.9 CY	STA. 6088+00, 95.39' RT
4.9 CY	STA. 6090+00, 95.45' RT

NOTES:

1. SEE SP DITCH BERM DETAIL FOR DITCH BERM DIMENSIONS.

2. IN PHASE 1, RETAIN AND PROTECT EXISTING CULVERTS. CONSTRUCT INLET OR JUNCTION BOX OVER EXISTING CULVERT, AND CONSTRUCT PROPOSED CULVERT UNDER PHASE 1 ROADWAY.

3. SEE PIPE COVER AND DAYLIGHT DETAILS FOR GRADING INFORMATION.

Scale (Feet)
50 0 50 100

REVISIONS			
NO.	DATE	BY	DESCRIPTION

DESIGNED D. ABEDI	SCALES SHOWN ARE FOR 11" X 17" PRINTS ONLY
DESIGN CHECKED C. MCALISTER	
DETAILED P. CONSALVO	CADD FILE NAME 24149_Drpl_D201B.DGN
DRAWING CHECKED C. MCALISTER	DRAWING DATE: November 21, 2025

IDAHO TRANSPORTATION DEPARTMENT
YOUR Safety→YOUR Mobility→YOUR Economic Opportunity
DAVID EVANS AND ASSOCIATES INC.

PROJECT NO.	DRAINAGE PLAN
A024(149)	US 20, BONNEVILLE COUNTY LINE TO MP 291 STA. 6079+00 TO STA. 6091+00 PHASE 1

ENGLISH

COUNTY BINGHAM/BONNEVILLE

KEY NUMBER 24149

SHEET 210 OF 441

NOT APPROVED FOR CONSTRUCTION INTERMEDIATE

November 21, 2025 4:47:16 PM
pw://itd-pw.bentley.com:itd-pw-01/Documents/District 6/Projects/prj24394/Project_Development/Plan Sheets/Package 2 (KN 24149)/Drainage/24149_Drpl_D201B

T.3N., R.34E., B.M.

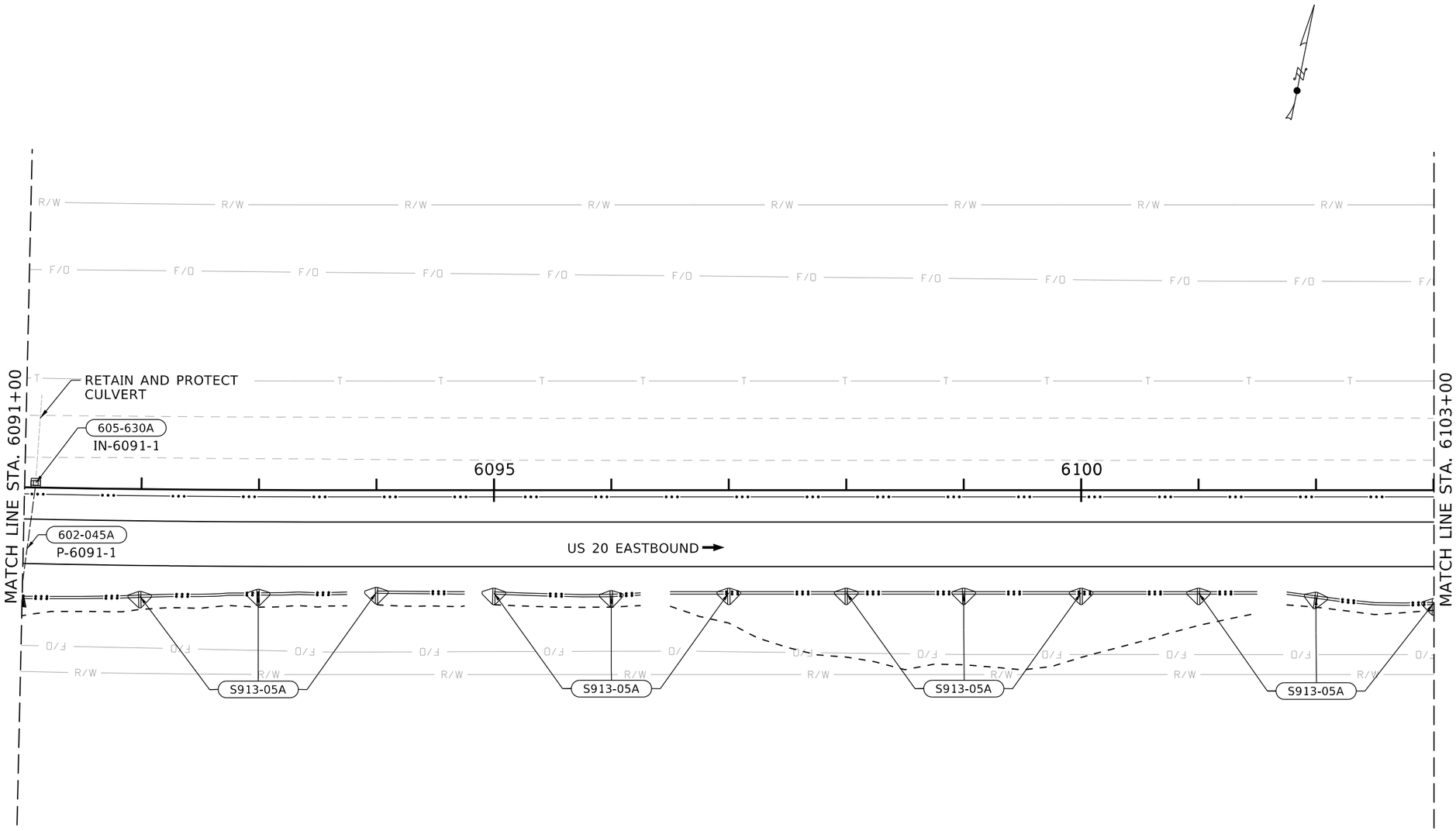

602-045A	**24" PIPE CULVERT**
85 FT	STA. 6091+00.00, 81.68' RT TO STA. 6091+09.79, 3.68' LT
605-630A	**INLET TYPE 8**
1 EACH	STA. 6091+09.79, 3.68' LT
S913-05A	**SP DITCH BERM**
4.9 CY	STA. 6092+00, 91.10' RT
4.9 CY	STA. 6093+00, 88.46' RT
4.9 CY	STA. 6094+00, 86.83' RT
4.9 CY	STA. 6095+00, 87.44' RT
4.9 CY	STA. 6096+00, 89.59' RT
4.9 CY	STA. 6097+00, 87.42' RT
4.9 CY	STA. 6098+00, 87.42' RT
4.9 CY	STA. 6099+00, 87.42' RT
4.9 CY	STA. 6100+00, 87.42' RT
4.9 CY	STA. 6101+00, 87.42' RT
4.9 CY	STA. 6102+00, 90.96' RT
4.9 CY	STA. 6103+00, 96.36' RT

NOTES:

1. SEE SP DITCH BERM DETAIL FOR DITCH BERM DIMENSIONS.

2. IN PHASE 1, RETAIN AND PROTECT EXISTING CULVERTS. CONSTRUCT INLET OR JUNCTION BOX OVER EXISTING CULVERT, AND CONSTRUCT PROPOSED CULVERT UNDER PHASE 1 ROADWAY.

3. SEE PIPE COVER AND DAYLIGHT DETAILS FOR GRADING INFORMATION.

Scale (Feet)
50 0 50 100

REVISIONS			
NO.	DATE	BY	DESCRIPTION

DESIGNED D. ABEDI	SCALES SHOWN ARE FOR 11" X 17" PRINTS ONLY	IDAHO TRANSPORTATION DEPARTMENT YOUR Safety→YOUR Mobility→YOUR Economic Opportunity DAVID EVANS AND ASSOCIATES INC.
DESIGN CHECKED C. MCALISTER		
DETAILED P. CONSALVO	CADD FILE NAME 24149_DrpI_D201B.DGN	
DRAWING CHECKED C. MCALISTER	DRAWING DATE: November 21, 2025	

PROJECT NO.	DRAINAGE PLAN	
A024(149)	US 20, BONNEVILLE COUNTY LINE TO MP 291 STA. 6091+00 TO STA. 6103+00 PHASE 1	*ENGLISH* COUNTY BINGHAM/BONNEVILLE KEY NUMBER 24149 SHEET 211 OF 441

NOT APPROVED FOR CONSTRUCTION
INTERMEDIATE

November 21, 2025 4:47:19 PM
pw://itd-pw.bentley.com:itd-pw-01/Documents/District 6/Projects/prj24394/Project_Development/Plan Sheets/Package 2 (KN 24149)/Drainage/24149_DrpI_D201B

T.3N., R.34E., B.M.

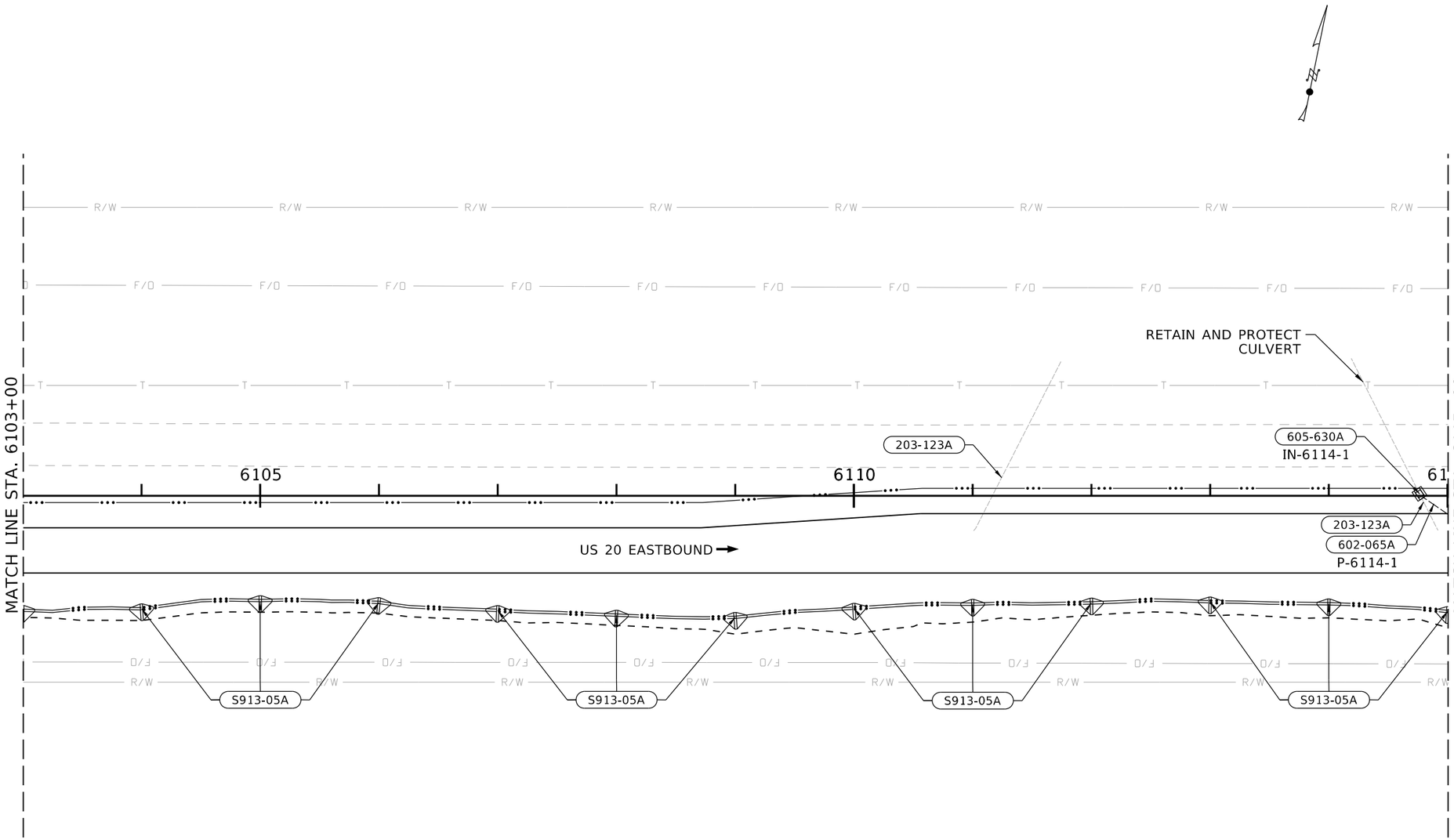

203-123A	**REMOVAL OF MISCELLANEOUS ITEMS (PIPE)**
164 FT	STA. 6111+00.83, 29.38' RT TO STA. 6111+74.36, 113.15' RT
28 FT	STA. 6114+79.49, 4.67' RT TO STA. 6114+91.85, 29.12' RT
602-065A	**36" PIPE CULVERT**
26 FT	STA. 6114+76.31, 1.64' LT TO STA. 6115+00.00, 14.67' RT
605-630A	**INLET TY 8**
1 EACH	STA. 6114+76.31, 1.64' LT
S913-05A	**SP DITCH BERM**
4.9 CY	STA. 6104+00, 95.08' RT
4.9 CY	STA. 6105+00, 88.14' RT
4.9 CY	STA. 6106+00, 89.81' RT
4.9 CY	STA. 6107+00, 96.50' RT
4.9 CY	STA. 6108+00, 100.41' RT
4.9 CY	STA. 6109+00, 102.31' RT
4.9 CY	STA. 6110+00, 94.59' RT
4.9 CY	STA. 6111+00, 91.27' RT
4.9 CY	STA. 6112+00, 90.17' RT
4.9 CY	STA. 6113+00, 89.25' RT
4.9 CY	STA. 6114+00, 90.90' RT
4.9 CY	STA. 6115+00, 97.44' RT

NOTES:

1. SEE SP DITCH BERM DETAIL FOR DITCH BERM DIMENSIONS.

2. IN PHASE 1, RETAIN AND PROTECT EXISTING CULVERTS. CONSTRUCT INLET OR JUNCTION BOX OVER EXISTING CULVERT, AND CONSTRUCT PROPOSED CULVERT UNDER PHASE 1 ROADWAY.

3. SEE PIPE COVER AND DAYLIGHT DETAILS FOR GRADING INFORMATION.

Scale (Feet)
50 0 50 100

REVISIONS			
NO.	DATE	BY	DESCRIPTION

DESIGNED D. ABEDI	SCALES SHOWN ARE FOR 11" X 17" PRINTS ONLY
DESIGN CHECKED C. MCALISTER	
DETAILED P. CONSALVO	CADD FILE NAME 24149_DrpI_D201B.DGN
DRAWING CHECKED C. MCALISTER	DRAWING DATE: November 21, 2025

IDAHO TRANSPORTATION DEPARTMENT
YOUR Safety→YOUR Mobility→YOUR Economic Opportunity
DAVID EVANS AND ASSOCIATES INC.

PROJECT NO.	DRAINAGE PLAN
A024(149)	US 20, BONNEVILLE COUNTY LINE TO MP 291 STA. 6103+00 TO STA. 6115+00 PHASE 1

ENGLISH

COUNTY BINGHAM/BONNEVILLE

KEY NUMBER 24149

SHEET 212 OF 441

NOT APPROVED
INTERMEDIATE
FOR CONSTRUCTION

November 21, 2025 4:47:21 PM
pw://itd-pw.bentley.com:itd-pw-01/Documents/District 6/Projects/prj24394/Project_Development/Plan Sheets/Package 2 (KN 24149)/Drainage/24149_DrpI_D201B

T.3N., R.34E., B.M.

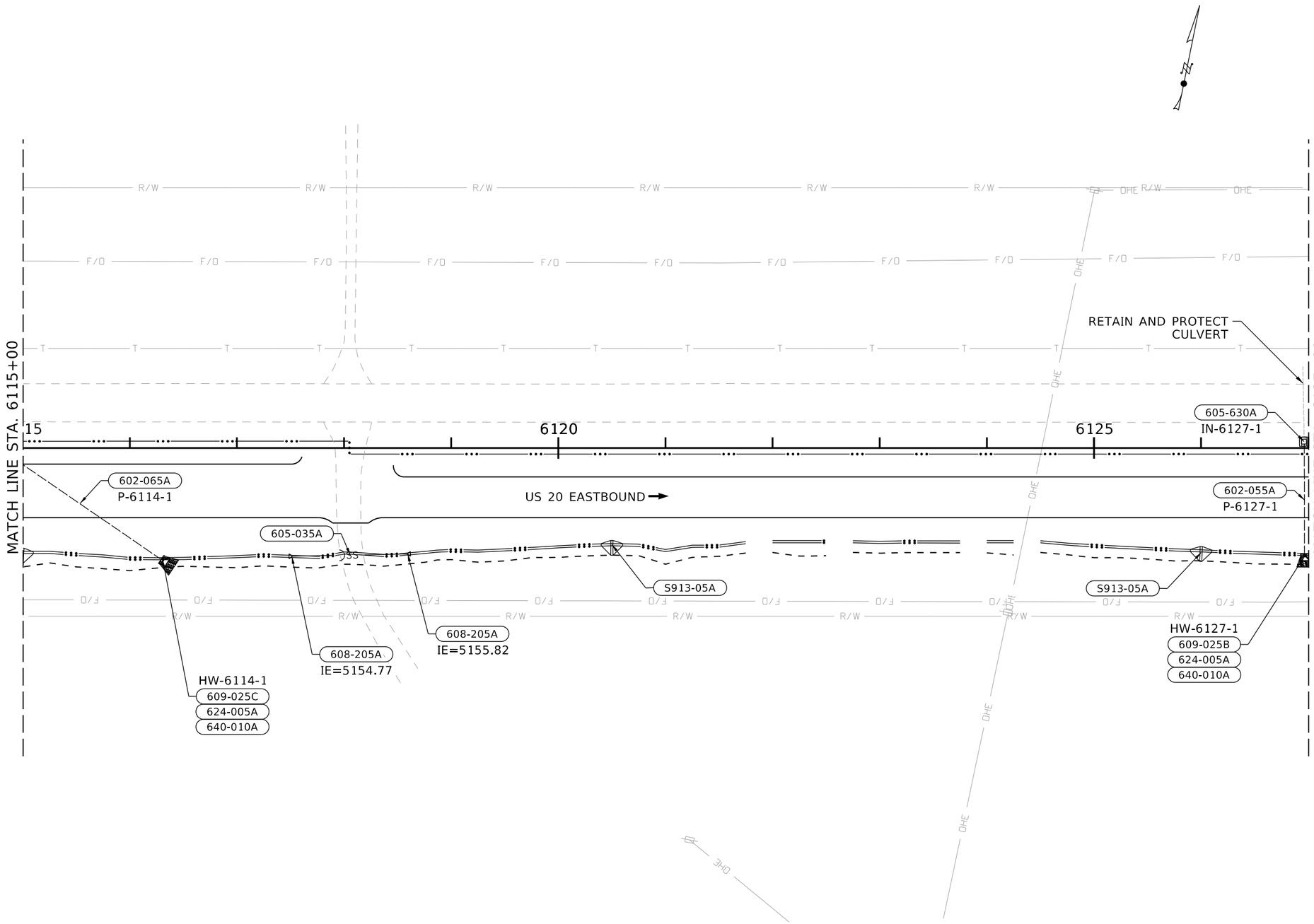

602-065A **36" PIPE CULVERT**
160 FT STA. 6115+00.00, 14.67' RT TO STA. 6116+30.85, 105.06' RT
106 FT STA. 6126+96.07, 5.95' LT TO STA. 6126+96.46, 101.12' RT

605-035A **18" STORM SEWER PIPE**
109 FT STA. 6117+51.14, 101.04' RT TO STA. 6118+59.41, 98.89' RT

605-630A **INLET TYPE 8**
1 EACH STA. 6126+96.07, 5.95' LT

608-205A **METAL SAFETY APRON (PARALLEL) (18")**
1 EACH STA. 6117+51.14, 101.04' RT
1 EACH STA. 6118+59.41, 98.89' RT

609-025C **MINOR STRUCTURES (36" CONCRETE HEADWALL)**
1 EACH STA. 6116+30.85, 105.06' RT
1 EACH STA. 6126+96.46, 101.12' RT

624-005A **LOOSE RIPRAP (CLASS I)**
10.4 CY STA. 6116+30.85, 105.06' RT
10.4 CY STA. 6126+96.46, 101.12' RT

640-010A **RIPRAP/EROSION CONTROL GEOTEXTILE**
25 SY STA. 6116+30.85, 105.06' RT
25 SY STA. 6126+96.46, 101.12' RT

S913-05A **SP DITCH BERM**
4.9 CY STA. 6120+50, 90.19' RT
4.9 CY STA. 6126+00, 95.95' RT

NOTES:

1. SEE SP DITCH BERM DETAIL FOR DITCH BERM DIMENSIONS.

2. IN PHASE 1, RETAIN AND PROTECT EXISTING CULVERTS. CONSTRUCT INLET OR JUNCTION BOX OVER EXISTING CULVERT, AND CONSTRUCT PROPOSED CULVERT UNDER PHASE 1 ROADWAY.

3. SEE PIPE COVER AND DAYLIGHT DETAILS FOR GRADING INFORMATION.

Scale (Feet)
50 0 50 100

REVISIONS			
NO.	DATE	BY	DESCRIPTION

DESIGNED D. ABEDI
DESIGN CHECKED C. MCALISTER
DETAILED P. CONSALVO
DRAWING CHECKED C. MCALISTER

SCALES SHOWN ARE FOR 11" X 17" PRINTS ONLY
CADD FILE NAME 24149_DrpI_D201B.DGN
DRAWING DATE: November 21, 2025

IDAHO TRANSPORTATION DEPARTMENT
YOUR Safety→YOUR Mobility→YOUR Economic Opportunity
DAVID EVANS AND ASSOCIATES INC.

PROJECT NO. A024(149)

DRAINAGE PLAN
US 20, BONNEVILLE COUNTY
LINE TO MP 291
STA. 6115+00 TO STA. 6127+00
PHASE 1

ENGLISH
COUNTY BINGHAM/BONNEVILLE
KEY NUMBER 24149
SHEET 213 OF 441

NOT APPROVED
INTERMEDIATE
FOR CONSTRUCTION

November 21, 2025 4:47:24 PM
pw://itd-pw.bentley.com:itd-pw-01/Documents/District 6/Projects/prj24394/Project_Development/Plan Sheets/Package 2 (KN 24149)/Drainage/24149_DrpI_D201B

T.3N., R.34E., B.M.

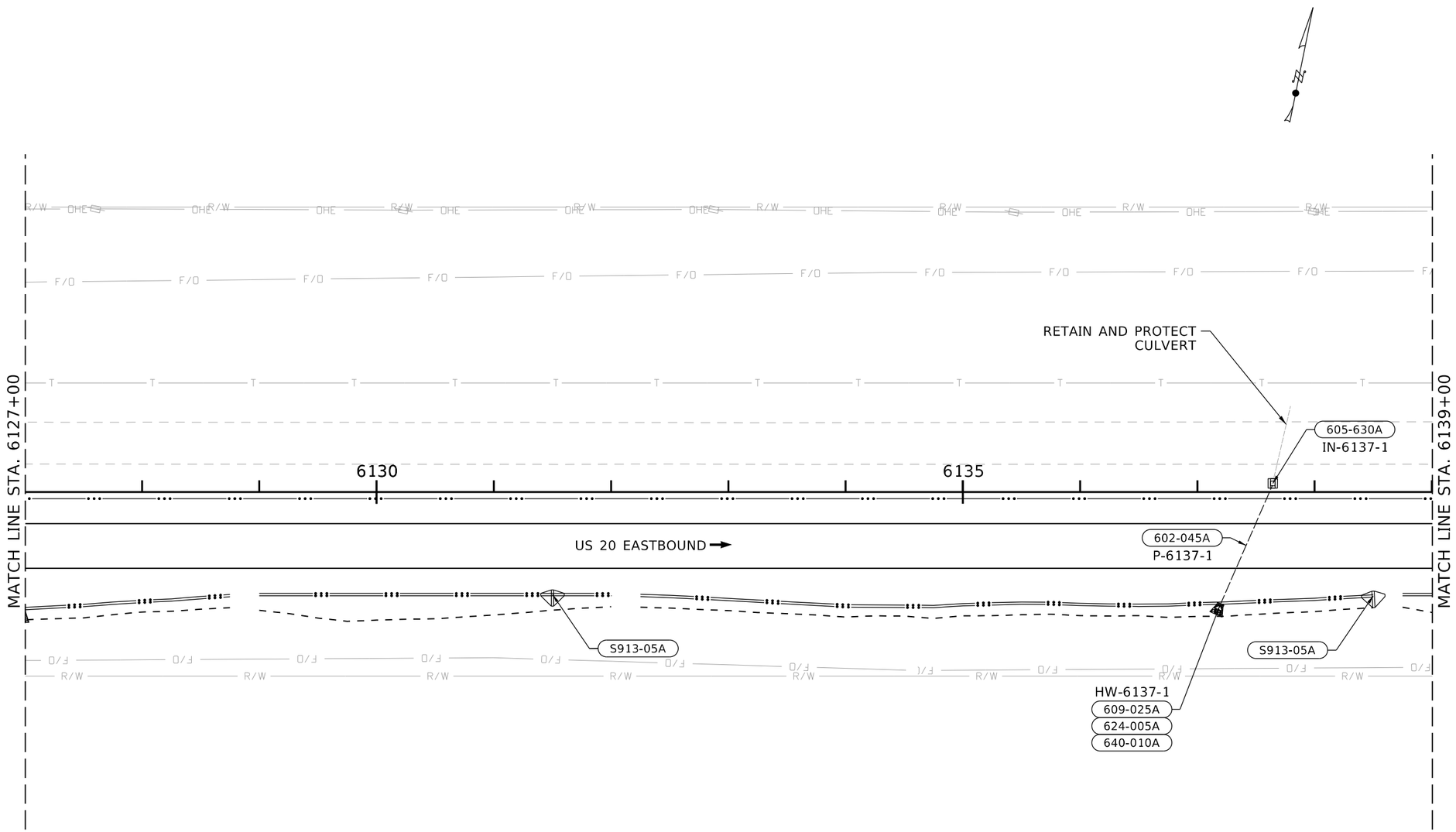

602-045A 113 FT	**24" PIPE CULVERT** STA. 6137+19.11, 97.03' RT TO STA. 6137+64.32, 7.37' LT
605-630A 1 EACH	**INLET TYPE 8** STA. 6137+64.32, 7.37' LT
609-025A 1 EACH	**MINOR STRUCTURES (24" CONCRETE HEADWALL)** STA. 6137+19.11, 97.03' RT
624-005A 4.7 CY	**LOOSE RIPRAP (CLASS I)** STA. 6137+19.11, 97.03' RT
640-010A 14 SY	**RIPRAP/EROSION CONTROL GEOTEXTILE** STA. 6137+19.11, 97.03' RT
S913-05A 4.9 CY 4.9 CY	**SP DITCH BERM** STA. 6131+50, 87.42' RT STA. 6138+50, 88.56' RT

NOTES:

1. SEE SP DITCH BERM DETAIL FOR DITCH BERM DIMENSIONS.
2. IN PHASE 1, RETAIN AND PROTECT EXISTING CULVERTS. CONSTRUCT INLET OR JUNCTION BOX OVER EXISTING CULVERT, AND CONSTRUCT PROPOSED CULVERT UNDER PHASE 1 ROADWAY.
3. SEE PIPE COVER AND DAYLIGHT DETAILS FOR GRADING INFORMATION.

Scale (Feet)
50 0 50 100

NOT APPROVED
INTERMEDIATE
FOR CONSTRUCTION

REVISIONS			
NO.	DATE	BY	DESCRIPTION

DESIGNED D. ABEDI
DESIGN CHECKED C. MCALISTER
DETAILED P. CONSALVO
DRAWING CHECKED C. MCALISTER

SCALES SHOWN ARE FOR 11" X 17" PRINTS ONLY
CADD FILE NAME 24149_DrpI_D201B.DGN
DRAWING DATE: November 21, 2025

IDAHO TRANSPORTATION DEPARTMENT
YOUR Safety→YOUR Mobility→YOUR Economic Opportunity
DAVID EVANS AND ASSOCIATES INC.

PROJECT NO. A024(149)

DRAINAGE PLAN
US 20, BONNEVILLE COUNTY
LINE TO MP 291
STA. 6127+00 TO STA. 6139+00
PHASE 1

ENGLISH
COUNTY BINGHAM/BONNEVILLE
KEY NUMBER 24149
SHEET 214 OF 441

November 21, 2025 4:47:27 PM
pw://itd-pw.bentley.com:itd-pw-01/Documents/District 6/Projects/prj24394/Project_Development/Plan Sheets/Package 2 (KN 24149)/Drainage/24149_DrpI_D201B

T.3N., R.34E., B.M.

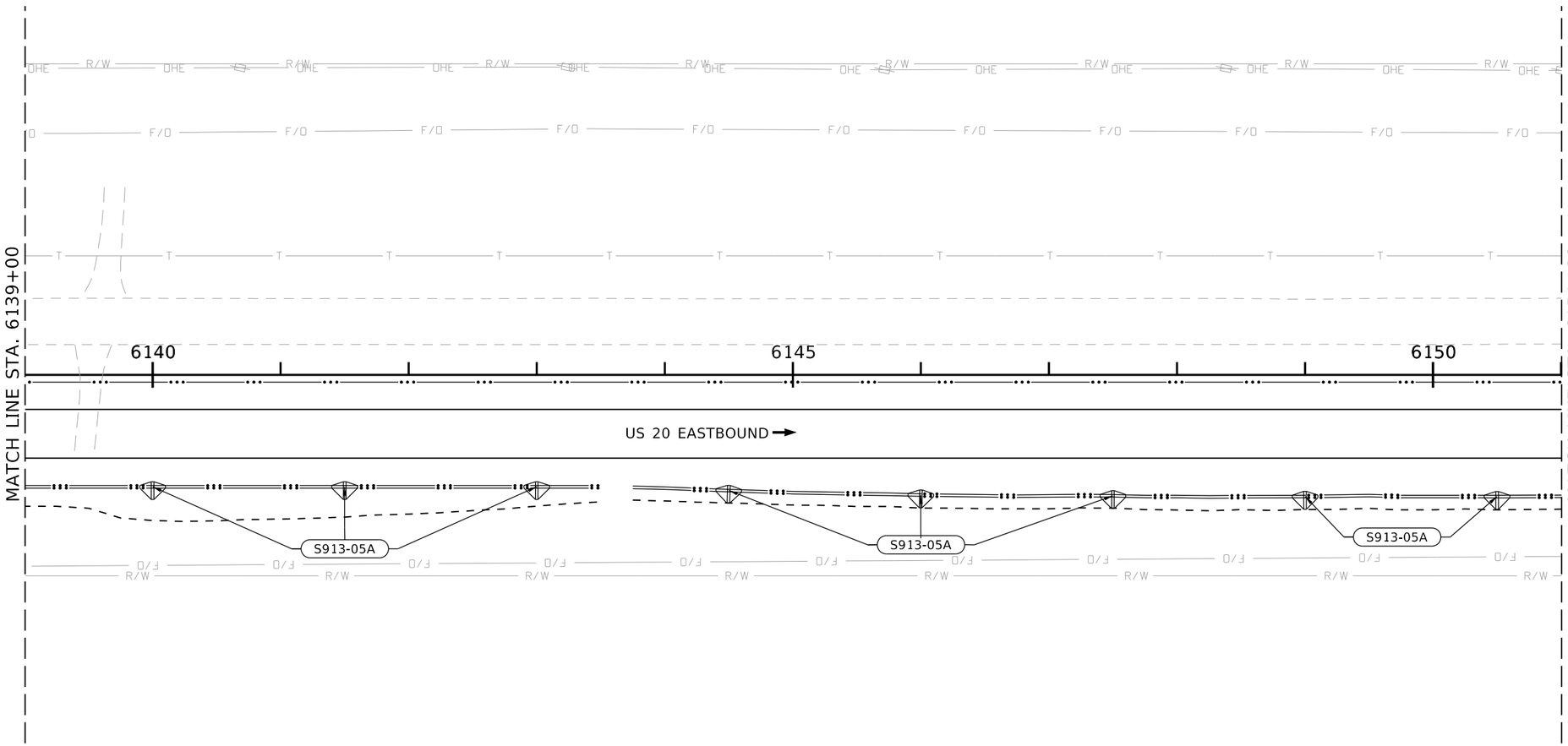

S913-05A	SP DITCH BERM
4.9 CY	STA. 6140+00, 87.42' RT
4.9 CY	STA. 6141+50, 87.42' RT
4.9 CY	STA. 6143+00, 87.42' RT
4.9 CY	STA. 6144+50, 90.30' RT
4.9 CY	STA. 6146+00, 93.87' RT
4.9 CY	STA. 6147+50, 94.48' RT
4.9 CY	STA. 6149+00, 94.99' RT
4.9 CY	STA. 6150+50, 95.06' RT

NOTES:

1. SEE SP DITCH BERM DETAIL FOR DITCH BERM DIMENSIONS.

Scale (Feet)
50 0 50 100

NOT APPROVED
INTERMEDIATE
FOR CONSTRUCTION

REVISIONS			
NO.	DATE	BY	DESCRIPTION

DESIGNED	D. ABEDI
DESIGN CHECKED	C. MCALISTER
DETAILED	P. CONSALVO
DRAWING CHECKED	C. MCALISTER

SCALES SHOWN ARE FOR 11" X 17" PRINTS ONLY

CADD FILE NAME 24149_DrpI_D201B.DGN

DRAWING DATE: November 21, 2025

IDAHO TRANSPORTATION DEPARTMENT
YOUR Safety→YOUR Mobility→YOUR Economic Opportunity

DAVID EVANS AND ASSOCIATES INC.

PROJECT NO.
A024(149)

DRAINAGE PLAN
US 20, BONNEVILLE COUNTY
LINE TO MP 291
STA. 6139+00 TO STA. 6151+00
PHASE 1

ENGLISH

COUNTY
BINGHAM/BONNEVILLE

KEY NUMBER
24149

SHEET 215 OF 441

November 21, 2025 4:47:29 PM
pw://itd-pw.bentley.com:itd-pw-01/Documents/District 6/Projects/prj24394/Project_Development/Plan Sheets/Package 2 (KN 24149)/Drainage/24149_DrpI_D201B

T.3N., R.34E., B.M.

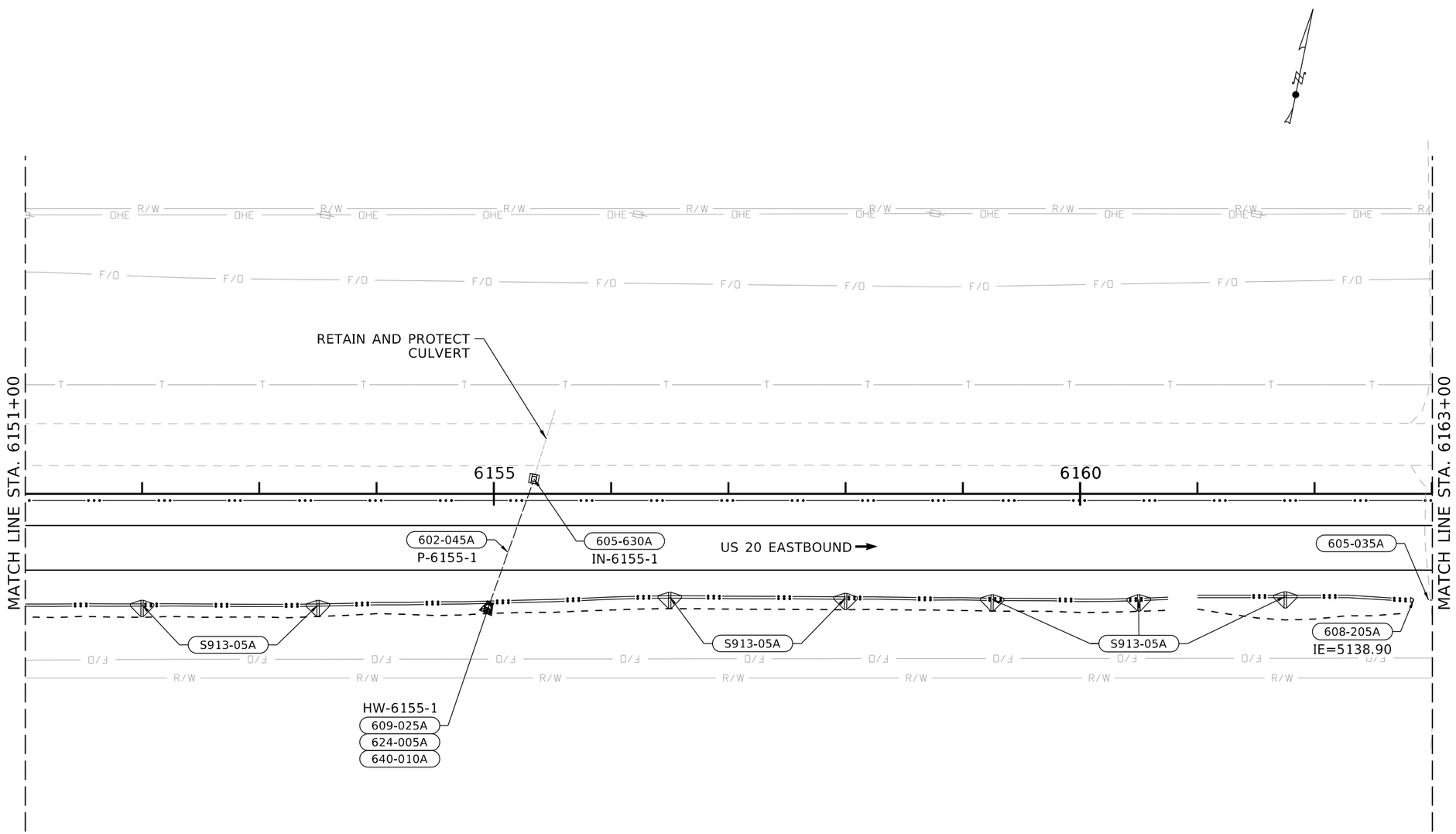

602-045A	**24" PIPE CULVERT**
112 FT	STA. 6154+96.25, 94.22' RT TO STA. 6155+34.22, 12.73' LT
605-035A	**18" STORM SEWER PIPE**
16 FT	STA. 6162+84.33, 90.53' RT TO STA. 6163+00.00, 90.53' RT
605-630A	**INLET TYPE 8**
1 EACH	STA. 6155+34.22, 12.73' LT
608-205A	**METAL SAFETY APRON (PARALLEL) (18")**
1 EACH	STA. 6162+84.33, 90.53' RT
609-025A	**MINOR STRUCTURES (24" CONCRETE HEADWALL)**
1 EACH	STA. 6154+96.25, 94.22' RT
624-005A	**LOOSE RIPRAP (CLASS I)**
4.7 CY	STA. 6154+96.25, 94.22' RT
640-010A	**RIPRAP/EROSION CONTROL GEOTEXTILE**
14 SY	STA. 6154+96.25, 94.22' RT
S913-05A	**SP DITCH BERM**
4.9 CY	STA. 6152+00, 94.69' RT
4.9 CY	STA. 6153+50, 94.78' RT
4.9 CY	STA. 6156+50, 87.84' RT
4.9 CY	STA. 6158+00, 88.81' RT
4.9 CY	STA. 6159+25, 89.94' RT
4.9 CY	STA. 6160+50, 90.02' RT
4.9 CY	STA. 6161+75, 87.42' RT

NOTES:

1. SEE SP DITCH BERM DETAIL FOR DITCH BERM DIMENSIONS.
2. IN PHASE 1, RETAIN AND PROTECT EXISTING CULVERTS. CONSTRUCT INLET OR JUNCTION BOX OVER EXISTING CULVERT, AND CONSTRUCT PROPOSED CULVERT UNDER PHASE 1 ROADWAY.
3. SEE PIPE COVER AND DAYLIGHT DETAILS FOR GRADING INFORMATION.

Scale (Feet)
50 0 50 100

NOT APPROVED FOR CONSTRUCTION
INTERMEDIATE

REVISIONS			
NO.	DATE	BY	DESCRIPTION

DESIGNED D. ABEDI	SCALES SHOWN ARE FOR 11" X 17" PRINTS ONLY	IDAHO TRANSPORTATION DEPARTMENT YOUR Safety→YOUR Mobility→YOUR Economic Opportunity DAVID EVANS AND ASSOCIATES INC.
DESIGN CHECKED C. MCALISTER		
DETAILED P. CONSALVO	CADD FILE NAME 24149_DrpI_D201B.DGN	
DRAWING CHECKED C. MCALISTER	DRAWING DATE: November 21, 2025	

PROJECT NO.	DRAINAGE PLAN	ENGLISH
A024(149)	US 20, BONNEVILLE COUNTY LINE TO MP 291 STA. 6151+00 TO STA. 6163+00 PHASE 1	COUNTY BINGHAM/BONNEVILLE KEY NUMBER 24149 SHEET 216 OF 441

November 21, 2025 4:47:32 PM
pw://itd-pw.bentley.com:itd-pw-01/Documents/District 6/Projects/prj24394/Project_Development/Plan Sheets/Package 2 (KN 24149)/Drainage/24149_DrpI_D201B

T.3N., R.34E., B.M.

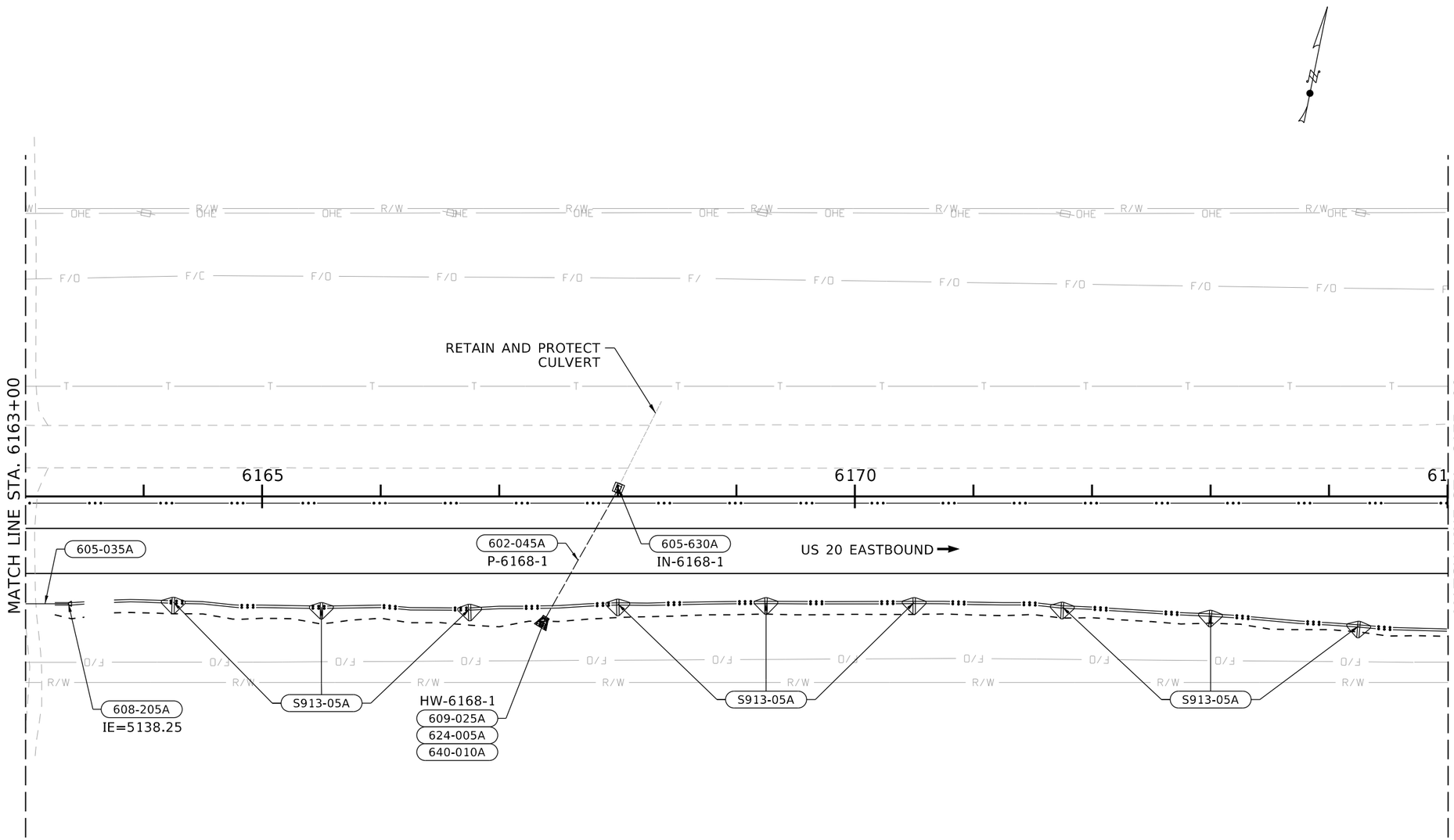

602-045A	**24" PIPE CULVERT**
126 FT	STA. 6167+38.59, 103.49' RT TO STA. 6168+00.48, 6.96' LT
605-035A	**18" STORM SEWER PIPE**
37 FT	STA. 6163+00.00, 90.53' RT TO STA. 6163+36.57, 90.57' RT
605-630A	**INLET TYPE 8**
1 EACH	STA. 6168+00.48, 6.96' LT
608-205A	**METAL SAFETY APRON (PARALLEL) (18")**
1 EACH	STA. 6163+36.57, 90.57' RT
609-025A	**MINOR STRUCTURES (24" CONCRETE HEADWALL)**
1 EACH	STA. 6167+38.59, 103.49' RT
624-005A	**LOOSE RIPRAP (CLASS I)**
4.7 CY	STA. 6167+38.59, 103.49' RT
640-010A	**RIPRAP/EROSION CONTROL GEOTEXTILE**
14 SY	STA. 6167+38.59, 103.49' RT
S913-05A	**SP DITCH BERM**
4.9 CY	STA. 6164+25, 89.13' RT
4.9 CY	STA. 6165+50, 93.55' RT
4.9 CY	STA. 6166+75, 94.97' RT
4.9 CY	STA. 6168+00, 90.65' RT
4.9 CY	STA. 6169+25, 89.45' RT
4.9 CY	STA. 6170+50, 89.41' RT
4.9 CY	STA. 6171+75, 93.28' RT
4.9 CY	STA. 6173+00, 100.05' RT
4.9 CY	STA. 6174+25, 109.34' RT

NOTES:

1. SEE SP DITCH BERM DETAIL FOR DITCH BERM DIMENSIONS.
2. IN PHASE 1, RETAIN AND PROTECT EXISTING CULVERTS. CONSTRUCT INLET OR JUNCTION BOX OVER EXISTING CULVERT, AND CONSTRUCT PROPOSED CULVERT UNDER PHASE 1 ROADWAY.
3. SEE PIPE COVER AND DAYLIGHT DETAILS FOR GRADING INFORMATION.

Scale (Feet)
50 0 50 100

NOT APPROVED FOR CONSTRUCTION
INTERMEDIATE

REVISIONS			
NO.	DATE	BY	DESCRIPTION

DESIGNED D. ABEDI
DESIGN CHECKED C. MCALISTER
DETAILED P. CONSALVO
DRAWING CHECKED C. MCALISTER

SCALES SHOWN ARE FOR 11" X 17" PRINTS ONLY
CADD FILE NAME 24149_DrpI_D201B.DGN
DRAWING DATE: November 21, 2025

IDAHO TRANSPORTATION DEPARTMENT
YOUR Safety→YOUR Mobility→YOUR Economic Opportunity
DAVID EVANS AND ASSOCIATES INC.

PROJECT NO. A024(149)

DRAINAGE PLAN
US 20, BONNEVILLE COUNTY
LINE TO MP 291
STA. 6163+00 TO STA. 6175+00
PHASE 1

ENGLISH
COUNTY BINGHAM/BONNEVILLE
KEY NUMBER 24149
SHEET 217 OF 441

November 21, 2025 4:47:35 PM
pw://itd-pw.bentley.com:itd-pw-01/Documents/District 6/Projects/prj24394/Project_Development/Plan Sheets/Package 2 (KN 24149)/Drainage/24149_DrpI_D201B.dgn

T.3N., R.34E., B.M.

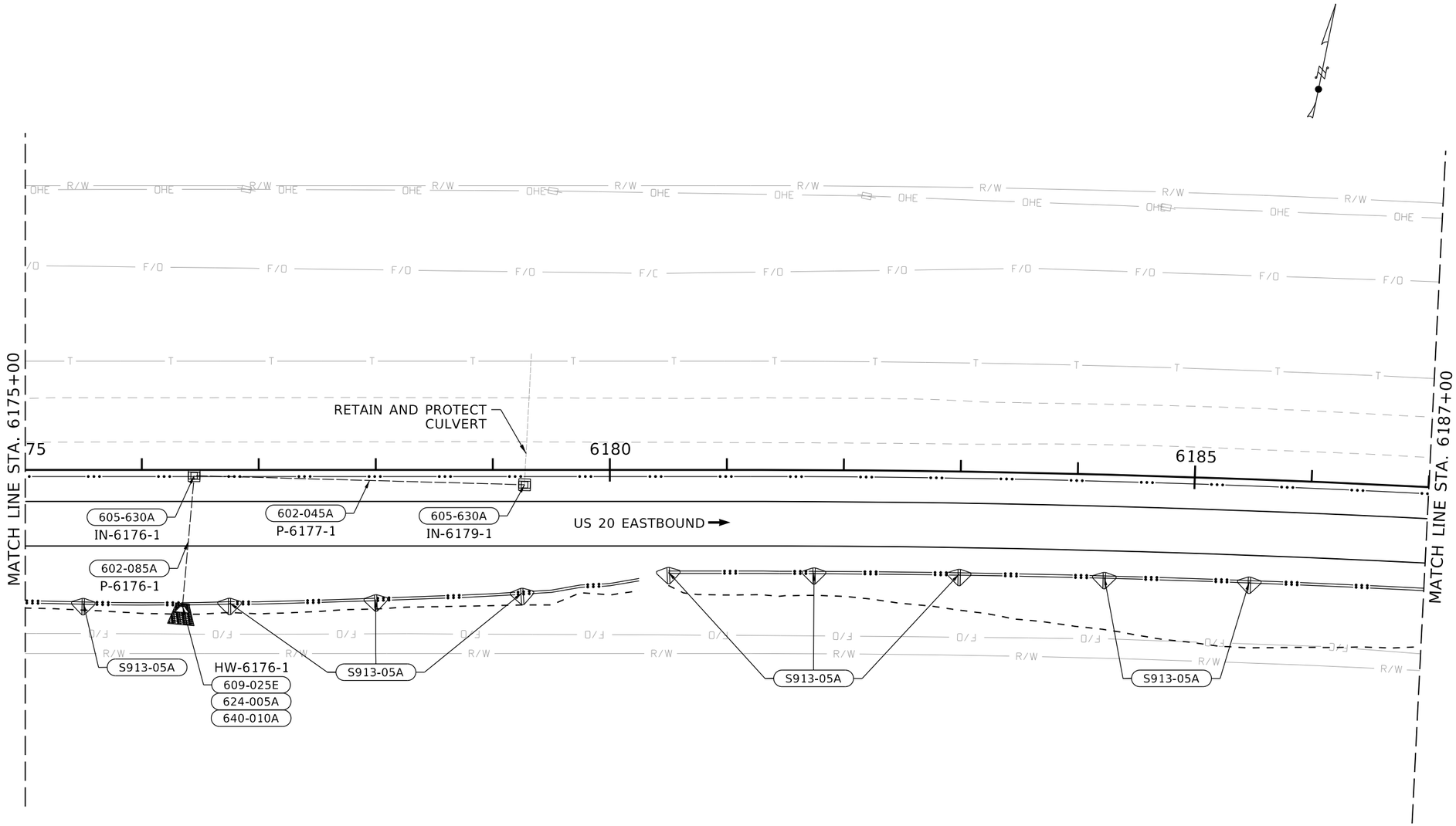

602-045A	**24" PIPE CULVERT**
280 FT	STA. 6176+44.76, 4.92' RT TO STA. 6179+27.16, 12.65' RT
602-085A	**48" PIPE CULVERT**
111 FT	STA. 6176+44.76, 4.92' RT TO STA. 6176+34.79, 116.22' RT
605-630A	**INLET TYPE 8**
1 EACH	STA. 6176+44.76, 4.92' RT
1 EACH	STA. 6179+27.16, 12.65' RT
609-025E	**MINOR STRUCTURES (48" CONCRETE HEADWALL)**
1 EACH	STA. 6176+34.79, 116.22' RT
624-005A	**LOOSE RIPRAP (CLASS I)**
18.5 CY	STA. 6176+34.79, 116.22' RT
640-010A	**RIPRAP/EROSION CONTROL GEOTEXTILE**
40 SY	STA. 6176+34.79, 116.22' RT
S913-05A	**SP DITCH BERM**
4.9 CY	STA. 6175+50, 113.87' RT
4.9 CY	STA. 6176+75, 113.72' RT
4.9 CY	STA. 6178+00, 110.77' RT
4.9 CY	STA. 6179+25, 105.22' RT
4.9 CY	STA. 6180+50, 87.42' RT
4.9 CY	STA. 6181+75, 87.59' RT
4.9 CY	STA. 6183+00, 87.59' RT
4.9 CY	STA. 6184+25, 87.58' RT
4.9 CY	STA. 6185+50, 87.58' RT

NOTES:

1. SEE SP DITCH BERM DETAIL FOR DITCH BERM DIMENSIONS.
2. IN PHASE 1, RETAIN AND PROTECT EXISTING CULVERTS. CONSTRUCT INLET OR JUNCTION BOX OVER EXISTING CULVERT, AND CONSTRUCT PROPOSED CULVERT UNDER PHASE 1 ROADWAY.
3. SEE PIPE COVER AND DAYLIGHT DETAILS FOR GRADING INFORMATION.

Scale (Feet)
50 0 50 100

REVISIONS			
NO.	DATE	BY	DESCRIPTION

DESIGNED D. ABEDI
DESIGN CHECKED C. MCALISTER
DETAILED P. CONSALVO
DRAWING CHECKED C. MCALISTER

SCALES SHOWN ARE FOR 11" X 17" PRINTS ONLY
CADD FILE NAME 24149_Drpl_D201C.DGN
DRAWING DATE: November 21, 2025

IDAHO TRANSPORTATION DEPARTMENT
YOUR Safety→YOUR Mobility→YOUR Economic Opportunity
DAVID EVANS AND ASSOCIATES INC.

PROJECT NO. A024(149)

DRAINAGE PLAN
US 20, BONNEVILLE COUNTY
LINE TO MP 291
STA. 6175+00 TO STA. 6187+00
PHASE 1

ENGLISH
COUNTY BINGHAM/BONNEVILLE
KEY NUMBER 24149
SHEET 218 OF 441

NOT APPROVED FOR INTERMEDIATE CONSTRUCTION

November 21, 2025 4:47:54 PM
pw://itd-pw.bentley.com:itd-pw-01/Documents/District 6/Projects/pj\24394/Project_Development/Plan Sheets/Package 2 (KN 24149)/Drainage/24149_Drpl_D201C

T.3N., R.34E., B.M.

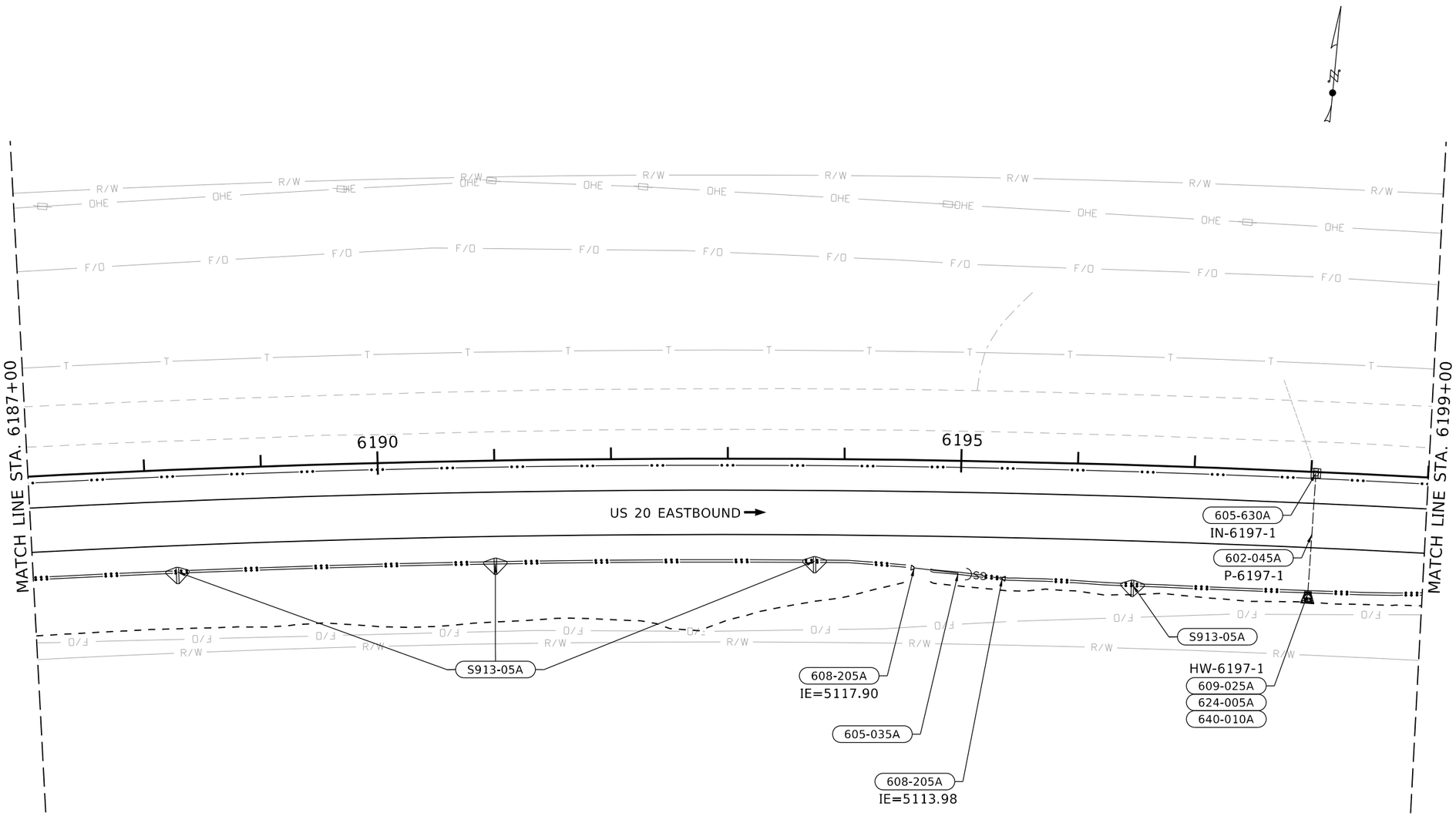

602-045A **24" PIPE CULVERT**
103 FT STA. 6198+03.94, 1.20' RT TO STA. 6198+01.60, 104.72' RT

605-035A **18" STORM SEWER PIPE**
76 FT STA. 6194+60.98, 92.50' RT TO STA. 6195+37.22, 99.94' RT

605-630A **INLET TYPE 8**
1 EACH STA. 6198+03.94, 1.20' RT

608-205A **METAL SAFETY APRON (PARALLEL) (18")**
1 EACH STA. 6194+60.98, 92.50' RT
1 EACH STA. 6195+37.22, 99.94' RT

609-025A **MINOR STRUCTURES (24" CONCRETE HEADWALL)**
1 EACH STA. 6198+01.60, 104.72' RT

624-005A **LOOSE RIPRAP (CLASS I)**
4.7 CY STA. 6198+01.60, 104.72' RT

640-010A **RIPRAP/EROSION CONTROL GEOTEXTILE**
14 SY STA. 6198+01.60, 104.72' RT

S913-05A **SP DITCH BERM**
4.9 CY STA. 6188+25, 87.59' RT
4.9 CY STA. 6191+00, 88.16' RT
4.9 CY STA. 6193+75, 87.60' RT
4.9 CY STA. 6196+50, 102.63' RT

NOTES:

1. SEE SP DITCH BERM DETAIL FOR DITCH BERM DIMENSIONS.

2. IN PHASE 1, RETAIN AND PROTECT EXISTING CULVERTS. CONSTRUCT INLET OR JUNCTION BOX OVER EXISTING CULVERT, AND CONSTRUCT PROPOSED CULVERT UNDER PHASE 1 ROADWAY.

3. SEE PIPE COVER AND DAYLIGHT DETAILS FOR GRADING INFORMATION.

Scale (Feet)
50 0 50 100

REVISIONS			
NO.	DATE	BY	DESCRIPTION

DESIGNED D. ABEDI
DESIGN CHECKED C. MCALISTER
DETAILED P. CONSALVO
DRAWING CHECKED C. MCALISTER

SCALES SHOWN ARE FOR 11" X 17" PRINTS ONLY
CADD FILE NAME 24149_DrpI_D201C.DGN
DRAWING DATE: November 21, 2025

IDAHO TRANSPORTATION DEPARTMENT
YOUR Safety→YOUR Mobility→YOUR Economic Opportunity
DAVID EVANS AND ASSOCIATES INC.

PROJECT NO. A024(149)

DRAINAGE PLAN
US 20, BONNEVILLE COUNTY LINE TO MP 291
STA. 6187+00 TO STA. 6199+00
PHASE 1

ENGLISH
COUNTY BINGHAM/BONNEVILLE
KEY NUMBER 24149
SHEET 219 OF 441

NOT APPROVED FOR INTERMEDIATE CONSTRUCTION

November 21, 2025 4:47:56 PM
pw://itd-pw.bentley.com:itd-pw-01/Documents/District 6/Projects/prj24394/Project_Development/Plan Sheets/Package 2 (KN 24149)/Drainage/24149_DrpI_D201C

T.3N., R.34E., B.M.

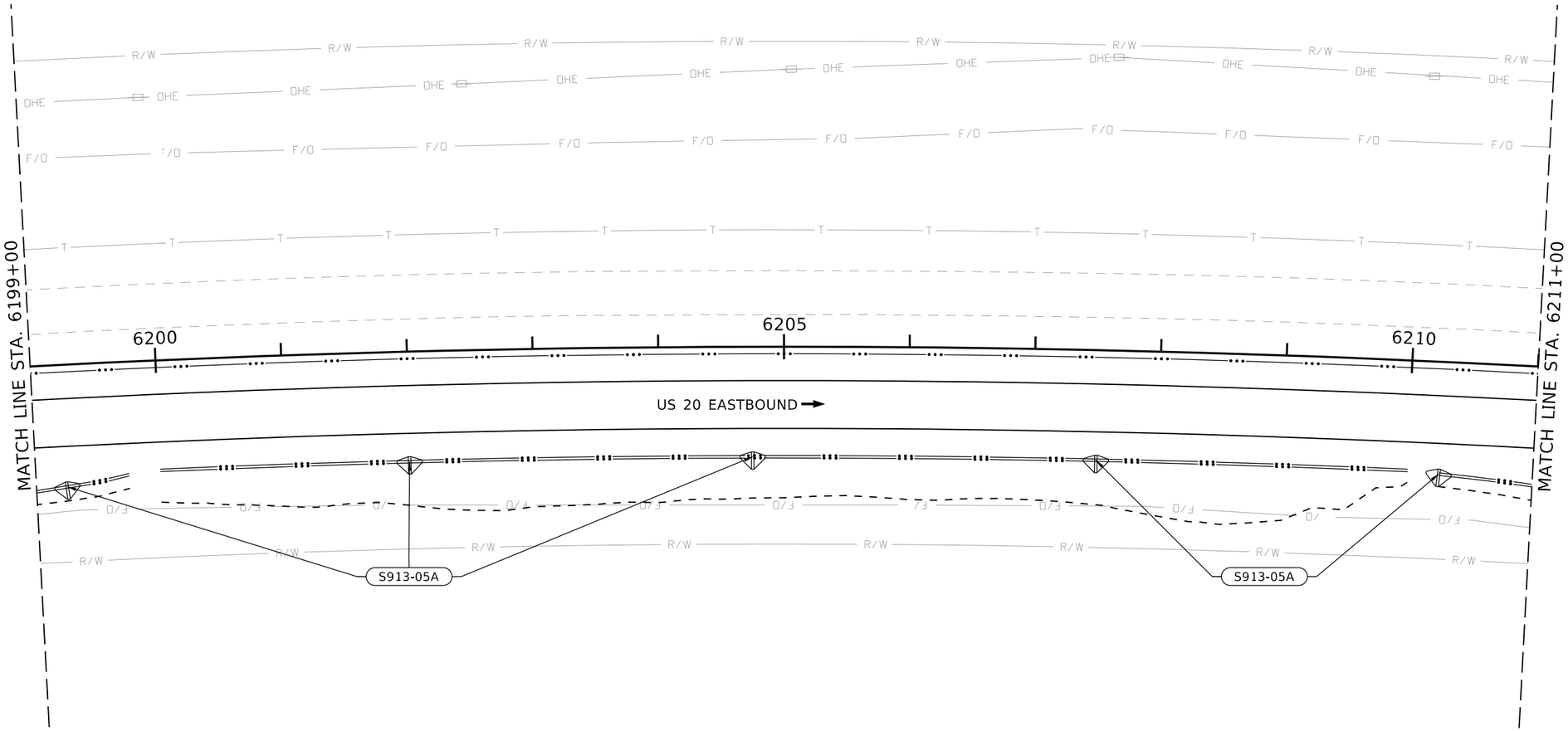

S913-05A	SP DITCH BERM
4.9 CY	STA. 6199+25, 97.18' RT
4.9 CY	STA. 6202+00, 87.59' RT
4.9 CY	STA. 6204+75, 87.60' RT
4.9 CY	STA. 6207+50, 87.59' RT
4.9 CY	STA. 6210+25, 89.36' RT

NOTES:

1. SEE SP DITCH BERM DETAIL FOR DITCH BERM DIMENSIONS.

Scale (Feet)

50 0 50 100

REVISIONS			
NO.	DATE	BY	DESCRIPTION

DESIGNED D. ABEDI
DESIGN CHECKED C. MCALISTER
DETAILED P. CONSALVO
DRAWING CHECKED C. MCALISTER

SCALES SHOWN ARE FOR 11" X 17" PRINTS ONLY

CADD FILE NAME 24149_Drpl_D201C.DGN

DRAWING DATE: November 21, 2025

IDAHO TRANSPORTATION DEPARTMENT
YOUR Safety→YOUR Mobility→YOUR Economic Opportunity

DAVID EVANS AND ASSOCIATES INC.

PROJECT NO.
A024(149)

DRAINAGE PLAN
US 20, BONNEVILLE COUNTY
LINE TO MP 291
STA. 6199+00 TO STA. 6211+00
PHASE 1

ENGLISH

COUNTY BINGHAM/BONNEVILLE

KEY NUMBER 24149

SHEET 220 OF 441

NOT APPROVED
INTERMEDIATE
FOR CONSTRUCTION

November 21, 2025 4:47:59 PM
pw://itd-pw.bentley.com:itd-pw-01/Documents/District 6/Projects/prj24394/Project_Development/Plan Sheets/Package 2 (KN 24149)/Drainage/24149_Drpl_D201C

T.3N., R.34E., B.M.

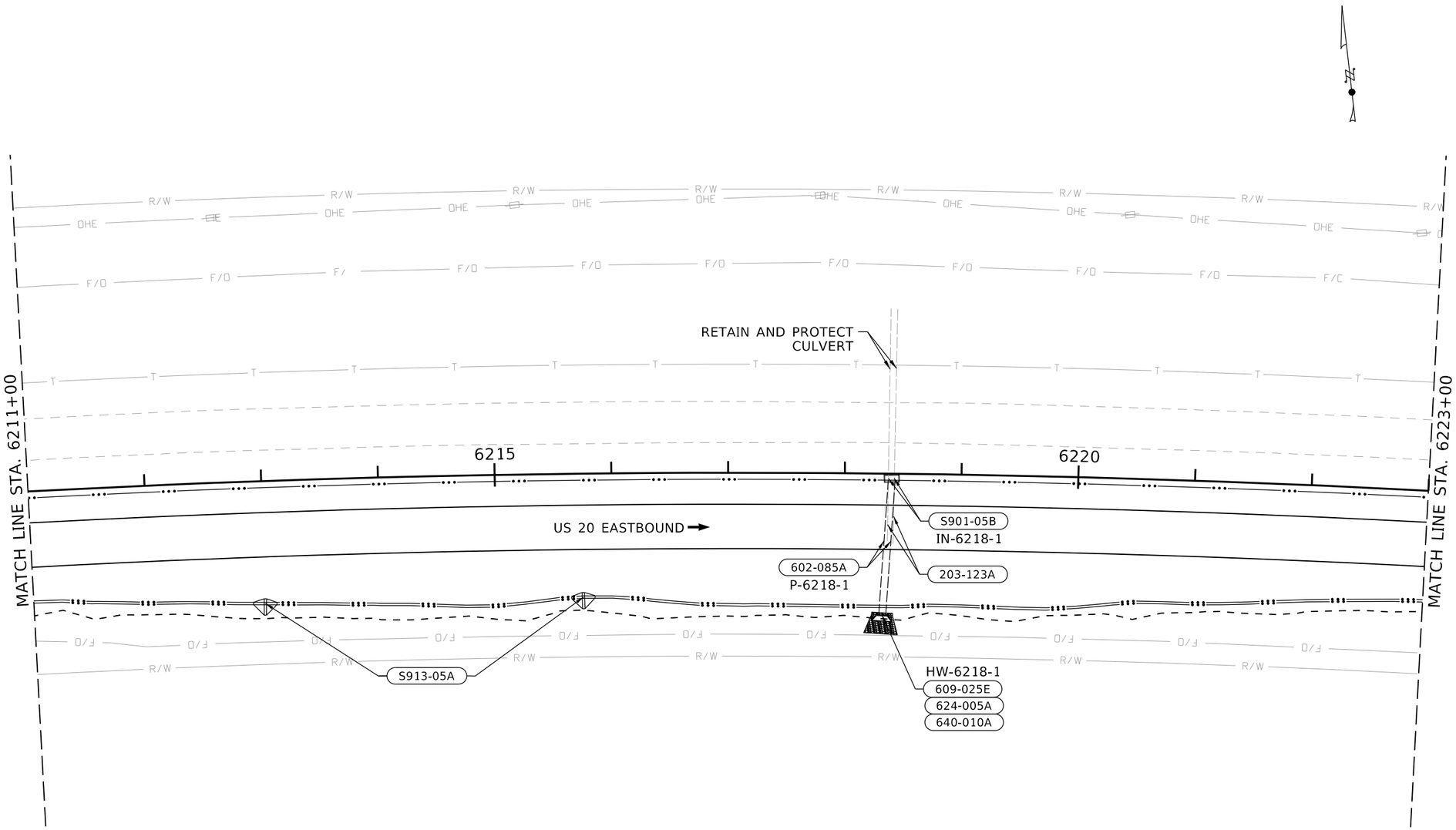

203-123A **REMOVAL OF MISCELLANEOUS ITEMS (PIPE)**
54 FT STA. 6218+37.03, 57.66' RT TO STA. 6218+37.28, 4.21' RT
56 FT STA. 6218+41.96, 60.07' RT TO STA. 6218+43.29, 4.07' RT

602-085A **48" PIPE CULVERT**
117 FT STA. 6218+30.34, 121.69' RT TO STA. 6218+37.21, 4.22' RT
117 FT STA. 6218+36.40, 122.05' RT TO STA. 6218+43.21, 4.06' RT

624-005A **LOOSE RIPRAP (CLASS I)**
25.2 CY STA. 6218+33.13, 121.23' RT

640-010A **RIPRAP/EROSION CONTROL GEOTEXTILE**
52 SY STA. 6218+33.13, 121.23' RT

S901-05A **SP MINOR STRUCTURES (DUAL 48" CONCRETE HEADWALL)**
1 EACH STA. 6218+33.13, 121.23' RT

S901-05B **SP CONC JUNCTION BOX**
1 EACH STA. 6218+40.21, 4.14' RT

S913-05A **SP DITCH BERM**
4.9 CY STA. 6213+00, 104.85' RT
4.9 CY STA. 6215+75, 105.82' RT

NOTES:

1. SEE SP DITCH BERM DETAIL FOR DITCH BERM DIMENSIONS.

2. IN PHASE 1, RETAIN AND PROTECT EXISTING CULVERTS. CONSTRUCT INLET OR JUNCTION BOX OVER EXISTING CULVERT, AND CONSTRUCT PROPOSED CULVERT UNDER PHASE 1 ROADWAY.

3. SEE PIPE COVER AND DAYLIGHT DETAILS FOR GRADING INFORMATION.

Scale (Feet)
50 0 50 100

REVISIONS			
NO.	DATE	BY	DESCRIPTION

DESIGNED D. ABEDI
DESIGN CHECKED C. MCALISTER
DETAILED P. CONSALVO
DRAWING CHECKED C. MCALISTER

SCALES SHOWN ARE FOR 11" X 17" PRINTS ONLY
CADD FILE NAME 24149_DrpI_D201C.DGN
DRAWING DATE: November 21, 2025

IDAHO TRANSPORTATION DEPARTMENT
YOUR Safety→YOUR Mobility→YOUR Economic Opportunity
DAVID EVANS AND ASSOCIATES INC.

PROJECT NO. A024(149)

DRAINAGE PLAN
US 20, BONNEVILLE COUNTY
LINE TO MP 291
STA. 6211+00 TO STA. 6223+00
PHASE 1

ENGLISH
COUNTY BINGHAM/BONNEVILLE
KEY NUMBER 24149
SHEET 221 OF 441

NOT APPROVED
INTERMEDIATE
FOR CONSTRUCTION

November 21, 2025 4:48:01 PM
pw://itd-pw.bentley.com:itd-pw-01/Documents/District 6/Projects/prj24394/Project_Development/Plan Sheets/Package 2 (KN 24149)/Drainage/24149_DrpI_D201C

T.3N., R.34E., B.M.

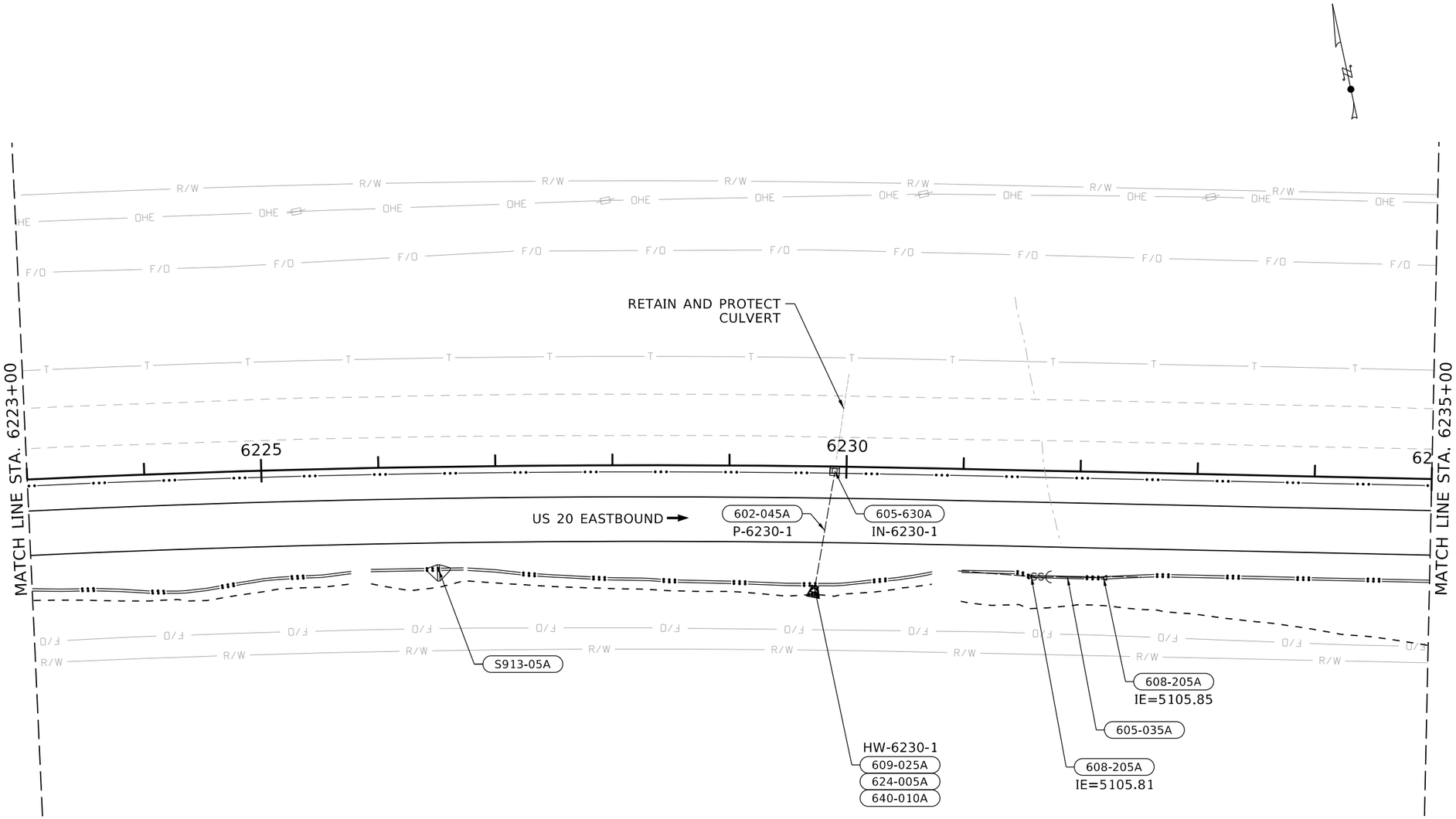

602-045A 24" PIPE CULVERT
109 FT STA. 6229+72.87, 111.16' RT TO STA. 6229+89.93, 3.65' RT

605-035A 18" STORM SEWER PIPE
62 FT STA. 6231+59.74, 90.61' RT TO STA. 6232+21.60, 90.39' RT

605-630A INLET TYPE 8
1 EACH STA. 6229+89.93, 3.65' RT

608-205A METAL SAFETY APRON (PARALLEL) (18")
1 EACH STA. 6231+59.74, 90.61' RT
1 EACH STA. 6232+21.60, 90.39' RT

609-025A MINOR STRUCTURES (24" CONCRETE HEADWALL)
1 EACH STA. 6229+72.87, 111.16' RT

624-005A LOOSE RIPRAP (CLASS I)
4.7 CY STA. 6229+72.87, 111.16' RT

640-010A RIPRAP/EROSION CONTROL GEOTEXTILE
14 SY STA. 6229+72.87, 111.16' RT

S913-05A SP DITCH BERM
4.9 CY STA. 6226+50, 87.62' RT

NOTES:

1. SEE SP DITCH BERM DETAIL FOR DITCH BERM DIMENSIONS.

2. IN PHASE 1, RETAIN AND PROTECT EXISTING CULVERTS. CONSTRUCT INLET OR JUNCTION BOX OVER EXISTING CULVERT, AND CONSTRUCT PROPOSED CULVERT UNDER PHASE 1 ROADWAY.

3. SEE PIPE COVER AND DAYLIGHT DETAILS FOR GRADING INFORMATION.

Scale (Feet)
50 0 50 100

REVISIONS			
NO.	DATE	BY	DESCRIPTION

DESIGNED D. ABEDI
DESIGN CHECKED C. MCALISTER
DETAILED P. CONSALVO
DRAWING CHECKED C. MCALISTER

SCALES SHOWN ARE FOR 11" X 17" PRINTS ONLY
CADD FILE NAME 24149_Drpl_D201C.DGN
DRAWING DATE: November 21, 2025

IDAHO TRANSPORTATION DEPARTMENT
YOUR Safety→YOUR Mobility→YOUR Economic Opportunity
DAVID EVANS AND ASSOCIATES INC.

PROJECT NO. A024(149)

DRAINAGE PLAN
US 20, BONNEVILLE COUNTY
LINE TO MP 291
STA. 6223+00 TO STA. 6235+00
PHASE 1

ENGLISH
COUNTY BINGHAM/BONNEVILLE
KEY NUMBER 24149
SHEET 222 OF 441

NOT APPROVED FOR CONSTRUCTION
INTERMEDIATE

November 21, 2025 4:48:03 PM
pw://itd-pw.bentley.com:itd-pw-01/Documents/District 6/Projects/prj24394/Project_Development/Plan Sheets/Package 2 (KN 24149)/Drainage/24149_Drpl_D201C

T.3N., R.34E., B.M.

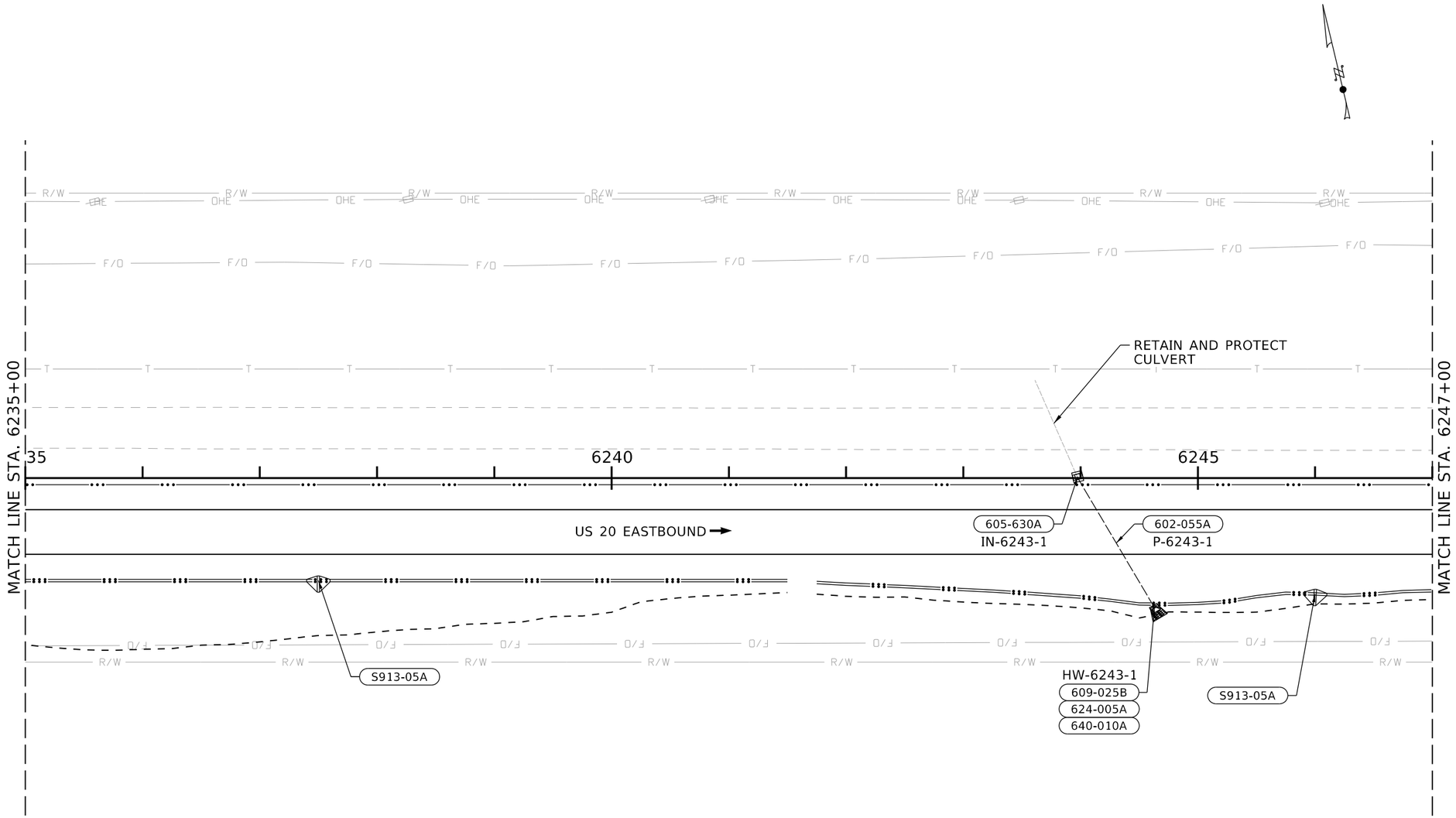

602-055A 126 FT	**30" PIPE CULVERT** STA. 6243+97.53, 1.14' LT TO STA. 6244+76.37, 118.64' RT
605-630A 1 EACH	**INLET TYPE 8** STA. 6243+97.53, 1.14' LT
609-025B 1 EACH	**MINOR STRUCTURES (30" CONCRETE HEADWALL)** STA. 6244+76.37, 118.64' RT
624-005A 7.3 CY	**LOOSE RIPRAP (CLASS I)** STA. 6244+76.37, 118.64' RT
640-010A 19 SY	**RIPRAP/EROSION CONTROL GEOTEXTILE** STA. 6244+76.37, 118.64' RT
S913-05A 4.9 CY 4.9 CY	**SP DITCH BERM** STA. 6237+50, 87.43' RT STA. 6246+00, 98.86' RT

NOTES:

1. SEE SP DITCH BERM DETAIL FOR DITCH BERM DIMENSIONS.

2. IN PHASE 1, RETAIN AND PROTECT EXISTING CULVERTS. CONSTRUCT INLET OR JUNCTION BOX OVER EXISTING CULVERT, AND CONSTRUCT PROPOSED CULVERT UNDER PHASE 1 ROADWAY.

3. SEE PIPE COVER AND DAYLIGHT DETAILS FOR GRADING INFORMATION.

Scale (Feet)
50 0 50 100

REVISIONS			
NO.	DATE	BY	DESCRIPTION

DESIGNED D. ABEDI
DESIGN CHECKED C. MCALISTER
DETAILED P. CONSALVO
DRAWING CHECKED C. MCALISTER

SCALES SHOWN ARE FOR 11" X 17" PRINTS ONLY
CADD FILE NAME 24149_DrpI_D201C.DGN
DRAWING DATE: November 21, 2025

IDAHO TRANSPORTATION DEPARTMENT
YOUR Safety→YOUR Mobility→YOUR Economic Opportunity
DAVID EVANS AND ASSOCIATES INC.

PROJECT NO. A024(149)

DRAINAGE PLAN
US 20, BONNEVILLE COUNTY
LINE TO MP 291
STA. 6235+00 TO STA. 6247+00
PHASE 1

ENGLISH
COUNTY BINGHAM/BONNEVILLE
KEY NUMBER 24149
SHEET 223 OF 441

NOT APPROVED
INTERMEDIATE
FOR CONSTRUCTION

November 21, 2025 4:48:06 PM
pw://itd-pw.bentley.com:itd-pw-01/Documents/District 6/Projects/prj24394/Project_Development/Plan Sheets/Package 2 (KN 24149)/Drainage/24149_DrpI_D201C

T.3N., R.34E., B.M.

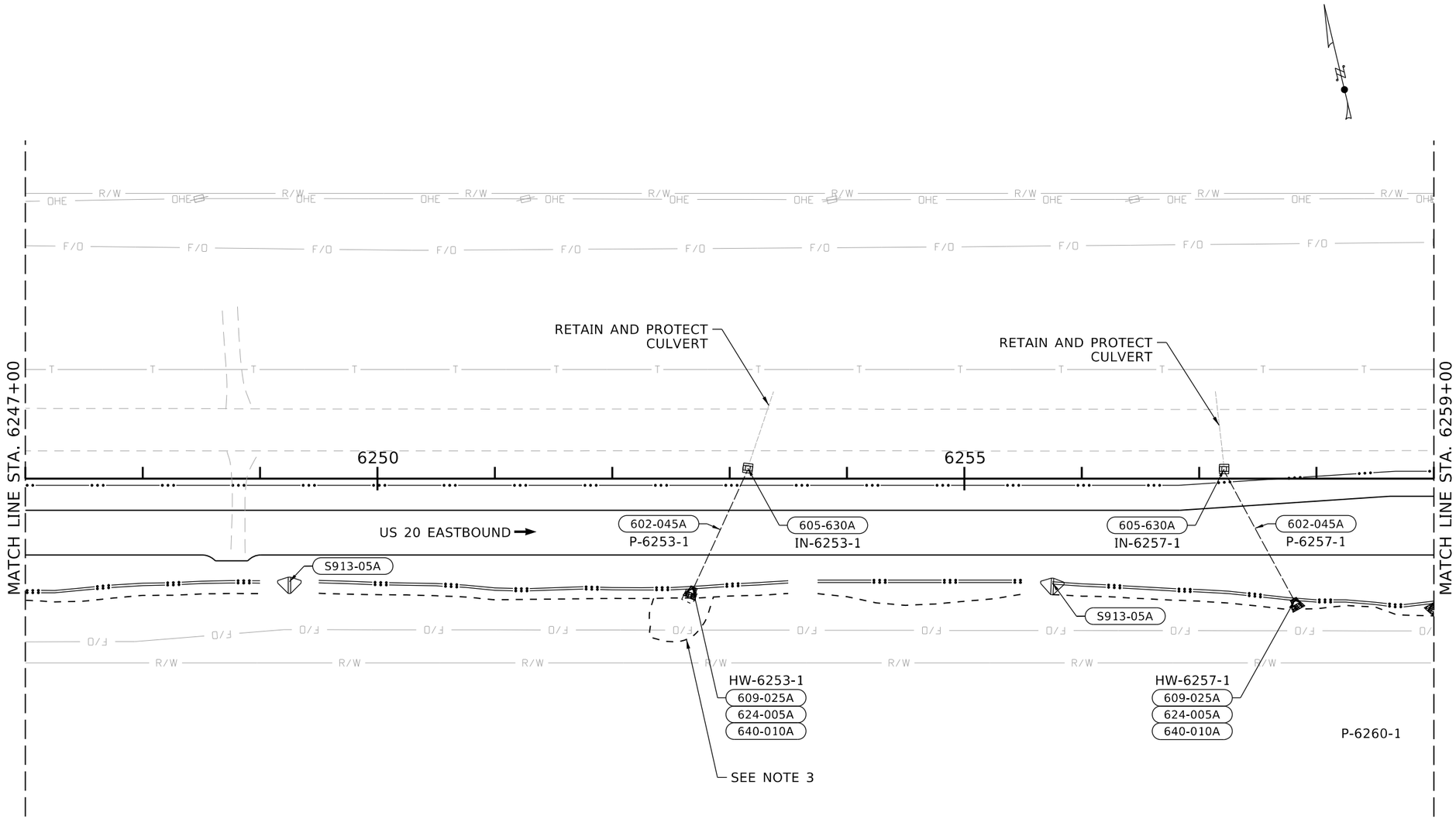

602-045A	**24" PIPE CULVERT**
112 FT	STA. 6252+63.53, 106.20' RT TO STA. 6253+15.47, 8.89' LT
126 FT	STA. 6257+21.29, 8.23' LT TO STA. 6257+89.71, 119.89' RT
605-630A	**INLET TYPE 8**
1 EACH	STA. 6253+15.47, 8.89' LT
1 EACH	STA. 6257+21.29, 8.23' LT
609-025A	**MINOR STRUCTURES (24" CONCRETE HEADWALL)**
1 EACH	STA. 6252+63.53, 106.20' RT
1 EACH	STA. 6257+89.71, 119.89' RT
624-005A	**LOOSE RIPRAP (CLASS I)**
4.7 CY	STA. 6252+63.53, 106.20' RT
4.7 CY	STA. 6257+89.71, 119.89' RT
640-010A	**RIPRAP/EROSION CONTROL GEOTEXTILE**
14 SY	STA. 6252+63.53, 106.20' RT
14 SY	STA. 6257+89.71, 119.89' RT
S913-05A	**SP DITCH BERM**
4.9 CY	STA. 6249+25, 87.85' RT
4.9 CY	STA. 6255+75, 88.81' RT

NOTES:

1. SEE SP DITCH BERM DETAIL FOR DITCH BERM DIMENSIONS.
2. IN PHASE 1, RETAIN AND PROTECT EXISTING CULVERTS. CONSTRUCT INLET OR JUNCTION BOX OVER EXISTING CULVERT, AND CONSTRUCT PROPOSED CULVERT UNDER PHASE 1 ROADWAY.
3. SEE PIPE COVER AND DAYLIGHT DETAILS FOR GRADING INFORMATION.

Scale (Feet)
50 0 50 100

REVISIONS			
NO.	DATE	BY	DESCRIPTION

DESIGNED D. ABEDI
DESIGN CHECKED C. MCALISTER
DETAILED P. CONSALVO
DRAWING CHECKED C. MCALISTER

SCALES SHOWN ARE FOR 11" X 17" PRINTS ONLY
CADD FILE NAME 24149_DrpI_D201C.DGN
DRAWING DATE: November 21, 2025

IDAHO TRANSPORTATION DEPARTMENT
YOUR Safety→YOUR Mobility→YOUR Economic Opportunity
DAVID EVANS AND ASSOCIATES INC.

PROJECT NO. A024(149)

DRAINAGE PLAN
US 20, BONNEVILLE COUNTY
LINE TO MP 291
STA. 6247+00 TO STA. 6259+00
PHASE 1

ENGLISH
COUNTY BINGHAM/BONNEVILLE
KEY NUMBER 24149
SHEET 224 OF 441

NOT APPROVED
INTERMEDIATE
FOR CONSTRUCTION

November 21, 2025 4:48:08 PM
pw://itd-pw.bentley.com:itd-pw-01/Documents/District 6/Projects/prj24394/Project_Development/Plan Sheets/Package 2 (KN 24149)/Drainage/24149_DrpI_D201C.dgn

T.3N., R.34E., B.M.

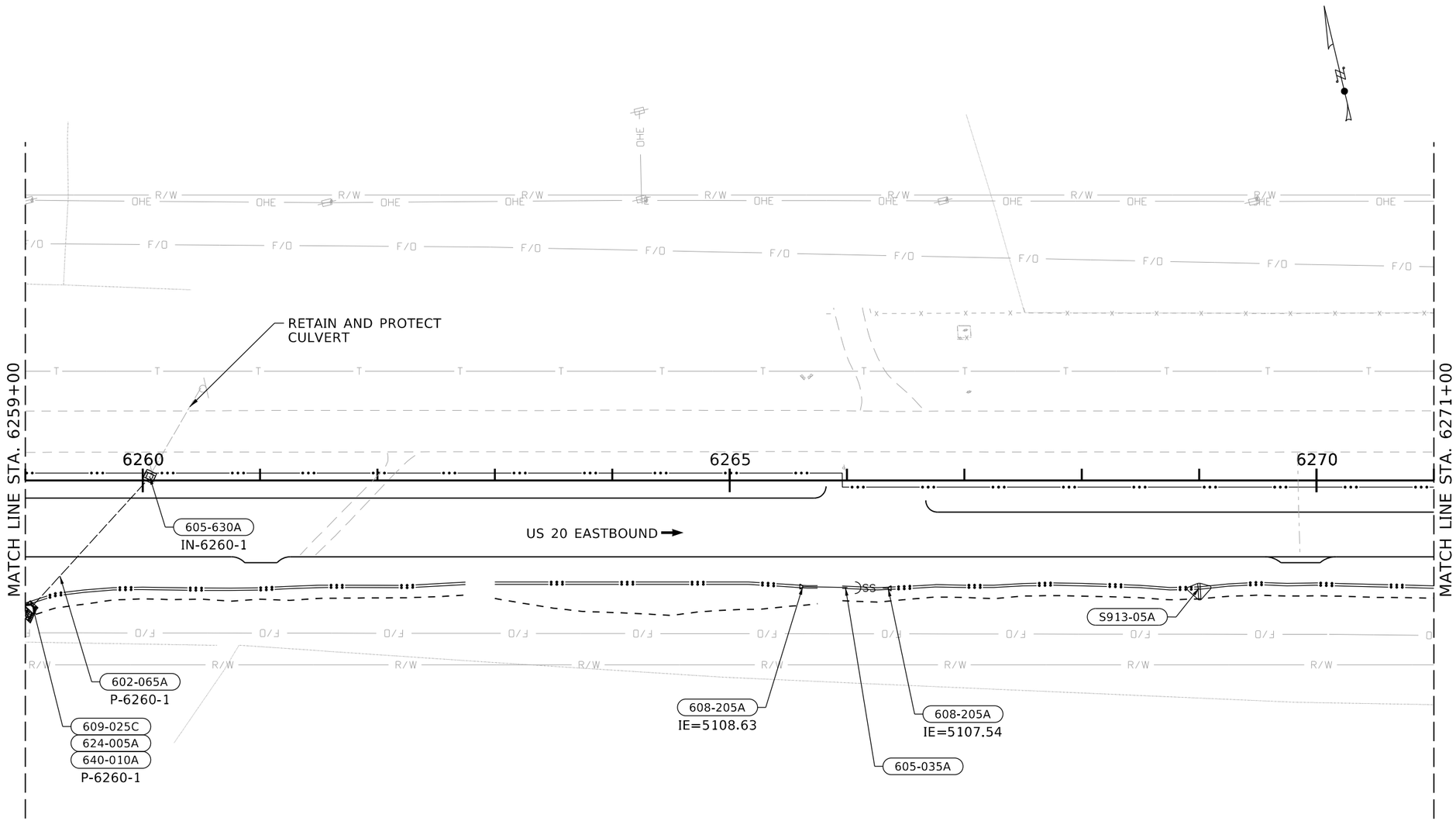

602-065A 147 FT	**36" PIPE CULVERT** STA. 6259+00.00, 113.54' LT TO STA. 6260+06.67, 3.32' LT
605-035A 73 FT	**18" STORM SEWER PIPE** STA. 6265+62.35, 90.37' RT TO STA. 6266+35.10, 91.81' RT
605-630A 1 EACH	**INLET TYPE 8** STA. 6260+06.44, 2.79' LT
608-205A 1 EACH 1 EACH	**METAL SAFETY APRON (PARALLEL) (18")** STA. 6265+62.35, 90.37' RT STA. 6266+35.10, 91.81' RT
609-025C 1 EACH	**MINOR STRUCTURES (36" CONCRETE HEADWALL)** STA. 6259+06.20, 106.85' RT
624-005A 10.4 CY	**LOOSE RIPRAP (CLASS I)** STA. 6259+06.20, 106.85' RT
640-010A 25 SY	**RIPRAP/EROSION CONTROL GEOTEXTILE** STA. 6259+06.20, 106.85' RT
S913-05A 4.9 CY	**SP DITCH BERM** STA. 6269+00, 91.60' RT

NOTES:

1. SEE SP DITCH BERM DETAIL FOR DITCH BERM DIMENSIONS.
2. IN PHASE 1, RETAIN AND PROTECT EXISTING CULVERTS. CONSTRUCT INLET OR JUNCTION BOX OVER EXISTING CULVERT, AND CONSTRUCT PROPOSED CULVERT UNDER PHASE 1 ROADWAY.
3. SEE PIPE COVER AND DAYLIGHT DETAILS FOR GRADING INFORMATION.

Scale (Feet)
50 0 50 100

REVISIONS			
NO.	DATE	BY	DESCRIPTION

DESIGNED D. ABEDI	SCALES SHOWN ARE FOR 11" X 17" PRINTS ONLY	IDAHO TRANSPORTATION DEPARTMENT YOUR Safety→YOUR Mobility→YOUR Economic Opportunity DAVID EVANS AND ASSOCIATES INC.
DESIGN CHECKED C. MCALISTER		
DETAILED P. CONSALVO	CADD FILE NAME 24149_DrpI_D201C.DGN	
DRAWING CHECKED C. MCALISTER	DRAWING DATE: November 21, 2025	

PROJECT NO.	DRAINAGE PLAN	
A024(149)	US 20, BONNEVILLE COUNTY LINE TO MP 291 STA. 6259+00 TO STA. 6271+00 PHASE 1	*ENGLISH* COUNTY BINGHAM/BONNEVILLE KEY NUMBER 24149 SHEET 225 OF 441

NOT APPROVED
INTERMEDIATE
FOR CONSTRUCTION

November 21, 2025 4:48:09 PM
pw://itd-pw.bentley.com:itd-pw-01/Documents/District 6/Projects/prj24394/Project_Development/Plan Sheets/Package 2 (KN 24149)/Drainage/24149_DrpI_D201C

T.3N., R.34E., B.M.

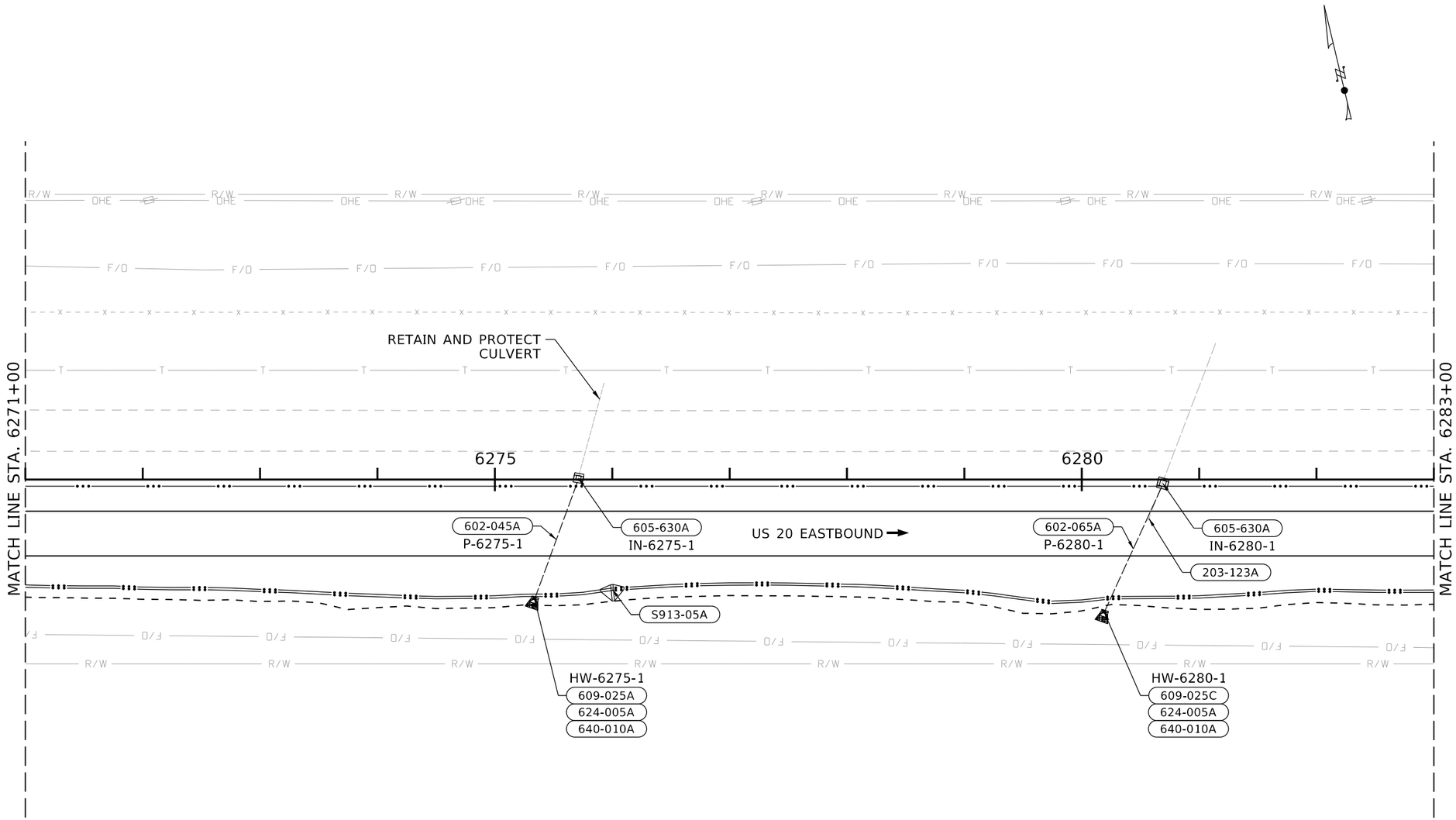

203-123A	**REMOVAL OF MISCELLANEOUS ITEMS (PIPE)**	
35 FT	STA. 6280+56.33, 35.25' RT TO STA. 6280+69.08, 3.26' RT	
602-045A	**24" PIPE CULVERT**	
109 FT	STA. 6275+28.76, 114.61' RT TO STA. 6275+71.24, 1.27' LT	
602-065A	**36" PIPE CULVERT**	
119 FT	STA. 6280+19.31, 113.31' RT TO STA. 6280+69.08, 3.26' RT	
605-630A	**INLET TYPE 8**	
1 EACH	STA. 6275+71.24, 1.27' LT	
1 EACH	STA. 6280+69.08, 3.26' RT	
609-025A	**MINOR STRUCTURES (24" CONCRETE HEADWALL)**	
1 EACH	STA. 6275+28.76, 114.61' RT	
609-025C	**MINOR STRUCTURES (36" CONCRETE HEADWALL)**	
1 EACH	STA. 6280+19.31, 113.31' RT	
624-005A	**LOOSE RIPRAP (CLASS I)**	
4.7 CY	STA. 6275+28.76, 114.61' RT	
10.4 CY	STA. 6280+19.31, 113.31' RT	
640-010A	**RIPRAP/EROSION CONTROL GEOTEXTILE**	
14 SY	STA. 6275+28.76, 114.61' RT	
25 SY	STA. 6280+19.31, 113.31' RT	
S913-05A	**SP DITCH BERM**	
4.9 CY	STA. 6276+00, 93.44' RT	

NOTES:

1. SEE SP DITCH BERM DETAIL FOR DITCH BERM DIMENSIONS.
2. IN PHASE 1, RETAIN AND PROTECT EXISTING CULVERTS. CONSTRUCT INLET OR JUNCTION BOX OVER EXISTING CULVERT, AND CONSTRUCT PROPOSED CULVERT UNDER PHASE 1 ROADWAY.
3. SEE PIPE COVER AND DAYLIGHT DETAILS FOR GRADING INFORMATION.

Scale (Feet)
50 0 50 100

REVISIONS			
NO.	DATE	BY	DESCRIPTION

DESIGNED D. ABEDI
DESIGN CHECKED C. MCALISTER
DETAILED P. CONSALVO
DRAWING CHECKED C. MCALISTER

SCALES SHOWN ARE FOR 11" X 17" PRINTS ONLY
CADD FILE NAME 24149_DrpI_D201C.DGN
DRAWING DATE: November 21, 2025

IDAHO TRANSPORTATION DEPARTMENT
YOUR Safety→YOUR Mobility→YOUR Economic Opportunity
DAVID EVANS AND ASSOCIATES INC.

PROJECT NO. A024(149)

DRAINAGE PLAN
US 20, BONNEVILLE COUNTY
LINE TO MP 291
STA. 6271+00 TO STA. 6283+00
PHASE 1

ENGLISH
COUNTY BINGHAM/BONNEVILLE
KEY NUMBER 24149
SHEET 226 OF 441

NOT APPROVED
INTERMEDIATE
FOR CONSTRUCTION

November 21, 2025 4:48:11 PM
pw://itd-pw.bentley.com:itd-pw-01/Documents/District 6/Projects/prj24394/Project_Development/Plan Sheets/Package 2 (KN 24149)/Drainage/24149_DrpI_D201C

T.3N., R.34E., B.M.

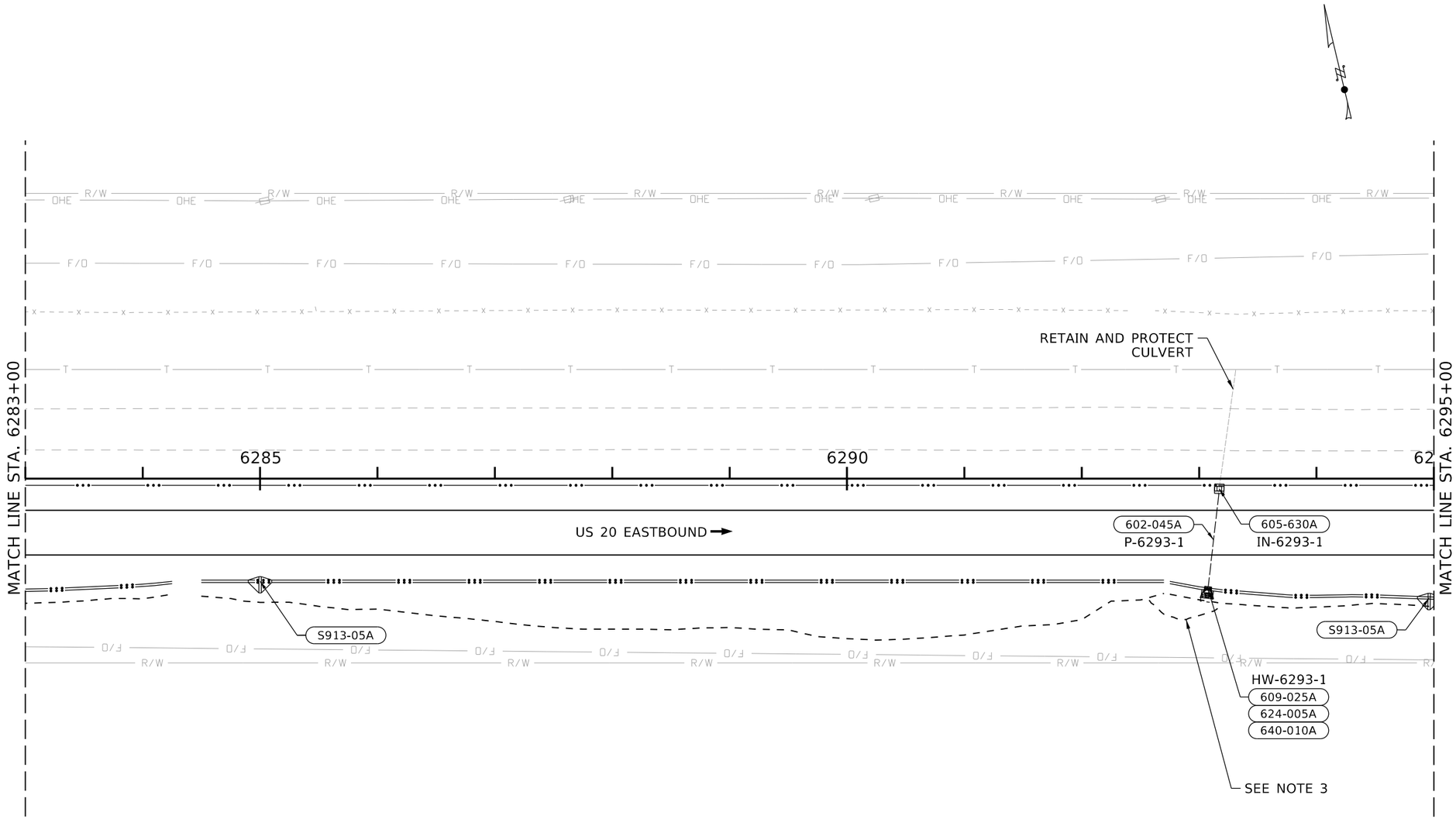

602-045A **24" PIPE CULVERT**
85 FT STA. 6293+05.93, 102.97' RT TO STA. 6293+17.18, 8.61' RT

605-630A **INLET TYPE 8**
1 EACH STA. 6293+17.18, 8.61' RT

609-025A **MINOR STRUCTURES (24" CONCRETE HEADWALL)**
1 EACH STA. 6293+05.93, 102.97' RT

624-005A **LOOSE RIPRAP (CLASS I)**
4.7 CY STA. 6293+05.93, 102.97' RT

640-010A **RIPRAP/EROSION CONTROL GEOTEXTILE**
14 SY STA. 6293+05.93, 102.97' RT

S913-05A **SP DITCH BERM**
4.9 CY STA. 6285+00, 87.43' RT
4.9 CY STA. 6294+96, 101.67' RT

NOTES:

1. SEE SP DITCH BERM DETAIL FOR DITCH BERM DIMENSIONS.

2. IN PHASE 1, RETAIN AND PROTECT EXISTING CULVERTS. CONSTRUCT INLET OR JUNCTION BOX OVER EXISTING CULVERT, AND CONSTRUCT PROPOSED CULVERT UNDER PHASE 1 ROADWAY.

3. SEE PIPE COVER AND DAYLIGHT DETAILS FOR GRADING INFORMATION.

Scale (Feet)
50 0 50 100

NOT APPROVED
INTERMEDIATE
FOR CONSTRUCTION

REVISIONS			
NO.	DATE	BY	DESCRIPTION

DESIGNED D. ABEDI
DESIGN CHECKED C. MCALISTER
DETAILED P. CONSALVO
DRAWING CHECKED C. MCALISTER

SCALES SHOWN ARE FOR 11" X 17" PRINTS ONLY
CADD FILE NAME 24149_DrpI_D201C.DGN
DRAWING DATE: November 21, 2025

IDAHO TRANSPORTATION DEPARTMENT
YOUR Safety→YOUR Mobility→YOUR Economic Opportunity
DAVID EVANS AND ASSOCIATES INC.

PROJECT NO. A024(149)

DRAINAGE PLAN
US 20, BONNEVILLE COUNTY
LINE TO MP 291
STA. 6283+00 TO STA. 6295+00
PHASE 1

ENGLISH
COUNTY BINGHAM/BONNEVILLE
KEY NUMBER 24149
SHEET 227 OF 441

November 21, 2025 4:48:14 PM
pw://itd-pw.bentley.com:itd-pw-01/Documents/District 6/Projects/prj24394/Project_Development/Plan Sheets/Package 2 (KN 24149)/Drainage/24149_DrpI_D201C

T.3N., R.34E., B.M.

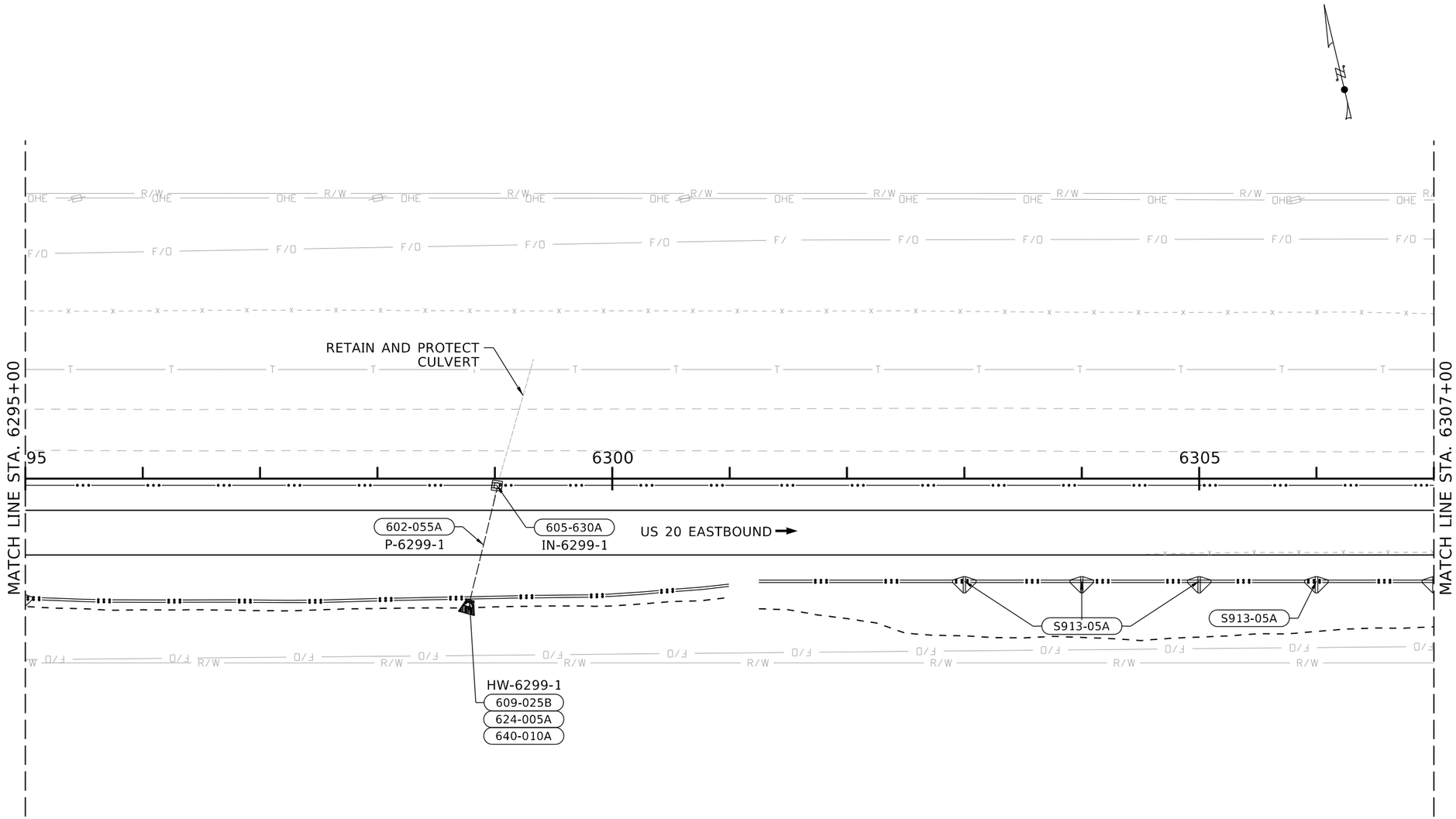

602-055A **30" PIPE CULVERT**
101 FT STA. 6298+75.26, 117.32' RT TO STA. 6299+01.76, 5.98' RT

605-630A **INLET TYPE 8**
1 EACH STA. 6299+01.76, 5.98' RT

609-025B **MINOR STRUCTURES (30" CONCRETE HEADWALL)**
1 EACH STA. 6298+75.26, 117.32' RT

624-005A **LOOSE RIPRAP (CLASS I)**
7.3 CY STA. 6298+75.26, 117.32' RT

640-010A **RIPRAP/EROSION CONTROL GEOTEXTILE**
19 SY STA. 6298+75.26, 117.32' RT

S913-05A **SP DITCH BERM**
4.9 CY STA. 6303+00, 87.43' RT
4.9 CY STA. 6304+00, 87.43' RT
4.9 CY STA. 6305+00, 87.43' RT
4.9 CY STA. 6306+00, 87.43' RT

NOTES:

1. SEE SP DITCH BERM DETAIL FOR DITCH BERM DIMENSIONS.

2. IN PHASE 1, RETAIN AND PROTECT EXISTING CULVERTS. CONSTRUCT INLET OR JUNCTION BOX OVER EXISTING CULVERT, AND CONSTRUCT PROPOSED CULVERT UNDER PHASE 1 ROADWAY.

3. SEE PIPE COVER AND DAYLIGHT DETAILS FOR GRADING INFORMATION.

Scale (Feet)
50 0 50 100

REVISIONS			
NO.	DATE	BY	DESCRIPTION

DESIGNED D. ABEDI
DESIGN CHECKED C. MCALISTER
DETAILED P. CONSALVO
DRAWING CHECKED C. MCALISTER

SCALES SHOWN ARE FOR 11" X 17" PRINTS ONLY
CADD FILE NAME 24149_DrpI_D201C.DGN
DRAWING DATE: November 21, 2025

IDAHO TRANSPORTATION DEPARTMENT
YOUR Safety→YOUR Mobility→YOUR Economic Opportunity
DAVID EVANS AND ASSOCIATES INC.

PROJECT NO. A024(149)

DRAINAGE PLAN
US 20, BONNEVILLE COUNTY
LINE TO MP 291
STA. 6295+00 TO STA. 6307+00
PHASE 1

ENGLISH
COUNTY BINGHAM/BONNEVILLE
KEY NUMBER 24149
SHEET 228 OF 441

NOT APPROVED
INTERMEDIATE
FOR CONSTRUCTION

November 21, 2025 4:48:16 PM
pw://itd-pw.bentley.com:itd-pw-01/Documents/District 6/Projects/prj24394/Project_Development/Plan Sheets/Package 2 (KN 24149)/Drainage/24149_DrpI_D201C

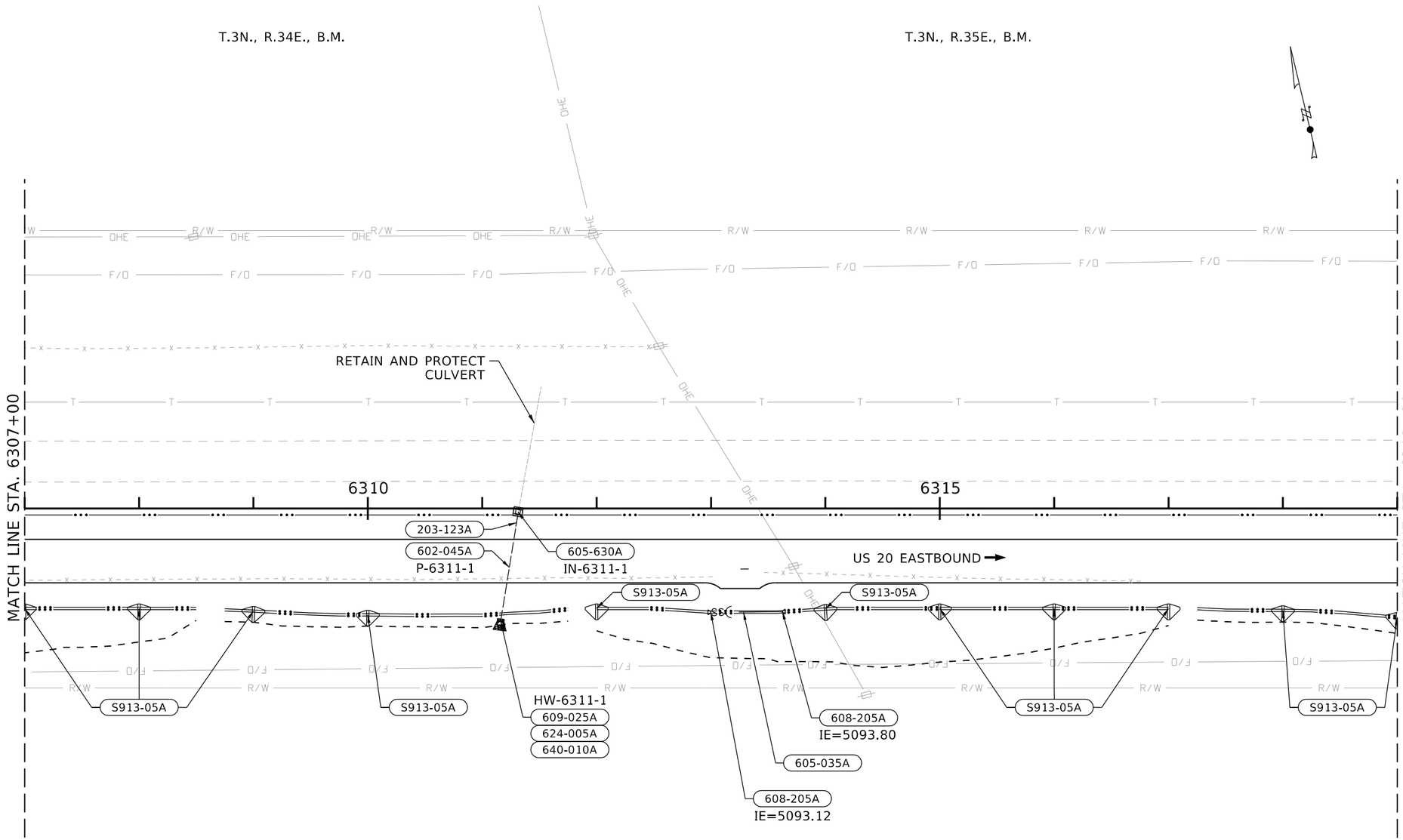

203-123A	**REMOVAL OF MISCELLANEOUS ITEMS (PIPE)**
15 FT	STA. 6311+28.90, 17.67' RT TO STA. 6311+31.24, 2.90' RT
602-045A	**24" PIPE CULVERT**
96 FT	STA. 6311+16.12, 98.58' RT TO STA. 6311+31.24, 2.90' RT
605-035A	**18" STORM SEWER PIPE**
63 FT	STA. 6312+99.83, 90.77' RT TO STA. 6313+62.41, 90.20' RT
605-630A	**INLET TYPE 8**
1 EACH	STA. 6311+31.24, 2.90' RT
608-205A	**METAL SAFETY APRON (PARALLEL) (18")**
1 EACH	STA. 6312+99.83, 90.77' RT
1 EACH	STA. 6313+62.41, 90.20' RT
609-025A	**MINOR STRUCTURES (24" CONCRETE HEADWALL)**
1 EACH	STA. 6311+16.12, 98.58' RT
624-005A	**LOOSE RIPRAP (CLASS I)**
4.7 CY	STA. 6311+16.12, 98.58' RT
640-010A	**RIPRAP/EROSION CONTROL GEOTEXTILE**
14 SY	STA. 6311+16.12, 98.58' RT
S913-05A	**SP DITCH BERM**
4.9 CY	STA. 6307+00, 87.43' RT
4.9 CY	STA. 6308+00, 87.43' RT
4.9 CY	STA. 6309+00, 89.71' RT
4.9 CY	STA. 6310+00, 93.00' RT
4.9 CY	STA. 6312+00, 87.43' RT
4.9 CY	STA. 6314+00, 87.97' RT
4.9 CY	STA. 6315+00, 87.43' RT
4.9 CY	STA. 6316+00, 87.43' RT
4.9 CY	STA. 6317+00, 87.43' RT
4.9 CY	STA. 6318+00, 89.07' RT
4.9 CY	STA. 6319+00, 95.09' RT

NOTES:

1. SEE SP DITCH BERM DETAIL FOR DITCH BERM DIMENSIONS.

2. IN PHASE 1, RETAIN AND PROTECT EXISTING CULVERTS. CONSTRUCT INLET OR JUNCTION BOX OVER EXISTING CULVERT, AND CONSTRUCT PROPOSED CULVERT UNDER PHASE 1 ROADWAY.

3. SEE PIPE COVER AND DAYLIGHT DETAILS FOR GRADING INFORMATION.

Scale (Feet)
50 0 50 100

REVISIONS			
NO.	DATE	BY	DESCRIPTION

DESIGNED D. ABEDI
DESIGN CHECKED C. MCALISTER
DETAILED P. CONSALVO
DRAWING CHECKED C. MCALISTER

SCALES SHOWN ARE FOR 11" X 17" PRINTS ONLY
CADD FILE NAME 24149_DrpI_D201C.DGN
DRAWING DATE: November 21, 2025

IDAHO TRANSPORTATION DEPARTMENT
YOUR Safety→YOUR Mobility→YOUR Economic Opportunity
DAVID EVANS AND ASSOCIATES INC.

PROJECT NO. A024(149)

DRAINAGE PLAN
US 20, BONNEVILLE COUNTY
LINE TO MP 291
STA. 6307+00 TO STA. 6319+00
PHASE 1

ENGLISH
COUNTY BINGHAM/BONNEVILLE
KEY NUMBER 24149
SHEET 229 OF 441

NOT APPROVED
INTERMEDIATE
FOR CONSTRUCTION

November 21, 2025 4:48:19 PM
pw://itd-pw.bentley.com:itd-pw-01/Documents/District 6/Projects/prj24394/Project_Development/Plan Sheets/Package 2 (KN 24149)/Drainage/24149_DrpI_D201C

T.3N., R.35E., B.M.

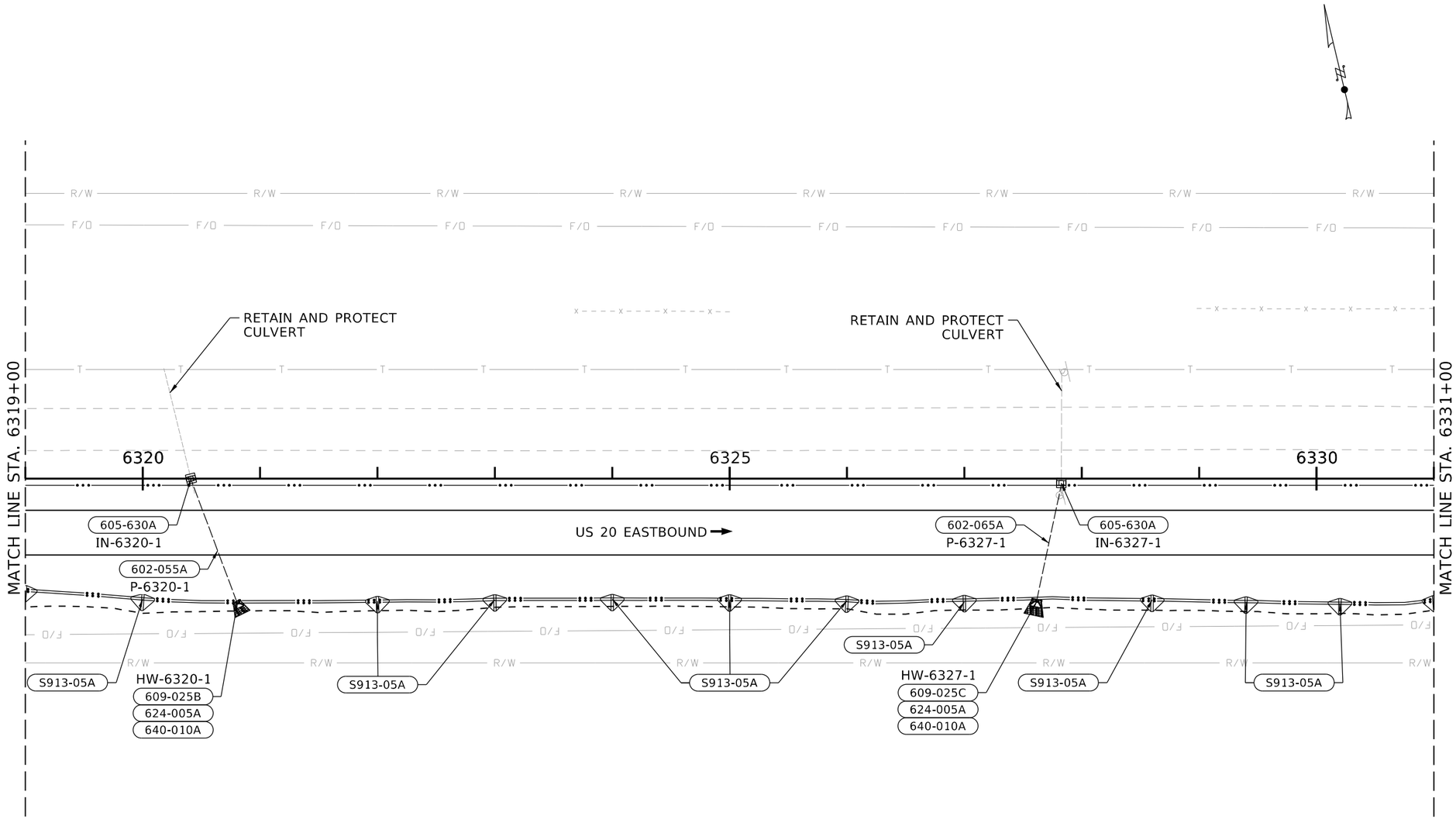

602-055A	**30" PIPE CULVERT**
112 FT	STA. 6320+41.14, 0.00' RT TO STA. 6320+80.64, 106.31' RT
602-065A	**36" PIPE CULVERT**
102 FT	STA. 6327+61.61, 104.70' RT TO STA. 6327+82.53, 3.73' RT
605-630A	**INLET TYPE 8**
1 EACH	STA. 6320+41.14, 0.00'
1 EACH	STA. 6327+82.53, 3.73' RT
609-025B	**MINOR STRUCTURES (30" CONCRETE HEADWALL)**
1 EACH	STA. 6320+80.64, 106.31' RT
609-025C	**MINOR STRUCTURES (36" CONCRETE HEADWALL)**
1 EACH	STA. 6327+61.61, 104.70' RT
624-005A	**LOOSE RIPRAP (CLASS I)**
7.3 CY	STA. 6320+80.64, 106.31' RT
10.4 CY	STA. 6327+61.61, 104.70' RT
640-010A	**RIPRAP/EROSION CONTROL GEOTEXTILE**
19 SY	STA. 6320+80.64, 106.31' RT
25 SY	STA. 6327+61.61, 104.70' RT
S913-05A	**SP DITCH BERM**
4.9 CY	STA. 6320+00, 102.40' RT
4.9 CY	STA. 6322+00, 104.35' RT
4.9 CY	STA. 6323+00, 102.86' RT
4.9 CY	STA. 6324+00, 102.56' RT
4.9 CY	STA. 6325+00, 102.89' RT
4.9 CY	STA. 6326+00, 103.92' RT
4.9 CY	STA. 6327+00, 103.45' RT
4.9 CY	STA. 6328+60, 103.22' RT
4.9 CY	STA. 6329+40, 104.71' RT
4.9 CY	STA. 6330+20, 106.12' RT

NOTES:

1. SEE SP DITCH BERM DETAIL FOR DITCH BERM DIMENSIONS.

2. IN PHASE 1, RETAIN AND PROTECT EXISTING CULVERTS. CONSTRUCT INLET OR JUNCTION BOX OVER EXISTING CULVERT, AND CONSTRUCT PROPOSED CULVERT UNDER PHASE 1 ROADWAY.

3. SEE PIPE COVER AND DAYLIGHT DETAILS FOR GRADING INFORMATION.

Scale (Feet)
50 0 50 100

REVISIONS			
NO.	DATE	BY	DESCRIPTION

DESIGNED D. ABEDI	SCALES SHOWN ARE FOR 11" X 17" PRINTS ONLY
DESIGN CHECKED C. MCALISTER	
DETAILED P. CONSALVO	CADD FILE NAME 24149_DrpI_D201D.DGN
DRAWING CHECKED C. MCALISTER	DRAWING DATE: November 21, 2025

IDAHO TRANSPORTATION DEPARTMENT
YOUR Safety→YOUR Mobility→YOUR Economic Opportunity
DAVID EVANS AND ASSOCIATES INC.

PROJECT NO.	DRAINAGE PLAN	ENGLISH
A024(149)	US 20, BONNEVILLE COUNTY LINE TO MP 291 STA. 6319+00 TO STA. 6331+00 PHASE 1	COUNTY BINGHAM/BONNEVILLE KEY NUMBER 24149 SHEET 230 OF 441

NOT APPROVED FOR INTERMEDIATE CONSTRUCTION

November 21, 2025 4:48:38 PM
pw://itd-pw.bentley.com:itd-pw-01/Documents/District 6/Projects/prj24394/Project_Development/Plan Sheets/Package 2 (KN 24149)/Drainage/24149_DrpI_D201D

T.3N., R.35E., B.M.

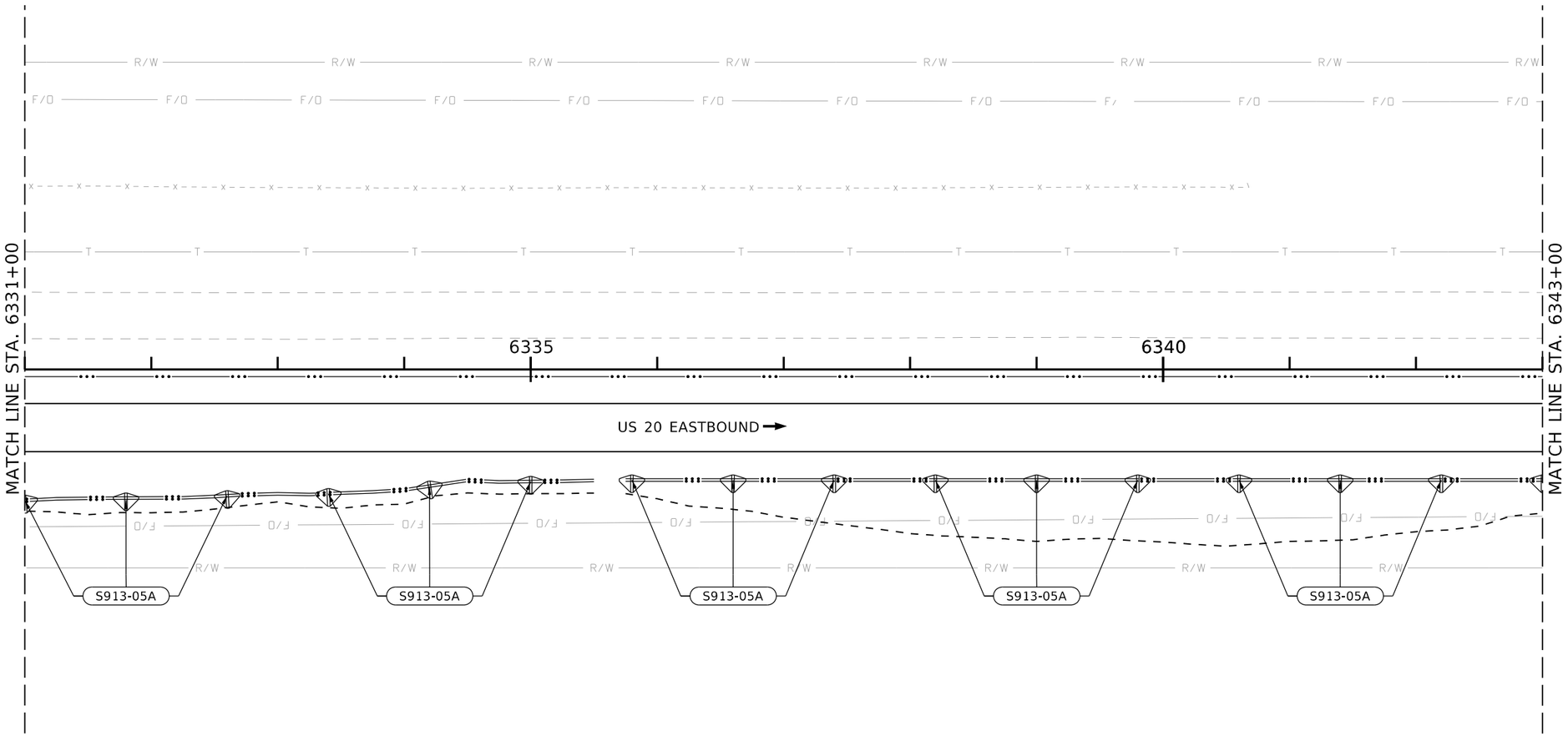

S913-05A	SP DITCH BERM
4.9 CY	STA. 6331+00, 103.58' RT
4.9 CY	STA. 6331+80, 101.74' RT
4.9 CY	STA. 6332+60, 99.89' RT
4.9 CY	STA. 6333+40, 98.23' RT
4.9 CY	STA. 6334+20, 92.33' RT
4.9 CY	STA. 6335+00, 88.58' RT
4.9 CY	STA. 6335+80, 87.43' RT
4.9 CY	STA. 6336+60, 87.43' RT
4.9 CY	STA. 6337+40, 87.43' RT
4.9 CY	STA. 6338+20, 87.43' RT
4.9 CY	STA. 6339+00, 87.43' RT
4.9 CY	STA. 6339+80, 87.43' RT
4.9 CY	STA. 6340+60, 87.43' RT
4.9 CY	STA. 6341+40, 87.43' RT
4.9 CY	STA. 6342+20, 87.43' RT

NOTES:

1. SEE SP DITCH BERM DETAIL FOR DITCH BERM DIMENSIONS.

Scale (Feet)
50 0 50 100

REVISIONS			
NO.	DATE	BY	DESCRIPTION

DESIGNED D. ABEDI
DESIGN CHECKED C. MCALISTER
DETAILED P. CONSALVO
DRAWING CHECKED C. MCALISTER

SCALES SHOWN ARE FOR 11" X 17" PRINTS ONLY
CADD FILE NAME 24149_DrpI_D201D.DGN
DRAWING DATE: November 21, 2025

IDAHO TRANSPORTATION DEPARTMENT
YOUR Safety→YOUR Mobility→YOUR Economic Opportunity
DAVID EVANS AND ASSOCIATES INC.

PROJECT NO. A024(149)

DRAINAGE PLAN
US 20, BONNEVILLE COUNTY
LINE TO MP 291
STA. 6331+00 TO STA. 6343+00
PHASE 1

ENGLISH
COUNTY BINGHAM/BONNEVILLE
KEY NUMBER 24149
SHEET 231 OF 441

NOT APPROVED
INTERMEDIATE
FOR CONSTRUCTION

November 21, 2025 4:48:41 PM
pw://itd-pw.bentley.com:itd-pw-01/Documents/District 6/Projects/prj24394/Project_Development/Plan Sheets/Package 2 (KN 24149)/Drainage/24149_DrpI_D201D

T.3N., R.35E., B.M.

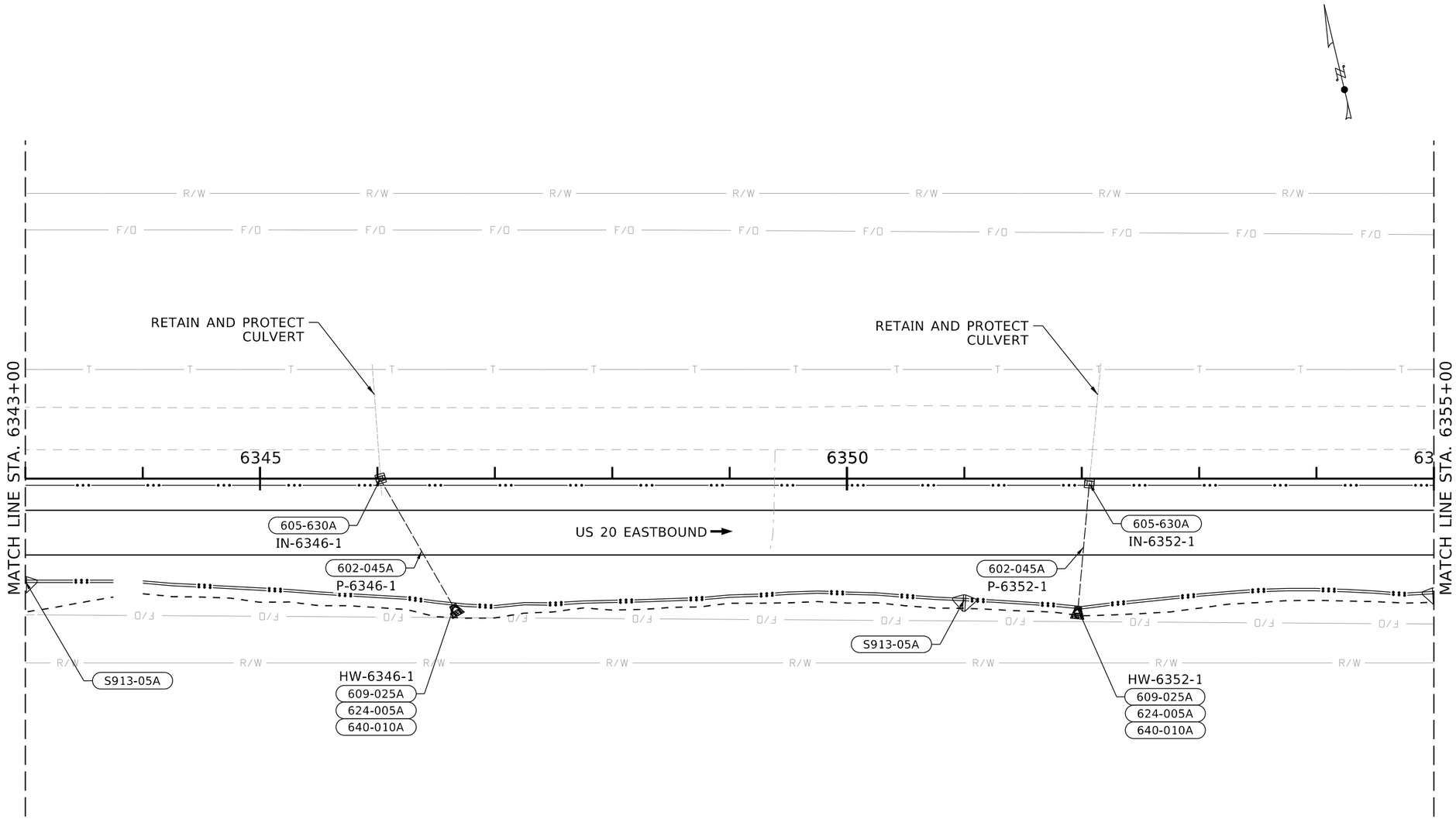

602-045A	**24" PIPE CULVERT**
125 FT	STA. 6346+02.64, 0.00' TO STA. 6346+65.00, 109.52' RT
107 FT	STA. 6351+96.80, 111.37' RT TO STA. 6352+06.46, 3.95' RT
605-630A	**INLET TYPE 8**
1 EACH	STA. 6346+02.64, 0.00'
1 EACH	STA. 6352+06.46, 3.95' RT
609-025A	**MINOR STRUCTURES (24" CONCRETE HEADWALL)**
1 EACH	STA. 6346+65.00, 109.52' RT
1 EACH	STA. 6351+96.80, 111.37' RT
624-005A	**LOOSE RIPRAP (CLASS I)**
4.7 CY	STA. 6346+65.00, 109.52' RT
4.7 CY	STA. 6351+96.80, 111.37' RT
640-010A	**RIPRAP/EROSION CONTROL GEOTEXTILE**
14 SY	STA. 6346+65.00, 109.52' RT
14 SY	STA. 6351+96.80, 111.37' RT
S913-05A	**SP DITCH BERM**
4.9 CY	STA. 6343+00, 87.43' RT
4.9 CY	STA. 6351+00, 102.99' RT

NOTES:

1. SEE SP DITCH BERM DETAIL FOR DITCH BERM DIMENSIONS.

2. IN PHASE 1, RETAIN AND PROTECT EXISTING CULVERTS. CONSTRUCT INLET OR JUNCTION BOX OVER EXISTING CULVERT, AND CONSTRUCT PROPOSED CULVERT UNDER PHASE 1 ROADWAY.

3. SEE PIPE COVER AND DAYLIGHT DETAILS FOR GRADING INFORMATION.

Scale (Feet)
50 0 50 100

REVISIONS			
NO.	DATE	BY	DESCRIPTION

DESIGNED D. ABEDI	SCALES SHOWN ARE FOR 11" X 17" PRINTS ONLY
DESIGN CHECKED C. MCALISTER	
DETAILED P. CONSALVO	CADD FILE NAME 24149_DrpI_D201D.DGN
DRAWING CHECKED C. MCALISTER	DRAWING DATE: November 21, 2025

IDAHO TRANSPORTATION DEPARTMENT
YOUR Safety→YOUR Mobility→YOUR Economic Opportunity
DAVID EVANS AND ASSOCIATES INC.

PROJECT NO.	DRAINAGE PLAN	ENGLISH
A024(149)	US 20, BONNEVILLE COUNTY LINE TO MP 291 STA. 6343+00 TO STA. 6355+00 PHASE 1	COUNTY BINGHAM/BONNEVILLE KEY NUMBER 24149 SHEET 232 OF 441

NOT APPROVED FOR INTERMEDIATE CONSTRUCTION

November 21, 2025 4:48:43 PM
pw://itd-pw.bentley.com:itd-pw-01/Documents/District 6/Projects/prj24394/Project_Development/Plan Sheets/Package 2 (KN 24149)/Drainage/24149_DrpI_D201D

T.3N., R.35E., B.M.

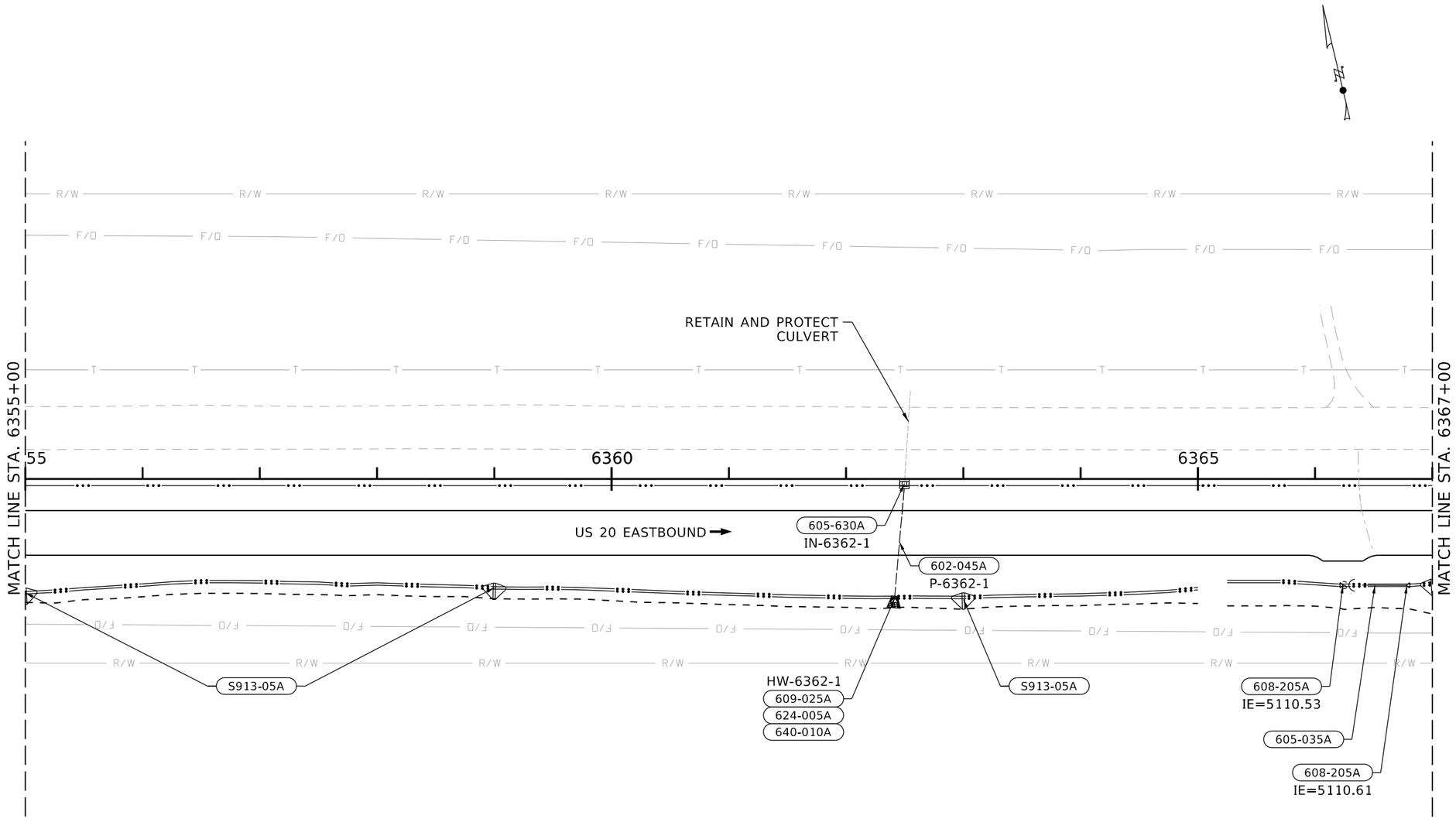

602-045A **24" PIPE CULVERT**
97 FT STA. 6362+41.14, 103.59' RT TO STA. 6362+49.75, 4.20' RT

605-035A **18" STORM SEWER PIPE**
55 FT STA. 6366+23.75, 90.57' RT TO STA. 6366+78.28, 90.69' RT

605-630A **INLET TYPE 8**
1 EACH STA. 6362+49.75, 4.20' RT

608-205A **METAL SAFETY APRON (PARALLEL) (18")**
1 EACH STA. 6366+23.75, 90.57' RT
1 EACH STA. 6366+78.28, 90.69' RT

609-025A **MINOR STRUCTURES (24" CONCRETE HEADWALL)**
1 EACH STA. 6362+41.14, 103.59' RT

624-005A **LOOSE RIPRAP (CLASS I)**
4.7 CY STA. 6362+41.14, 103.59' RT

640-010A **RIPRAP/EROSION CONTROL GEOTEXTILE**
14 SY STA. 6362+41.14, 103.59' RT

S913-05A **SP DITCH BERM**
4.9 CY STA. 6355+00, 97.04' RT
4.9 CY STA. 6359+00, 92.81' RT
4.9 CY STA. 6363+00, 101.06' RT

NOTES:

1. SEE SP DITCH BERM DETAIL FOR DITCH BERM DIMENSIONS.

2. IN PHASE 1, RETAIN AND PROTECT EXISTING CULVERTS. CONSTRUCT INLET OR JUNCTION BOX OVER EXISTING CULVERT, AND CONSTRUCT PROPOSED CULVERT UNDER PHASE 1 ROADWAY.

3. SEE PIPE COVER AND DAYLIGHT DETAILS FOR GRADING INFORMATION.

Scale (Feet)
50 0 50 100

NOT APPROVED FOR INTERMEDIATE CONSTRUCTION

REVISIONS			
NO.	DATE	BY	DESCRIPTION

DESIGNED D. ABEDI
DESIGN CHECKED C. MCALISTER
DETAILED P. CONSALVO
DRAWING CHECKED C. MCALISTER

SCALES SHOWN ARE FOR 11" X 17" PRINTS ONLY
CADD FILE NAME 24149_DrpI_D201D.DGN
DRAWING DATE: November 21, 2025

IDAHO TRANSPORTATION DEPARTMENT
YOUR Safety→YOUR Mobility→YOUR Economic Opportunity
DAVID EVANS AND ASSOCIATES INC.

PROJECT NO. A024(149)

DRAINAGE PLAN
US 20, BONNEVILLE COUNTY
LINE TO MP 291
STA. 6355+00 TO STA. 6367+00
PHASE 1

ENGLISH
COUNTY BINGHAM/BONNEVILLE
KEY NUMBER 24149
SHEET 233 OF 441

November 21, 2025 4:48:46 PM
pw://itd-pw.bentley.com:itd-pw-01/Documents/District 6/Projects/prj24394/Project_Development/Plan Sheets/Package 2 (KN 24149)/Drainage/24149_DrpI_D201D

T.3N., R.35E., B.M.

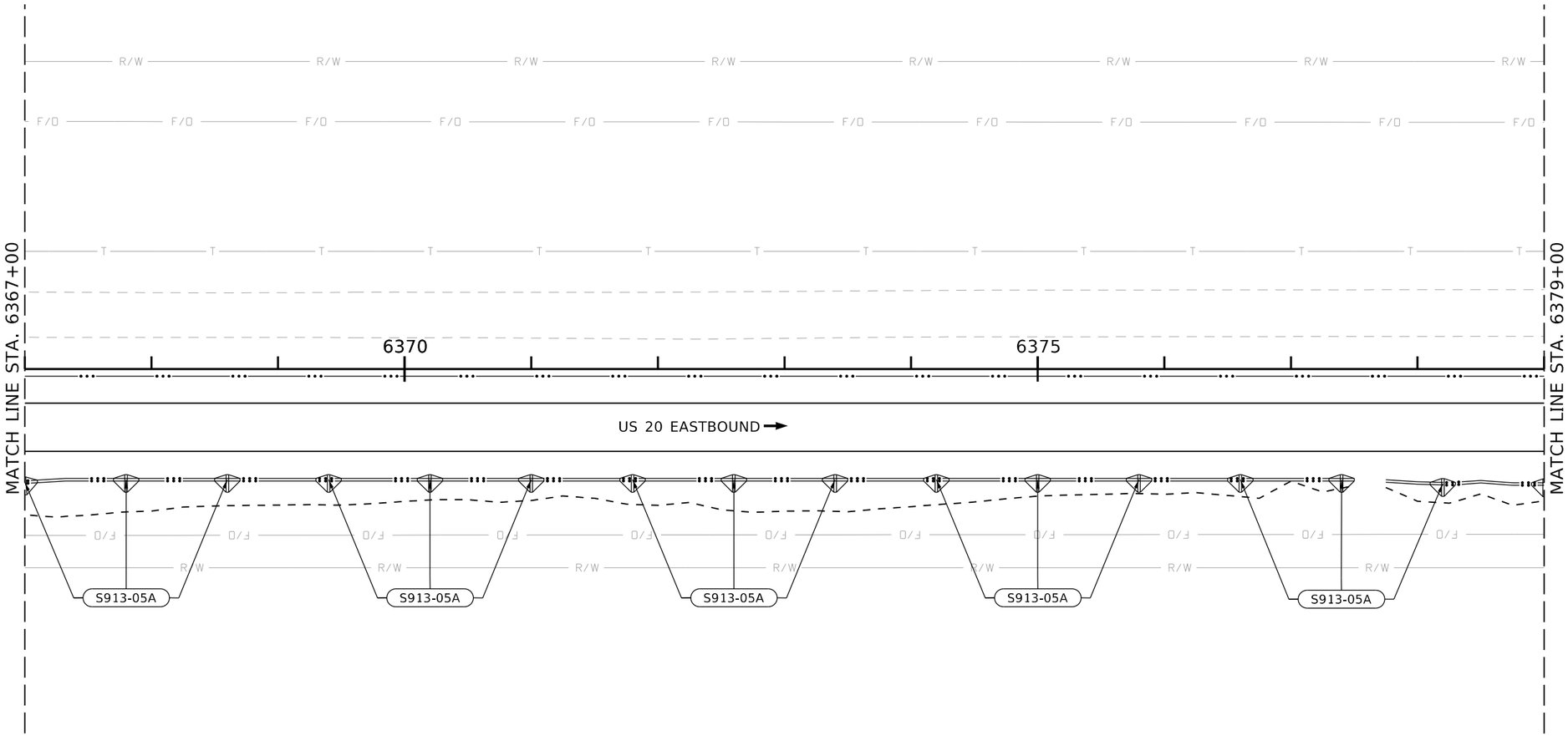

S913-05A	SP DITCH BERM
4.9 CY	STA. 6367+00, 89.41' RT
4.9 CY	STA. 6367+80, 87.43' RT
4.9 CY	STA. 6368+60, 87.43' RT
4.9 CY	STA. 6369+40, 87.43' RT
4.9 CY	STA. 6370+20, 87.43' RT
4.9 CY	STA. 6371+00, 87.43' RT
4.9 CY	STA. 6371+80, 87.43' RT
4.9 CY	STA. 6372+60, 87.43' RT
4.9 CY	STA. 6373+40, 87.43' RT
4.9 CY	STA. 6374+20, 87.43' RT
4.9 CY	STA. 6375+00, 87.43' RT
4.9 CY	STA. 6375+80, 87.43' RT
4.9 CY	STA. 6376+60, 87.43' RT
4.9 CY	STA. 6377+40, 87.43' RT
4.9 CY	STA. 6378+20, 90.57' RT

NOTES:

1. SEE SP DITCH BERM DETAIL FOR DITCH BERM DIMENSIONS.

Scale (Feet)
50 0 50 100

REVISIONS			
NO.	DATE	BY	DESCRIPTION

DESIGNED	D. ABEDI
DESIGN CHECKED	C. MCALISTER
DETAILED	P. CONSALVO
DRAWING CHECKED	C. MCALISTER

SCALES SHOWN ARE FOR 11" X 17" PRINTS ONLY

CADD FILE NAME 24149_DrpI_D201D.DGN

DRAWING DATE: November 21, 2025

IDAHO TRANSPORTATION DEPARTMENT
YOUR Safety→YOUR Mobility→YOUR Economic Opportunity

DAVID EVANS AND ASSOCIATES INC.

PROJECT NO.
A024(149)

DRAINAGE PLAN
US 20, BONNEVILLE COUNTY
LINE TO MP 291
STA. 6367+00 TO STA. 6379+00
PHASE 1

ENGLISH

COUNTY BINGHAM/BONNEVILLE

KEY NUMBER 24149

SHEET 234 OF 441

NOT APPROVED
INTERMEDIATE
FOR CONSTRUCTION

November 21, 2025 4:48:48 PM
pw://itd-pw.bentley.com:itd-pw-01/Documents/District 6/Projects/prj24394/Project_Development/Plan Sheets/Package 2 (KN 24149)/Drainage/24149_DrpI_D201D

T.3N., R.35E., B.M.

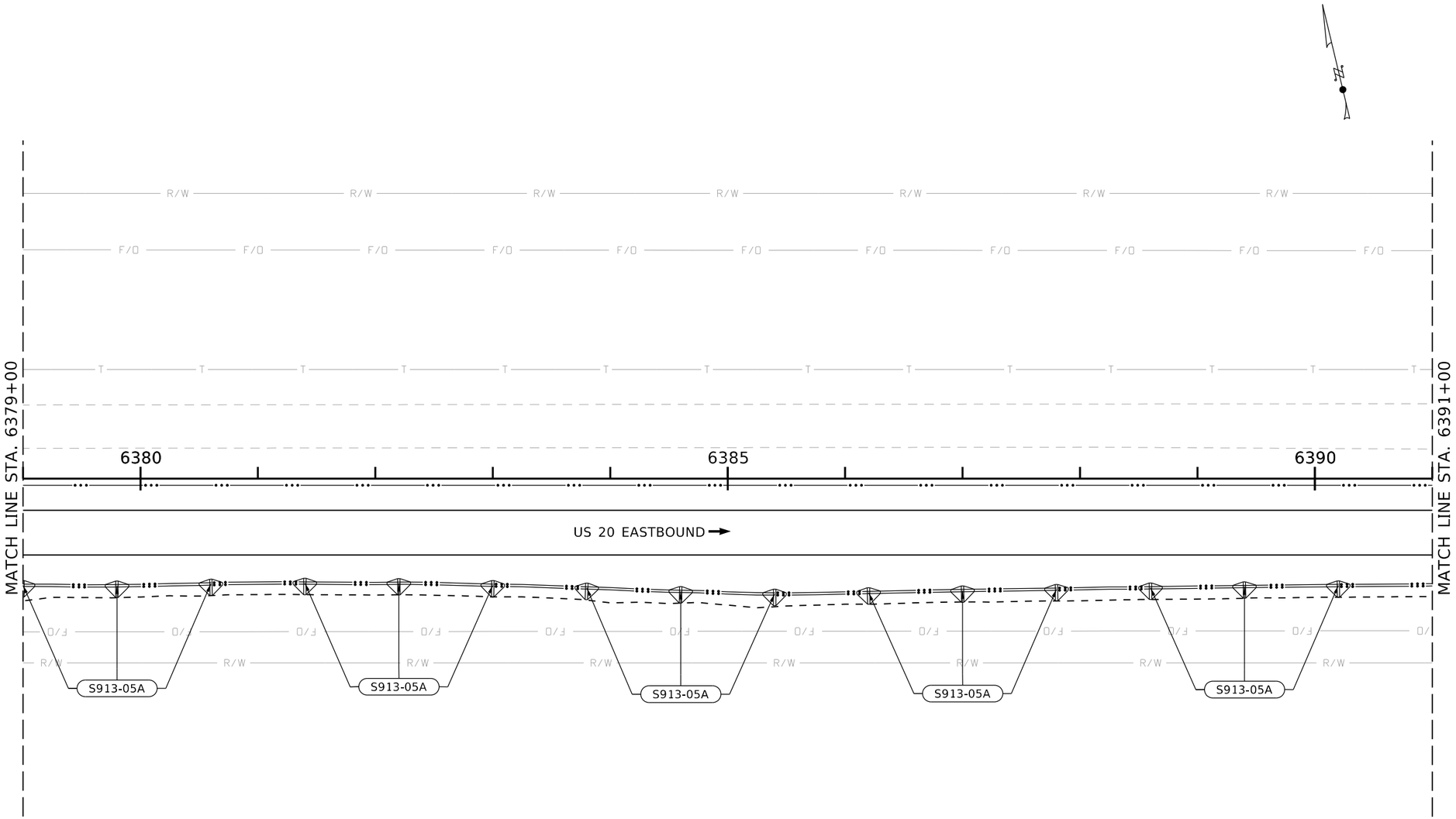

S913-05A	SP DITCH BERM
4.9 CY	STA. 6379+00, 90.79' RT
4.9 CY	STA. 6379+80, 91.25' RT
4.9 CY	STA. 6380+60, 89.65' RT
4.9 CY	STA. 6381+40, 88.91' RT
4.9 CY	STA. 6382+20, 89.10' RT
4.9 CY	STA. 6383+00, 90.81' RT
4.9 CY	STA. 6383+80, 93.08' RT
4.9 CY	STA. 6384+60, 95.98' RT
4.9 CY	STA. 6385+40, 98.18' RT
4.9 CY	STA. 6386+20, 96.96' RT
4.9 CY	STA. 6387+00, 95.37' RT
4.9 CY	STA. 6387+80, 94.13' RT
4.9 CY	STA. 6388+60, 92.95' RT
4.9 CY	STA. 6389+40, 91.88' RT
4.9 CY	STA. 6390+20, 91.05' RT

NOTES:

1. SEE SP DITCH BERM DETAIL FOR DITCH BERM DIMENSIONS.

Scale (Feet)
50 0 50 100

REVISIONS			
NO.	DATE	BY	DESCRIPTION

DESIGNED D. ABEDI
DESIGN CHECKED C. MCALISTER
DETAILED P. CONSALVO
DRAWING CHECKED C. MCALISTER

SCALES SHOWN ARE FOR 11" X 17" PRINTS ONLY
CADD FILE NAME 24149_DrpI_D201D.DGN
DRAWING DATE: November 21, 2025

IDAHO TRANSPORTATION DEPARTMENT
YOUR Safety→YOUR Mobility→YOUR Economic Opportunity
DAVID EVANS AND ASSOCIATES INC.

PROJECT NO.
A024(149)

DRAINAGE PLAN
US 20, BONNEVILLE COUNTY
LINE TO MP 291
STA. 6379+00 TO STA. 6391+00
PHASE 1

ENGLISH
COUNTY BINGHAM/BONNEVILLE
KEY NUMBER 24149
SHEET 235 OF 441

NOT APPROVED
INTERMEDIATE
FOR CONSTRUCTION

November 21, 2025 4:48:51 PM
pw://itd-pw.bentley.com:itd-pw-01/Documents/District 6/Projects/prj24394/Project_Development/Plan Sheets/Package 2 (KN 24149)/Drainage/24149_DrpI_D201D

T.3N., R.35E., B.M.

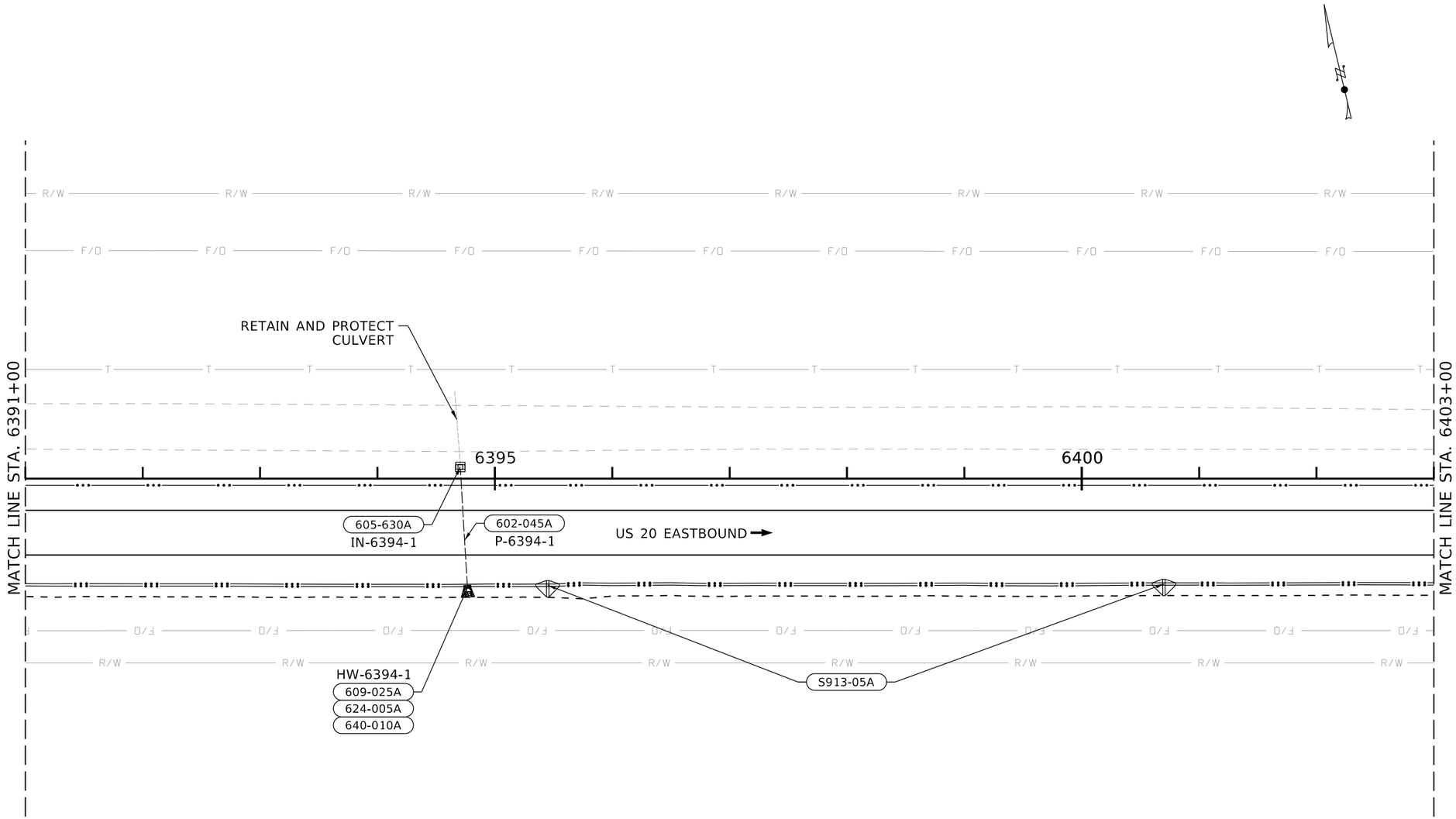

602-045A **24" PIPE CULVERT**
102 FT STA. 6394+70.60, 9.96' LT TO STA. 6394+76.65, 92.86' RT

605-630A **INLET TYPE 8**
1 EACH STA. 6394+70.60, 9.96' LT

609-025A **MINOR STRUCTURES (24" CONCRETE HEADWALL)**
1 EACH STA. 6394+76.65, 92.86' RT

624-005A **LOOSE RIPRAP (CLASS I)**
4.7 CY STA. 6394+76.65, 92.86' RT

640-010A **RIPRAP/EROSION CONTROL GEOTEXTILE**
14 SY STA. 6394+76.65, 92.86' RT

S913-05A **SP DITCH BERM**
4.9 CY STA. 6395+45, 90.78' RT
4.9 CY STA. 6400+70, 89.73' RT

NOTES:

1. SEE SP DITCH BERM DETAIL FOR DITCH BERM DIMENSIONS.

2. IN PHASE 1, RETAIN AND PROTECT EXISTING CULVERTS. CONSTRUCT INLET OR JUNCTION BOX OVER EXISTING CULVERT, AND CONSTRUCT PROPOSED CULVERT UNDER PHASE 1 ROADWAY.

3. SEE PIPE COVER AND DAYLIGHT DETAILS FOR GRADING INFORMATION.

Scale (Feet)
50 0 50 100

NOT APPROVED FOR CONSTRUCTION
INTERMEDIATE

REVISIONS			
NO.	DATE	BY	DESCRIPTION

DESIGNED D. ABEDI
DESIGN CHECKED C. MCALISTER
DETAILED P. CONSALVO
DRAWING CHECKED C. MCALISTER

SCALES SHOWN ARE FOR 11" X 17" PRINTS ONLY
CADD FILE NAME 24149_DrpI_D201D.DGN
DRAWING DATE: November 21, 2025

IDAHO TRANSPORTATION DEPARTMENT
YOUR Safety→YOUR Mobility→YOUR Economic Opportunity
DAVID EVANS AND ASSOCIATES INC.

PROJECT NO.
A024(149)

DRAINAGE PLAN
US 20, BONNEVILLE COUNTY
LINE TO MP 291
STA. 6391+00 TO STA. 6403+00
PHASE 1

ENGLISH
COUNTY BINGHAM/BONNEVILLE
KEY NUMBER 24149
SHEET 236 OF 441

November 21, 2025 4:48:54 PM
pw://itd-pw.bentley.com:itd-pw-01/Documents/District 6/Projects/prj24394/Project_Development/Plan Sheets/Package 2 (KN 24149)/Drainage/24149_DrpI_D201D

T.3N., R.35E., B.M.

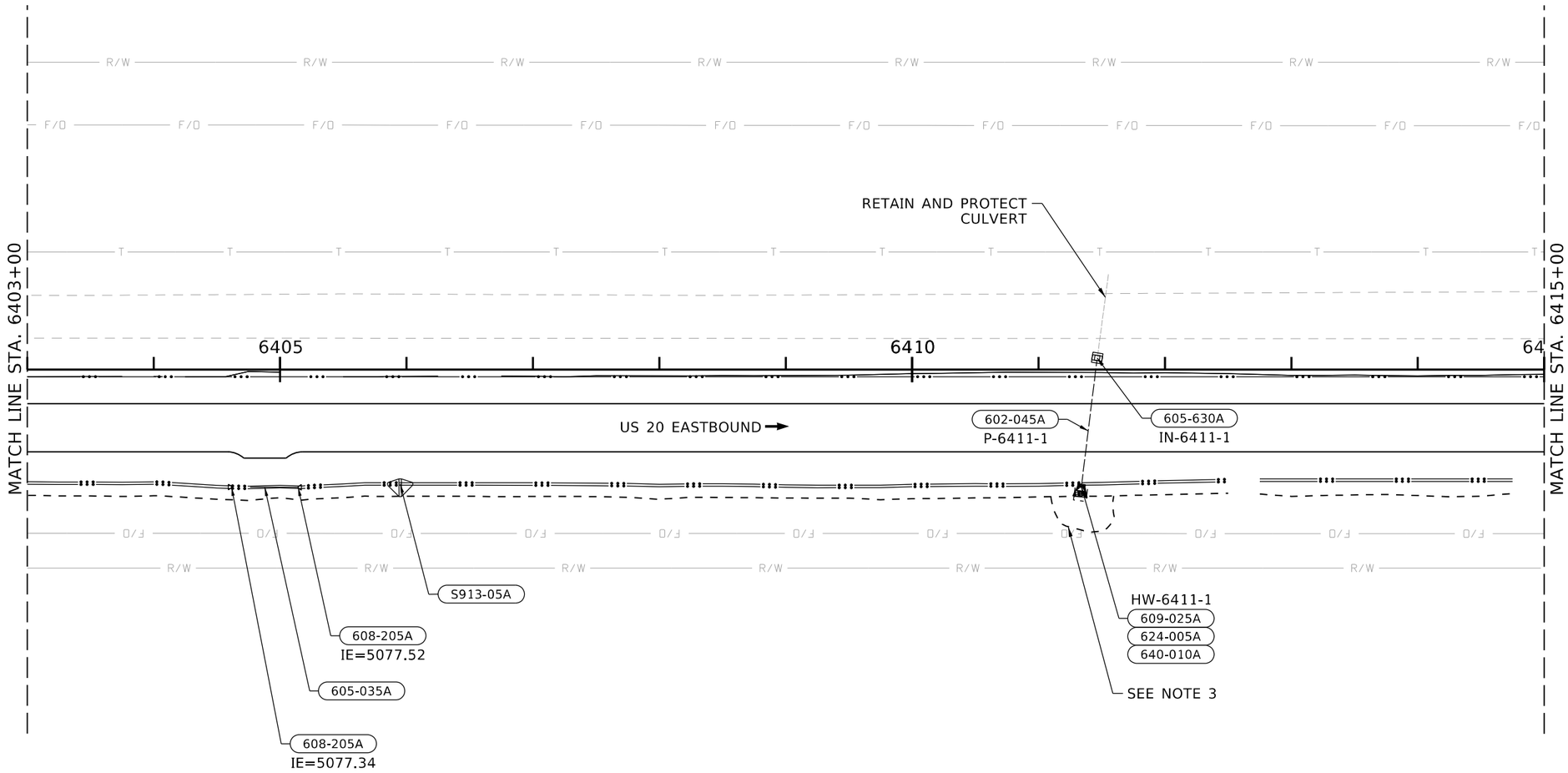

602-045A **24" PIPE CULVERT**
102 FT STA. 6411+33.86, 92.62' RT TO STA. 6411+46.36, 9.20' LT

605-035A **18" STORM SEWER PIPE**
53 FT STA. 6404+61.54, 92.87' RT TO STA. 6405+14.28, 93.09' RT

605-630A **INLET TYPE 8**
1 EACH STA. 6411+46.36, 9.20' LT

608-205A **METAL SAFETY APRON (PARALLEL) (18")**
1 EACH STA. 6404+61.54, 92.87' RT
1 EACH STA. 6405+14.28, 93.09' RT

609-025A **MINOR STRUCTURES (24" CONCRETE HEADWALL)**
1 EACH STA. 6411+33.86, 92.62' RT

624-005A **LOOSE RIPRAP (CLASS I)**
4.7 CY STA. 6411+33.86, 92.62' RT

640-010A **RIPRAP/EROSION CONTROL GEOTEXTILE**
14 SY STA. 6411+33.86, 92.62' RT

S913-05A **SP DITCH BERM**
4.9 CY STA. 6405+95, 90.38' RT

NOTES:

1. SEE SP DITCH BERM DETAIL FOR DITCH BERM DIMENSIONS.

2. IN PHASE 1, RETAIN AND PROTECT EXISTING CULVERTS. CONSTRUCT INLET OR JUNCTION BOX OVER EXISTING CULVERT, AND CONSTRUCT PROPOSED CULVERT UNDER PHASE 1 ROADWAY.

3. SEE PIPE COVER AND DAYLIGHT DETAILS FOR GRADING INFORMATION.

Scale (Feet)
50 0 50 100

REVISIONS			
NO.	DATE	BY	DESCRIPTION

DESIGNED D. ABEDI
DESIGN CHECKED C. MCALISTER
DETAILED P. CONSALVO
DRAWING CHECKED C. MCALISTER

SCALES SHOWN ARE FOR 11" X 17" PRINTS ONLY
CADD FILE NAME 24149_DrpI_D201D.DGN
DRAWING DATE: November 21, 2025

IDAHO TRANSPORTATION DEPARTMENT
YOUR Safety→YOUR Mobility→YOUR Economic Opportunity
DAVID EVANS AND ASSOCIATES INC.

PROJECT NO. A024(149)

DRAINAGE PLAN
US 20, BONNEVILLE COUNTY
LINE TO MP 291
STA. 6403+00 TO STA. 6415+00
PHASE 1

ENGLISH
COUNTY BINGHAM/BONNEVILLE
KEY NUMBER 24149
SHEET 237 OF 441

NOT APPROVED FOR INTERMEDIATE CONSTRUCTION

November 21, 2025 4:48:57 PM
pw://itd-pw.bentley.com:itd-pw-01/Documents/District 6/Projects/prj24394/Project_Development/Plan Sheets/Package 2 (KN 24149)/Drainage/24149_DrpI_D201D

T.3N., R.35E., B.M.

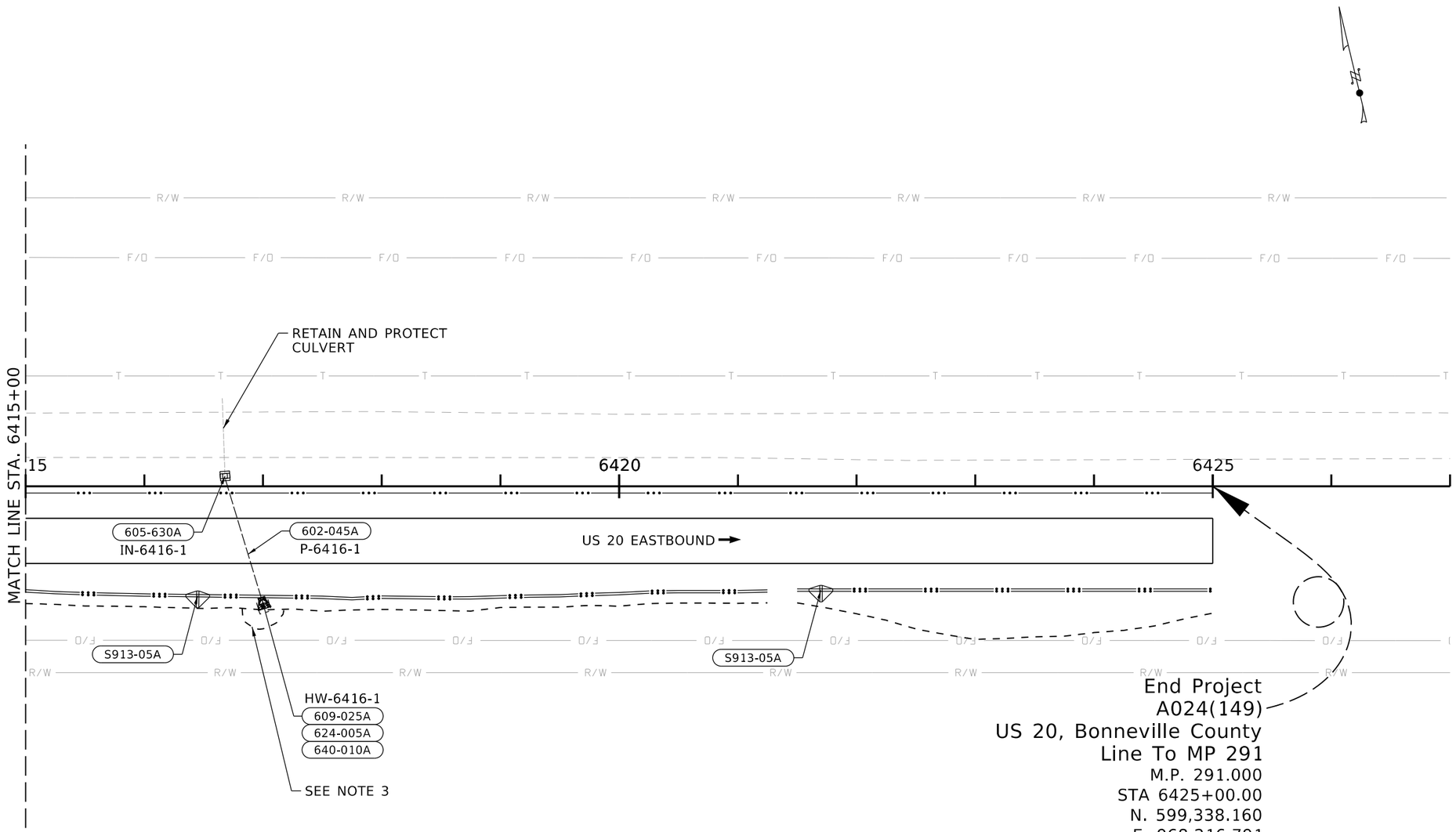

602-045A 108 FT	**24" PIPE CULVERT** STA. 6416+67.89, 10.10' LT TO STA. 6417+99.14, 95.45' RT
605-630A 1 EACH	**INLET TYPE 8** STA. 6416+67.89, 10.10' LT
609-025A 1 EACH	**MINOR STRUCTURES (24" CONCRETE HEADWALL)** STA. 6416+99.14, 95.45' RT
624-005A 4.7 CY	**LOOSE RIPRAP (CLASS I)** STA. 6416+99.14, 95.45' RT
640-010A 14 SY	**RIPRAP/EROSION CONTROL GEOTEXTILE** STA. 6416+99.14, 95.45' RT
S913-05A 4.9 CY 4.9 CY	**SP DITCH BERM** STA. 6416+45, 92.23' RT STA. 6421+70, 87.43' RT

NOTES:

1. SEE SP DITCH BERM DETAIL FOR DITCH BERM DIMENSIONS.

2. IN PHASE 1, RETAIN AND PROTECT EXISTING CULVERTS. CONSTRUCT INLET OR JUNCTION BOX OVER EXISTING CULVERT, AND CONSTRUCT PROPOSED CULVERT UNDER PHASE 1 ROADWAY.

3. SEE PIPE COVER AND DAYLIGHT DETAILS FOR GRADING INFORMATION.

Scale (Feet)
50 0 50 100

REVISIONS			
NO.	DATE	BY	DESCRIPTION

DESIGNED D. ABEDI	SCALES SHOWN ARE FOR 11" X 17" PRINTS ONLY	IDAHO TRANSPORTATION DEPARTMENT YOUR Safety→YOUR Mobility→YOUR Economic Opportunity	PROJECT NO.
DESIGN CHECKED C. MCALISTER			A024(149)
DETAILED P. CONSALVO	CADD FILE NAME 24149_DrpI_D201D.DGN		
DRAWING CHECKED C. MCALISTER	DRAWING DATE: November 21, 2025	DAVID EVANS AND ASSOCIATES INC.	

DRAINAGE PLAN	ENGLISH
US 20, BONNEVILLE COUNTY LINE TO MP 291 STA. 6415+00 TO STA. 6427+00 PHASE 1	COUNTY BINGHAM/BONNEVILLE KEY NUMBER 24149 SHEET 238 OF 441

NOT APPROVED
INTERMEDIATE FOR CONSTRUCTION

November 25, 2025 9:50:19 AM
pw://itd-pw.bentley.com:itd-pw-01/Documents/District 6/Projects/prj24394/Project_Development/Plan Sheets/Package 2 (KN 24149)/Drainage/24149_DrpI_D201D

T.3N., R.33E., B.M.

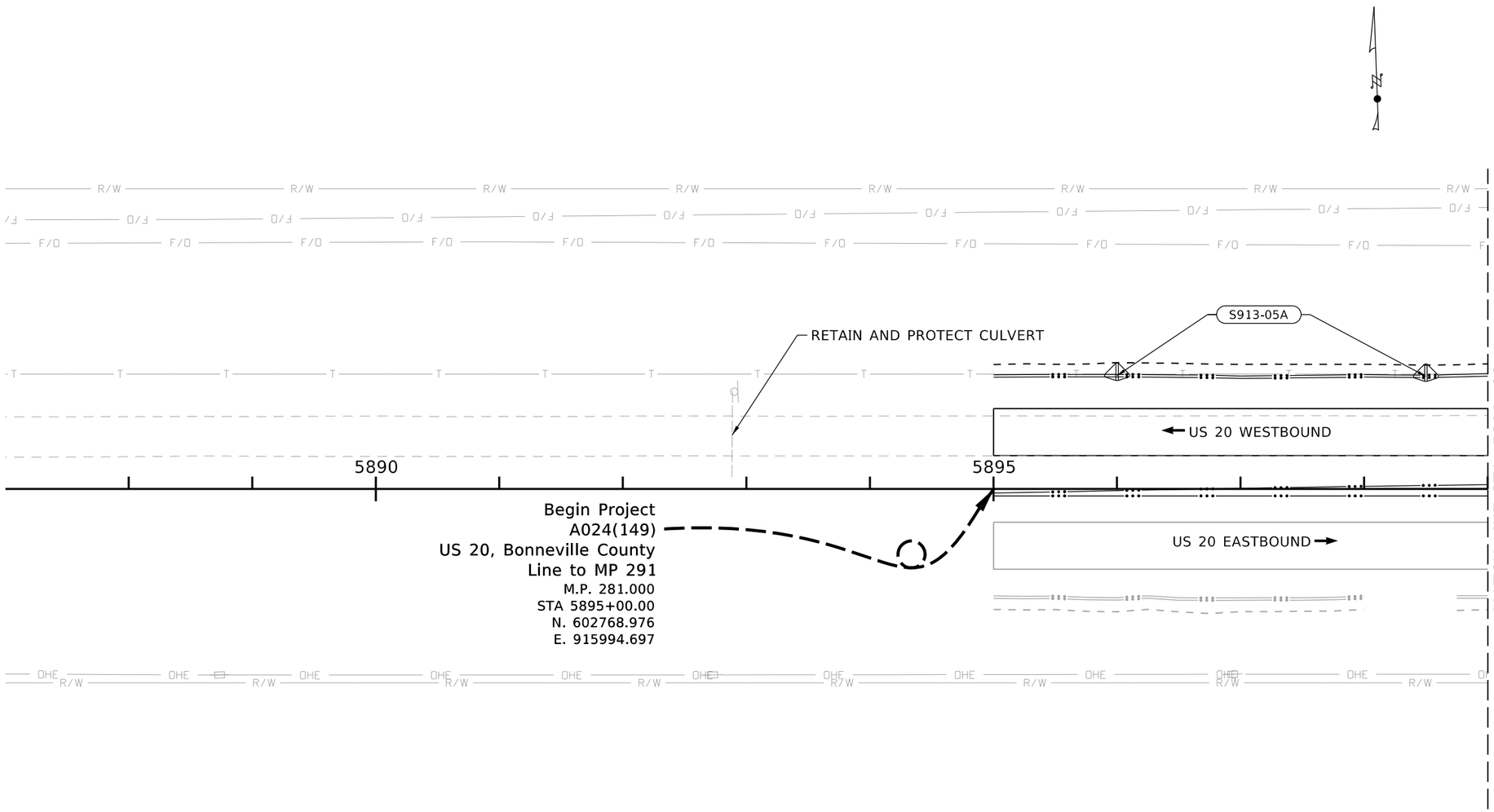

S913-05A **SP DITCH BERM**
4.9 CY STA. 5896+00, 91.79' LT
4.9 CY STA. 5898+50, 91.10' LT

NOTES:

1. SEE SP DITCH BERM DETAIL FOR DITCH BERM DIMENSIONS.

Scale (Feet)
50 0 50 100

REVISIONS			
NO.	DATE	BY	DESCRIPTION

DESIGNED D. ABEDI
DESIGN CHECKED C. MCALISTER
DETAILED P. CONSALVO
DRAWING CHECKED C. MCALISTER

SCALES SHOWN ARE FOR 11" X 17" PRINTS ONLY
CADD FILE NAME 24149_DrpI_D202A.DGN
DRAWING DATE: November 21, 2025

IDAHO TRANSPORTATION DEPARTMENT
YOUR Safety→YOUR Mobility→YOUR Economic Opportunity
DAVID EVANS AND ASSOCIATES INC.

PROJECT NO. A024(149)

DRAINAGE PLAN
US 20, BONNEVILLE COUNTY
LINE TO MP 291
STA. 5887+00 TO STA. 5899+00
PHASE 2

ENGLISH
COUNTY BINGHAM/BONNEVILLE
KEY NUMBER 24149
SHEET 239 OF 441

NOT APPROVED
INTERMEDIATE
FOR CONSTRUCTION

November 25, 2025 9:51:15 AM
pw://itd-pw.bentley.com:itd-pw-01/Documents/District 6/Projects/prj24394/Project_Development/Plan Sheets/Package 2 (KN 24149)/Drainage/24149_DrpI_D202A

T.3N., R.33E., B.M.

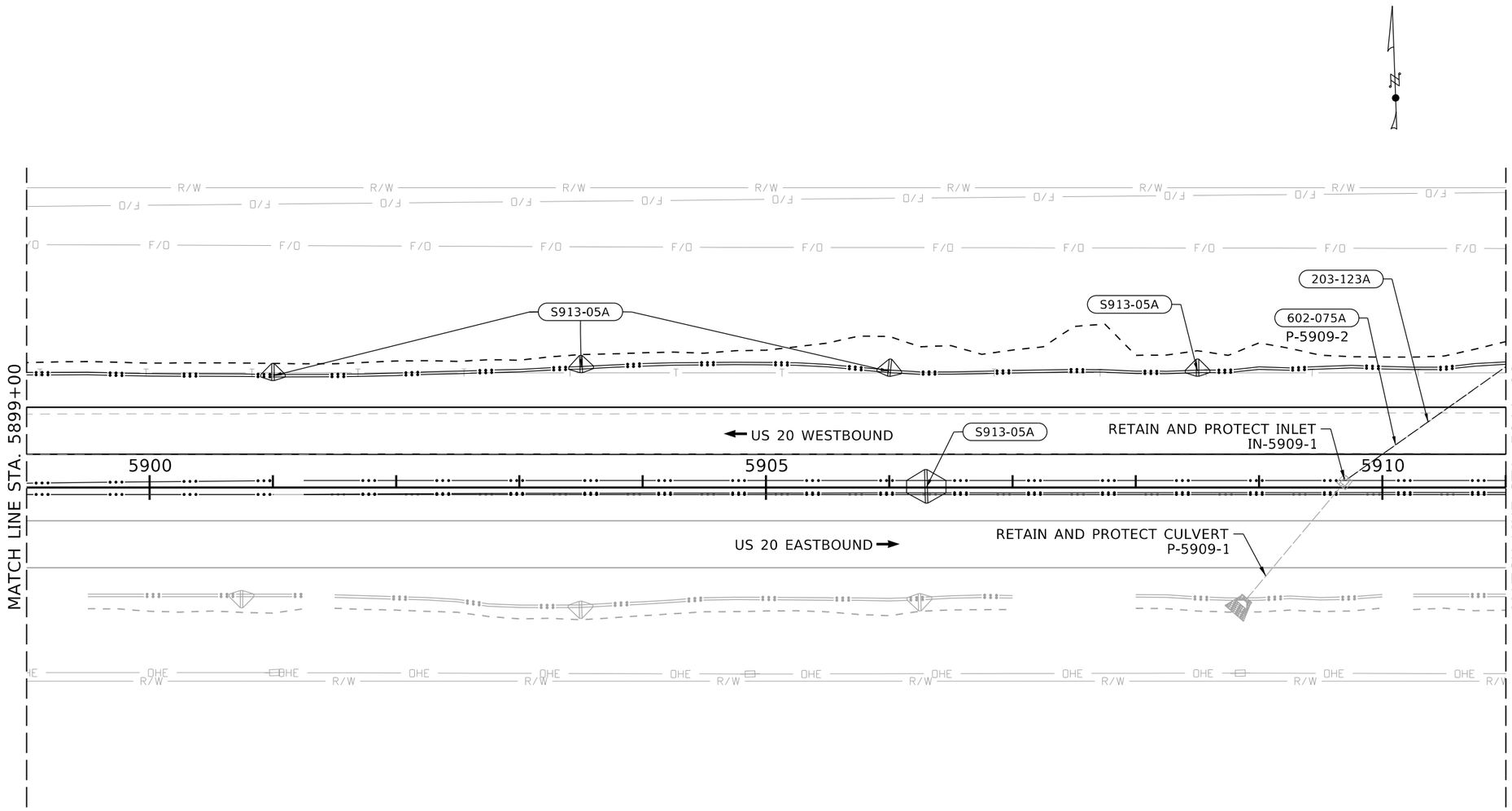

203-123A	**REMOVAL OF MISCELLANEOUS ITEMS (PIPE)**
128 FT	STA. 5909+69.58, 5.41' LT TO STA. 5911+00.00, 78.63' LT
602-075A	**42" PIPE CULVERT**
159 FT	STA. 5909+69.36, 6.29' LT TO STA. 5911+00.00, 97.95' LT
S913-05A	**SP DITCH BERM**
4.9 CY	STA. 5901+00, 90.64' LT
4.9 CY	STA. 5903+50, 97.11' LT
4.9 CY	STA. 5906+00, 94.18' LT
15.4 CY	STA. 5906+30, 0.01' LT
4.9 CY	STA. 5908+50, 94.14' LT

NOTES:

1. SEE SP DITCH BERM DETAIL FOR DITCH BERM DIMENSIONS.
2. IN PHASE 2, REMOVE EXISTING CULVERT, MODIFY INLET OR JUNCTION BOX OPENING TO CONNECT PROPOSED CULVERT AND CONSTRUCT UNDER PHASE 2 ROADWAY.
3. SEE PIPE COVER AND DAYLIGHT DETAILS FOR GRADING INFORMATION.

Scale (Feet)
50 0 50 100

REVISIONS			
NO.	DATE	BY	DESCRIPTION

DESIGNED D. ABEDI
DESIGN CHECKED C. MCALISTER
DETAILED P. CONSALVO
DRAWING CHECKED C. MCALISTER

SCALES SHOWN ARE FOR 11" X 17" PRINTS ONLY
CADD FILE NAME 24149_Drpl_D202A.DGN
DRAWING DATE: November 21, 2025

IDAHO TRANSPORTATION DEPARTMENT
YOUR Safety→YOUR Mobility→YOUR Economic Opportunity
DAVID EVANS AND ASSOCIATES INC.

PROJECT NO. A024(149)

DRAINAGE PLAN
US 20, BONNEVILLE COUNTY LINE TO MP 291
STA. 5899+00 TO STA. 5911+00
PHASE 2

ENGLISH
COUNTY BINGHAM/BONNEVILLE
KEY NUMBER 24149
SHEET 240 OF 441

NOT APPROVED
INTERMEDIATE
FOR CONSTRUCTION

November 21, 2025 4:49:26 PM
pw://itd-pw.bentley.com:itd-pw-01/Documents/District 6/Projects/prj24394/Project_Development/Plan Sheets/Package 2 (KN 24149)/Drainage/24149_Drpl_D202A

T.3N., R.33E., B.M.

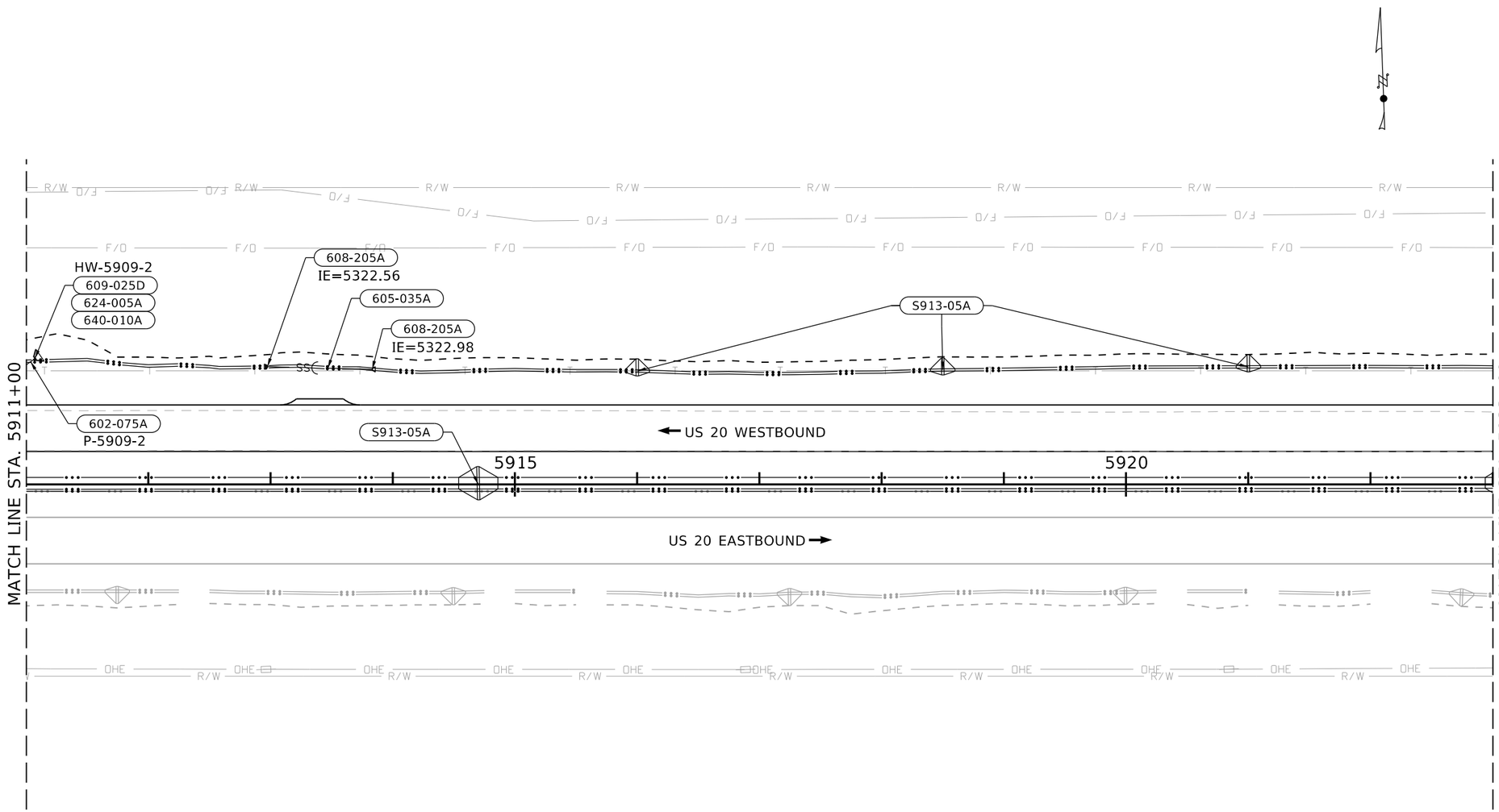

602-075A **42" PIPE CULVERT**
9 FT STA. 5911+00.00, 97.95' LT TO STA. 5911+07.21, 102.93' LT

605-035A **18" STORM SEWER PIPE**
86 FT STA. 5912+97.33, 97.20' LT TO STA. 5913+83.22, 94.20' LT

608-205A **METAL SAFETY APRON (PARALLEL) (18")**
1 EACH STA. 5912+97.33, 97.20' LT
1 EACH STA. 5913+83.22, 94.20' LT

609-025D **MINOR STRUCTURES (42" CONCRETE HEADWALL)**
1 EACH STA. 5911+07.21, 102.93' LT

624-005A **LOOSE RIPRAP (CLASS I)**
14.1 CY STA. 5911+07.21, 102.93' LT

640-010A **RIPRAP/EROSION CONTROL GEOTEXTILE**
32 SY STA. 5911+07.21, 102.93' LT

S913-05A **SP DITCH BERM**
14.9 CY STA. 5914+70, 0.04' LT
4.9 CY STA. 5916+00, 92.85' LT
4.9 CY STA. 5918+50, 93.62' LT
4.9 CY STA. 5921+00, 96.17' LT

NOTES:

1. SEE SP DITCH BERM DETAIL FOR DITCH BERM DIMENSIONS.

2. IN PHASE 2, REMOVE EXISTING CULVERT, MODIFY INLET OR JUNCTION BOX OPENING TO CONNECT PROPOSED CULVERT AND CONSTRUCT UNDER PHASE 2 ROADWAY.

3. SEE PIPE COVER AND DAYLIGHT DETAILS FOR GRADING INFORMATION.

Scale (Feet)
50 0 50 100

NOT APPROVED FOR CONSTRUCTION
INTERMEDIATE

REVISIONS			
NO.	DATE	BY	DESCRIPTION

DESIGNED D. ABEDI
DESIGN CHECKED C. MCALISTER
DETAILED P. CONSALVO
DRAWING CHECKED C. MCALISTER

SCALES SHOWN ARE FOR 11" X 17" PRINTS ONLY
CADD FILE NAME 24149_DrpI_D202A.DGN
DRAWING DATE: November 21, 2025

IDAHO TRANSPORTATION DEPARTMENT
YOUR Safety→YOUR Mobility→YOUR Economic Opportunity
DAVID EVANS AND ASSOCIATES INC.

PROJECT NO. A024(149)

DRAINAGE PLAN
US 20, BONNEVILLE COUNTY
LINE TO MP 291
STA. 5911+00 TO STA. 5923+00
PHASE 2

ENGLISH
COUNTY BINGHAM/BONNEVILLE
KEY NUMBER 24149
SHEET 241 OF 441

November 21, 2025 4:49:29 PM
pw://itd-pw.bentley.com:itd-pw-01/Documents/District 6/Projects/prj24394/Project_Development/Plan Sheets/Package 2 (KN 24149)/Drainage/24149_DrpI_D202A

T.3N., R.33E., B.M.

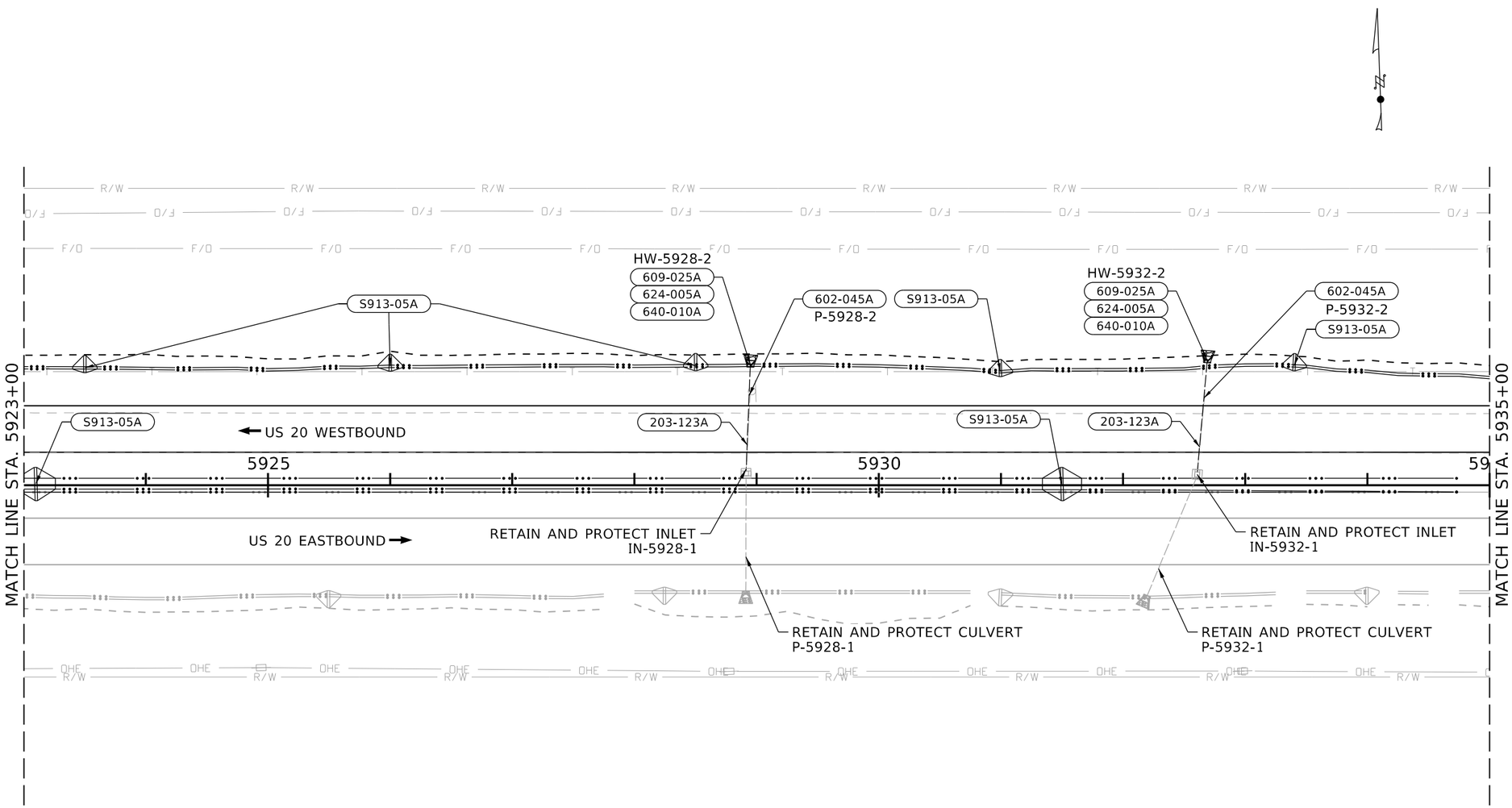

203-123A REMOVAL OF MISCELLANEOUS ITEMS (PIPE)

67 FT	STA. 5928+91.38, 11.15' LT TO STA. 5928+94.79, 77.19' LT
67 FT	STA. 5932+60.75, 10.32' LT TO STA. 5932+67.03, 76.18' LT

602-045A 24" PIPE CULVERT

88 FT	STA. 5928+91.44, 13.04' LT TO STA. 5928+96.85, 116.62' LT
93 FT	STA. 5932+60.74, 11.53' LT TO STA. 5932+68.42, 97.16' LT

609-025A MINOR STRUCTURES (24" CONCRETE HEADWALL)

1 EACH	STA. 5928+97.85, 141.83' LT
1 EACH	STA. 5932+68.92, 102.22' LT

624-005A LOOSE RIPRAP (CLASS I)

4.7 CY	STA. 5928+97.85, 141.83' LT
4.7 CY	STA. 5932+68.92, 102.22' LT

640-010A RIPRAP/EROSION CONTROL GEOTEXTILE

14 SY	STA. 5928+97.85, 141.83' LT
14 SY	STA. 5932+68.92, 102.22' LT

S913-05A SP DITCH BERM

14.4 CY	STA. 5923+10, 1.24' LT
4.9 CY	STA. 5923+50, 96.12' LT
4.9 CY	STA. 5926+00, 97.33' LT
4.9 CY	STA. 5928+50, 97.81' LT
4.9 CY	STA. 5931+00, 92.90' LT
4.9 CY	STA. 5933+40, 97.74' LT
14.8 CY	STA. 5931+50, 0.27' LT

NOTES:

1. SEE SP DITCH BERM DETAIL FOR DITCH BERM DIMENSIONS.
2. IN PHASE 2, REMOVE EXISTING CULVERT, MODIFY INLET OR JUNCTION BOX OPENING TO CONNECT PROPOSED CULVERT AND CONSTRUCT UNDER PHASE 2 ROADWAY.
3. SEE PIPE COVER AND DAYLIGHT DETAILS FOR GRADING INFORMATION.

Scale (Feet)
50 0 50 100

NOT APPROVED FOR INTERMEDIATE CONSTRUCTION

REVISIONS			
NO.	DATE	BY	DESCRIPTION

DESIGNED D. ABEDI	SCALES SHOWN ARE FOR 11" X 17" PRINTS ONLY
DESIGN CHECKED C. MCALISTER	
DETAILED P. CONSALVO	CADD FILE NAME 24149_Drpl_D202A.DGN
DRAWING CHECKED C. MCALISTER	DRAWING DATE: November 21, 2025

IDAHO TRANSPORTATION DEPARTMENT
YOUR Safety→YOUR Mobility→YOUR Economic Opportunity
DAVID EVANS AND ASSOCIATES INC.

PROJECT NO. A024(149)

DRAINAGE PLAN
US 20, BONNEVILLE COUNTY
LINE TO MP 291
STA. 5923+00 TO STA. 5935+00
PHASE 2

ENGLISH
COUNTY BINGHAM/BONNEVILLE
KEY NUMBER 24149
SHEET 242 OF 441

November 21, 2025 4:49:32 PM
pw://itd-pw.bentley.com:itd-pw-01/Documents/District 6/Projects/prj24394/Project_Development/Plan Sheets/Package 2 (KN 24149)/Drainage/24149_Drpl_D202A

T.3N., R.33E., B.M.

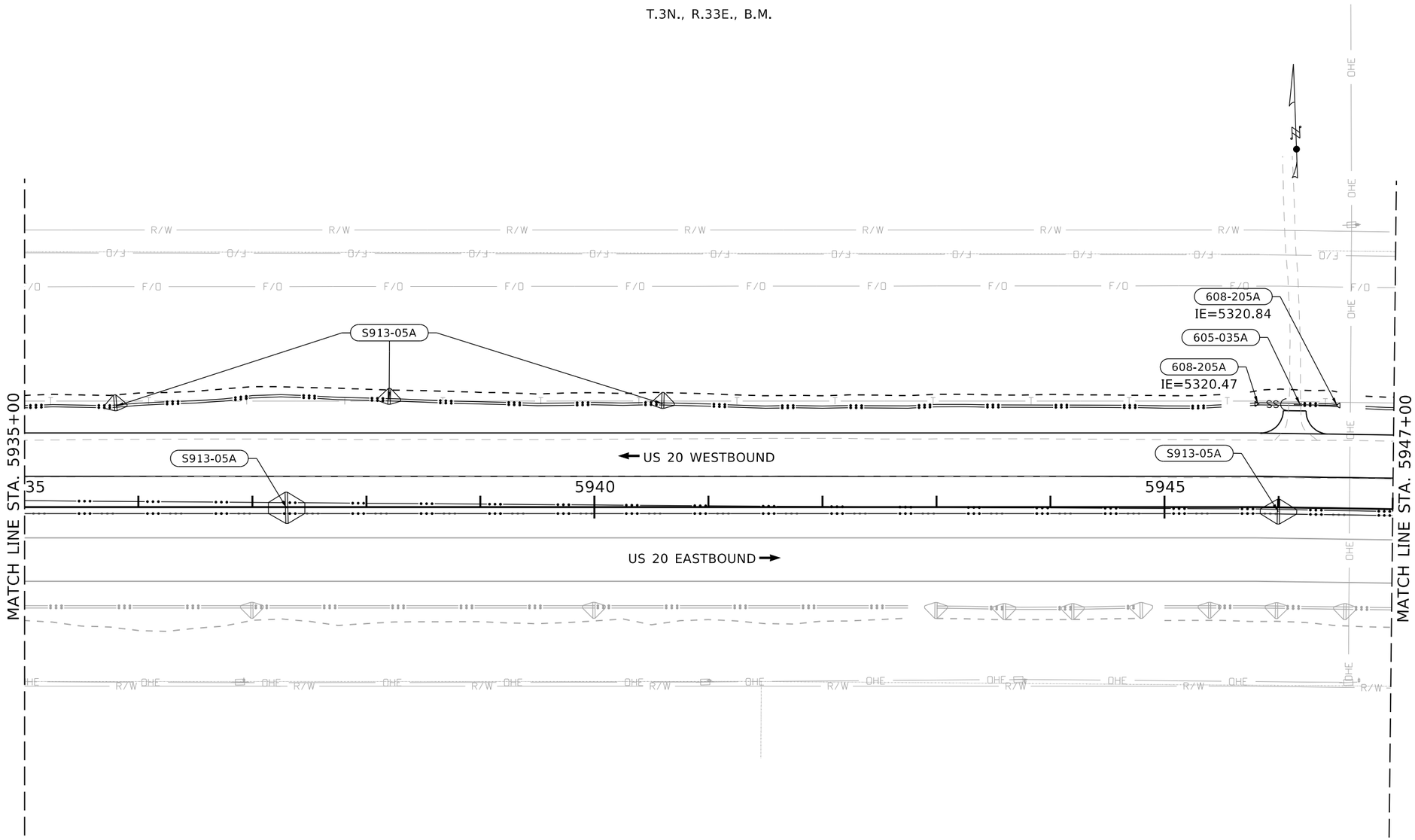

605-035A	**18" STORM SEWER PIPE**
70 FT	STA. 5945+80.91, 89.48' LT TO STA. 5946+50.00, 90.18' LT
608-205A	**METAL SAFETY APRON (PARALLEL) (18")**
1 EACH	STA. 5945+80.91, 89.48' LT
1 EACH	STA. 5946+50.00, 90.18' LT
S913-05A	**SP DITCH BERM**
4.9 CY	STA. 5935+80, 88.53' LT
15.1 CY	STA. 5937+30, 0.86' RT
4.9 CY	STA. 5938+20, 94.16' LT
4.9 CY	STA. 5940+60, 90.53' LT
9.7 CY	STA. 5946+00, 3.69' RT

NOTES:

1. SEE SP DITCH BERM DETAIL FOR DITCH BERM DIMENSIONS.
2. IN PHASE 2, REMOVE EXISTING CULVERT, MODIFY INLET OR JUNCTION BOX OPENING TO CONNECT PROPOSED CULVERT AND CONSTRUCT UNDER PHASE 2 ROADWAY.
3. SEE PIPE COVER AND DAYLIGHT DETAILS FOR GRADING INFORMATION.

Scale (Feet)
50 0 50 100

REVISIONS			
NO.	DATE	BY	DESCRIPTION

DESIGNED D. ABEDI
DESIGN CHECKED C. MCALISTER
DETAILED P. CONSALVO
DRAWING CHECKED C. MCALISTER

SCALES SHOWN ARE FOR 11" X 17" PRINTS ONLY

CADD FILE NAME 24149_Drpl_D202A.DGN

DRAWING DATE: November 21, 2025

IDAHO TRANSPORTATION DEPARTMENT
YOUR Safety→YOUR Mobility→YOUR Economic Opportunity

DAVID EVANS AND ASSOCIATES INC.

PROJECT NO. A024(149)

DRAINAGE PLAN
US 20, BONNEVILLE COUNTY LINE TO MP 291
STA. 5935+00 TO STA. 5947+00
PHASE 2

ENGLISH

COUNTY BINGHAM/BONNEVILLE

KEY NUMBER 24149

SHEET 243 OF 441

NOT APPROVED
INTERMEDIATE
FOR CONSTRUCTION

November 21, 2025 4:49:35 PM
pw://itd-pw.bentley.com:itd-pw-01/Documents/District 6/Projects/prj24394/Project_Development/Plan Sheets/Package 2 (KN 24149)/Drainage/24149_Drpl_D202A

T.3N., R.33E., B.M.

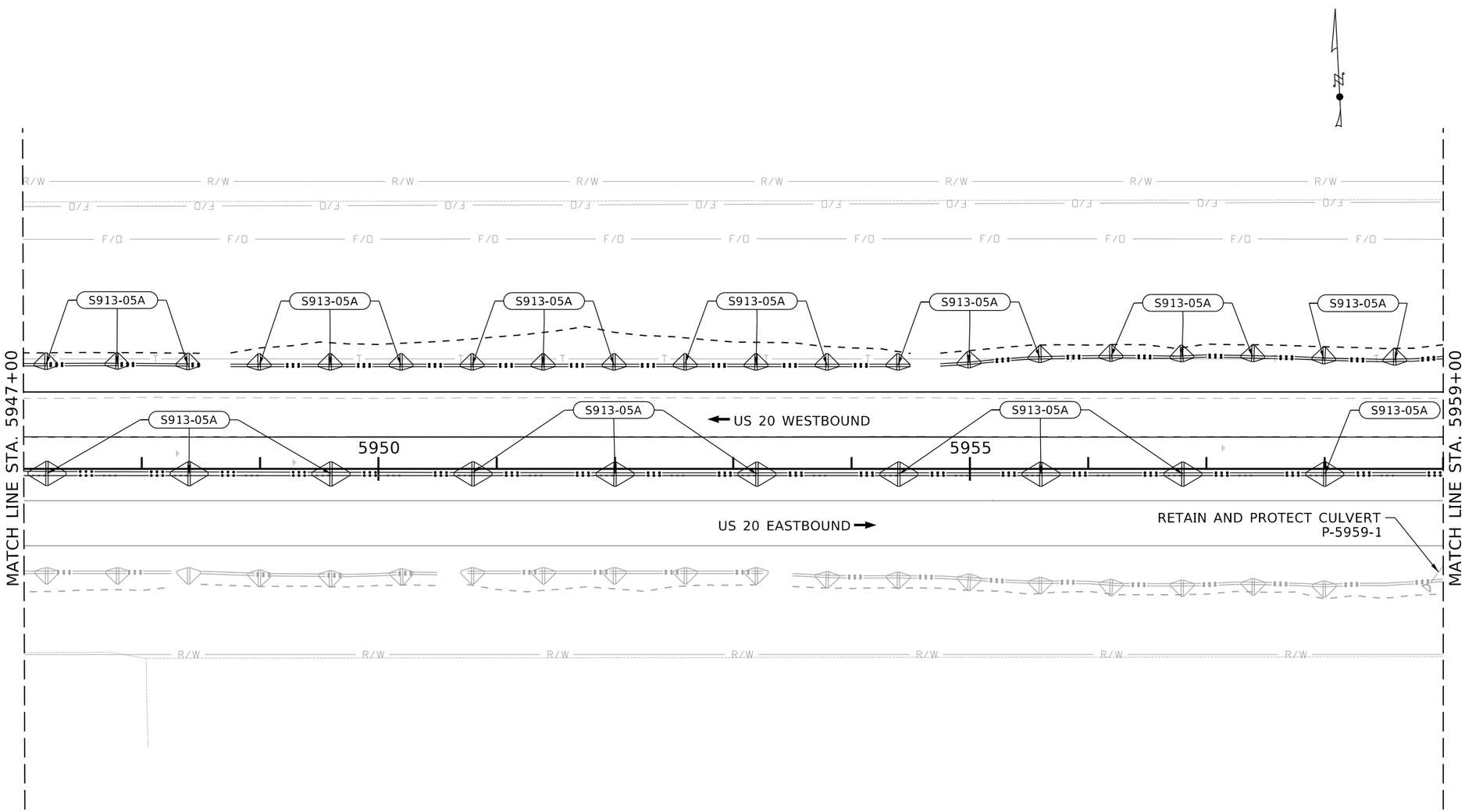

S913-05A	SP DITCH BERM
9.3 CY	STA. 5947+20, 3.93' RT
4.9 CY	STA. 5947+20, 88.08' LT
4.9 CY	STA. 5947+80, 88.26' LT
8.9 CY	STA. 5948+40, 4.12' RT
4.9 CY	STA. 5948+40, 87.80' LT
4.9 CY	STA. 5949+00, 87.45' LT
8.6 CY	STA. 5949+60, 4.28' RT
4.9 CY	STA. 5949+60, 87.45' LT
4.9 CY	STA. 5950+20, 87.45' LT
8.4 CY	STA. 5950+80, 4.21' RT
4.9 CY	STA. 5950+80, 87.45' LT
4.9 CY	STA. 5951+40, 87.45' LT
8.3 CY	STA. 5952+00, 4.46' RT
4.9 CY	STA. 5952+00, 87.45 LT
4.9 CY	STA. 5952+60, 87.45' LT
8.2 CY	STA. 5953+20, 4.50' RT
4.9 CY	STA. 5953+20, 87.45' LT
4.9 CY	STA. 5953+80, 87.45' LT
8.2 CY	STA. 5954+40, 4.48' RT
4.9 CY	STA. 5954+40, 87.45' LT
4.9 CY	STA. 5955+00, 89.31' LT
8.2 CY	STA. 5955+60, 4.49' RT
4.9 CY	STA. 5955+60, 93.86' LT
4.9 CY	STA. 5956+20, 94.86' LT
8.2 CY	STA. 5956+80, 4.49' RT
4.9 CY	STA. 5956+80, 94.48' LT
4.9 CY	STA. 5957+40, 94.64' LT
8.3 CY	STA. 5958+00, 4.45' RT
4.9 CY	STA. 5958+00, 94.57' LT
4.9 CY	STA. 5958+60, 91.70' LT

NOTES:

1. SEE SP DITCH BERM DETAIL FOR DITCH BERM DIMENSIONS.

Scale (Feet)
50 0 50 100

REVISIONS			
NO.	DATE	BY	DESCRIPTION

DESIGNED D. ABEDI
DESIGN CHECKED C. MCALISTER
DETAILED P. CONSALVO
DRAWING CHECKED C. MCALISTER

SCALES SHOWN ARE FOR 11" X 17" PRINTS ONLY
CADD FILE NAME 24149_DrpI_D202A.DGN
DRAWING DATE: November 21, 2025

IDAHO TRANSPORTATION DEPARTMENT
YOUR Safety→YOUR Mobility→YOUR Economic Opportunity
DAVID EVANS AND ASSOCIATES INC.

PROJECT NO.
A024(149)

DRAINAGE PLAN
US 20, BONNEVILLE COUNTY
LINE TO MP 291
STA. 5947+00 TO STA. 5959+00
PHASE 2

ENGLISH
COUNTY BINGHAM/BONNEVILLE
KEY NUMBER 24149
SHEET 244 OF 441

NOT APPROVED
INTERMEDIATE
FOR CONSTRUCTION

November 21, 2025 4:49:39 PM
pw://itd-pw.bentley.com:itd-pw-01/Documents/District 6/Projects/prj24394/Project_Development/Plan Sheets/Package 2 (KN 24149)/Drainage/24149_DrpI_D202A

T.3N., R.33E., B.M.

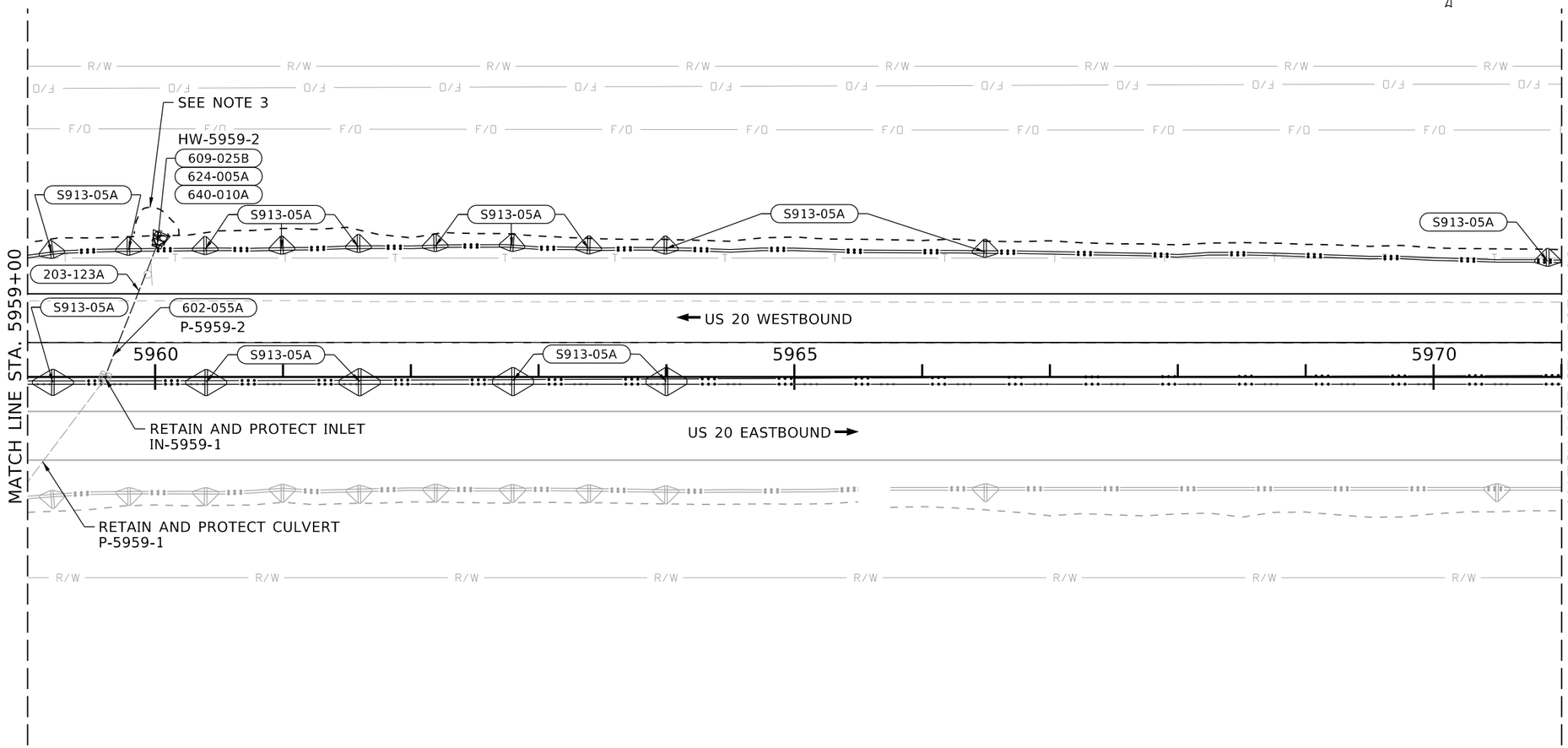

203-123A	**REMOVAL OF MISCELLANEOUS ITEMS (PIPE)**
87 FT	STA. 5959+61.11, 0.94' LT TO STA. 5959+93.03, 81.06' LT
602-055A	**30" PIPE CULVERT**
110 FT	STA. 5959+61.93, 1.40' LT TO STA. 5960+00.68, 95.85' LT
609-025B	**MINOR STRUCTURES (30" CONCRETE HEADWALL)**
1 EACH	STA. 5960+01.65, 103.28' LT
624-005A	**LOOSE RIPRAP (CLASS I)**
7.3 CY	STA. 5960+01.65, 103.28' LT
640-010A	**RIPRAP/EROSION CONTROL GEOTEXTILE**
19 SY	STA. 5960+01.65, 103.28' LT
S913-05A	**SP DITCH BERM**
8.4 CY	STA. 5959+20, 4.10' RT
4.9 CY	STA. 5959+20, 96.75' LT
4.9 CY	STA. 5959+80, 99.20' LT
8.7 CY	STA. 5960+40, 4.37' RT
4.9 CY	STA. 5960+40, 99.72' LT
4.9 CY	STA. 5961+00, 100.05' LT
9.0 CY	STA. 5961+60, 3.74' RT
4.9 CY	STA. 5961+60, 101.40' LT
4.9 CY	STA. 5962+20, 102.06' LT
11.3 CY	STA. 5962+80, 2.95' RT
4.9 CY	STA. 5962+80, 102.20' LT
4.9 CY	STA. 5963+40, 100.22' LT
9.8 CY	STA. 5964+00, 3.61' RT
4.9 CY	STA. 5964+00, 100.11' LT
4.9 CY	STA. 5966+50, 97.67' LT
4.9 CY	STA. 5970+89, 90.49' LT

NOTES:

1. SEE SP DITCH BERM DETAIL FOR DITCH BERM DIMENSIONS.
2. IN PHASE 2, REMOVE EXISTING CULVERT, MODIFY INLET OR JUNCTION BOX OPENING TO CONNECT PROPOSED CULVERT AND CONSTRUCT UNDER PHASE 2 ROADWAY.
3. SEE PIPE COVER AND DAYLIGHT DETAILS FOR GRADING INFORMATION.

Scale (Feet)
50 0 50 100

REVISIONS			
NO.	DATE	BY	DESCRIPTION

DESIGNED D. ABEDI	SCALES SHOWN ARE FOR 11" X 17" PRINTS ONLY
DESIGN CHECKED C. MCALISTER	
DETAILED P. CONSALVO	CADD FILE NAME 24149_DrpI_D202A.DGN
DRAWING CHECKED C. MCALISTER	DRAWING DATE: November 21, 2025

IDAHO TRANSPORTATION DEPARTMENT
YOUR Safety→YOUR Mobility→YOUR Economic Opportunity
DAVID EVANS AND ASSOCIATES INC.

PROJECT NO.	DRAINAGE PLAN	ENGLISH
A024(149)	US 20, BONNEVILLE COUNTY LINE TO MP 291 STA. 5959+00 TO STA. 5971+00 PHASE 2	COUNTY BINGHAM/BONNEVILLE KEY NUMBER 24149 SHEET 245 OF 441

NOT APPROVED FOR INTERMEDIATE CONSTRUCTION

November 21, 2025 4:49:44 PM
pw://itd-pw.bentley.com:itd-pw-01/Documents/District 6/Projects/prj24394/Project_Development/Plan Sheets/Package 2 (KN 24149)/Drainage/24149_DrpI_D202A

T.3N., R.33E., B.M.

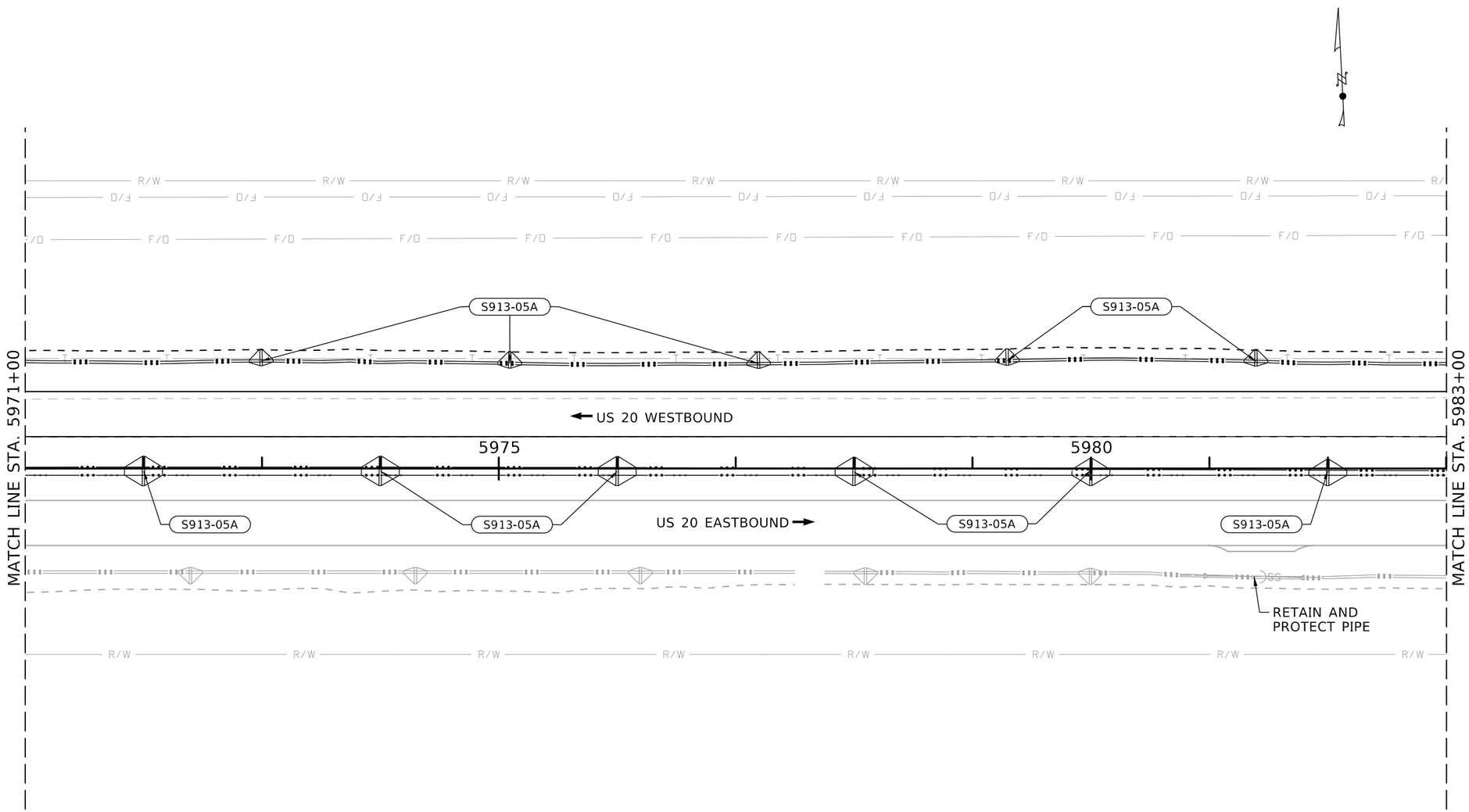

S913-05A	SP DITCH BERM
12.5 CY	STA. 5972+00, 2.22' RT
4.9 CY	STA. 5973+00, 90.86' LT
12.5 CY	STA. 5974+00, 2.23' RT
4.9 CY	STA. 5975+10, 88.78' LT
12.1 CY	STA. 5976+00, 2.43' RT
4.9 CY	STA. 5977+20, 88.58' LT
11.5 CY	STA. 5978+00, 2.84' RT
4.9 CY	STA. 5979+30, 91.10' LT
10.7 CY	STA. 5980+00, 2.99' RT
4.9 CY	STA. 5981+40, 90.54' LT
9.9 CY	STA. 5982+00, 2.09' RT

NOTES:

1. SEE SP DITCH BERM DETAIL FOR DITCH BERM DIMENSIONS.

Scale (Feet)
50 0 50 100

REVISIONS			
NO.	DATE	BY	DESCRIPTION

DESIGNED D. ABEDI
DESIGN CHECKED C. MCALISTER
DETAILED P. CONSALVO
DRAWING CHECKED C. MCALISTER

SCALES SHOWN ARE FOR 11" X 17" PRINTS ONLY
CADD FILE NAME 24149_DrpI_D202A.DGN
DRAWING DATE: November 21, 2025

IDAHO TRANSPORTATION DEPARTMENT
YOUR Safety→YOUR Mobility→YOUR Economic Opportunity
DAVID EVANS AND ASSOCIATES INC.

PROJECT NO. A024(149)

DRAINAGE PLAN
US 20, BONNEVILLE COUNTY
LINE TO MP 291
STA. 5971+00 TO STA. 5983+00
PHASE 2

ENGLISH
COUNTY BINGHAM/BONNEVILLE
KEY NUMBER 24149
SHEET 246 OF 441

NOT APPROVED
INTERMEDIATE
FOR CONSTRUCTION

November 21, 2025 4:49:48 PM
pw://itd-pw.bentley.com:itd-pw-01/Documents/District 6/Projects/prj24394/Project_Development/Plan Sheets/Package 2 (KN 24149)/Drainage/24149_DrpI_D202A

T.3N., R.33E., B.M.

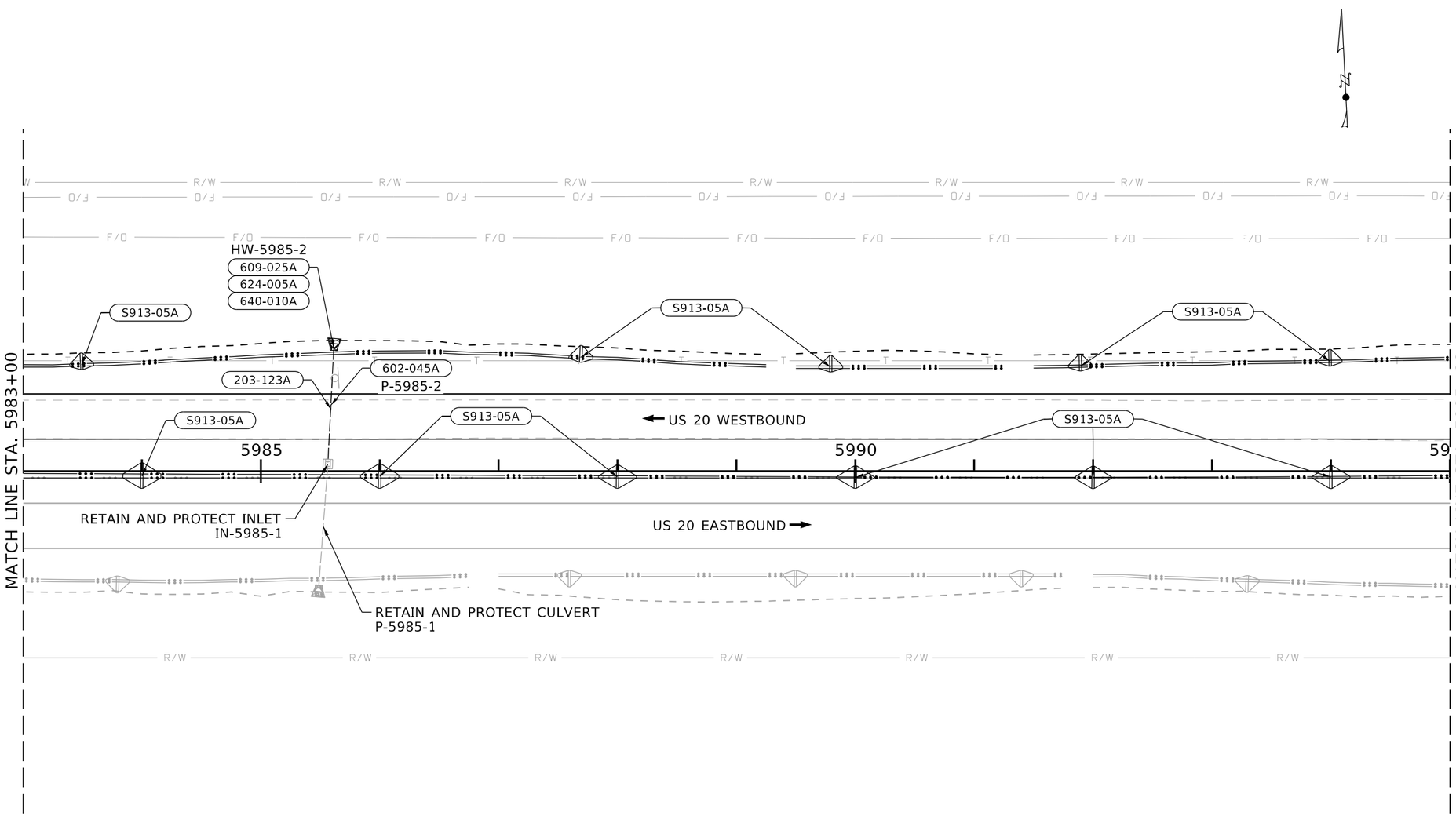

203-123A	**REMOVAL OF MISCELLANEOUS ITEMS (PIPE)**
72 FT	STA. 5985+56.41, 7.65' LT TO STA. 5985+60.51, 79.43' LT
602-045A	**24" PIPE CULVERT**
97 FT	STA. 5985+56.33, 7.89' LT TO STA. 5985+63.40, 96.13' LT
609-025A	**MINOR STRUCTURES (24" CONCRETE HEADWALL)**
1 EACH	STA. 5985+63.40, 96.13' LT
624-005A	**LOOSE RIPRAP (CLASS I)**
4.7 CY	STA. 5985+63.40, 96.13' LT
640-010A	**RIPRAP/EROSION CONTROL GEOTEXTILE**
14 SY	STA. 5985+63.40, 96.13' LT
S913-05A	**SP DITCH BERM**
4.9 CY	STA. 5983+50, 89.43' LT
9.1 CY	STA. 5984+00, 4.41' RT
4.9 CY	STA. 5985+60, 100.85' LT
8.4 CY	STA. 5986+00, 4.42' RT
4.9 CY	STA. 5987+70, 95.65' LT
7.6 CY	STA. 5988+00, 4.82' RT
4.9 CY	STA. 5989+80, 87.45' LT
6.8 CY	STA. 5990+00, 5.24' RT
4.9 CY	STA. 5991+90, 88.35' LT
6.5 CY	STA. 5992+00, 5.40' RT
7.1 CY	STA. 5994+00, 5.06' RT
4.9 CY	STA. 5994+00, 92.41' LT

NOTES:

1. SEE SP DITCH BERM DETAIL FOR DITCH BERM DIMENSIONS.
2. IN PHASE 2, REMOVE EXISTING CULVERT, MODIFY INLET OR JUNCTION BOX OPENING TO CONNECT PROPOSED CULVERT AND CONSTRUCT UNDER PHASE 2 ROADWAY.
3. SEE PIPE COVER AND DAYLIGHT DETAILS FOR GRADING INFORMATION.

Scale (Feet)
50 0 50 100

REVISIONS			
NO.	DATE	BY	DESCRIPTION

DESIGNED D. ABEDI
DESIGN CHECKED C. MCALISTER
DETAILED P. CONSALVO
DRAWING CHECKED C. MCALISTER

SCALES SHOWN ARE FOR 11" X 17" PRINTS ONLY
CADD FILE NAME 24149_DrpI_D202A.DGN
DRAWING DATE: November 21, 2025

IDAHO TRANSPORTATION DEPARTMENT
YOUR Safety→YOUR Mobility→YOUR Economic Opportunity
DAVID EVANS AND ASSOCIATES INC.

PROJECT NO. A024(149)

DRAINAGE PLAN
US 20, BONNEVILLE COUNTY
LINE TO MP 291
STA. 5983+00 TO STA. 5995+00
PHASE 2

ENGLISH
COUNTY BINGHAM/BONNEVILLE
KEY NUMBER 24149
SHEET 247 OF 441

NOT APPROVED
INTERMEDIATE
FOR CONSTRUCTION

November 21, 2025 4:49:52 PM
pw://itd-pw.bentley.com:itd-pw-01/Documents/District 6/Projects/prj24394/Project_Development/Plan Sheets/Package 2 (KN 24149)/Drainage/24149_DrpI_D202A

T.3N., R.34E., B.M.

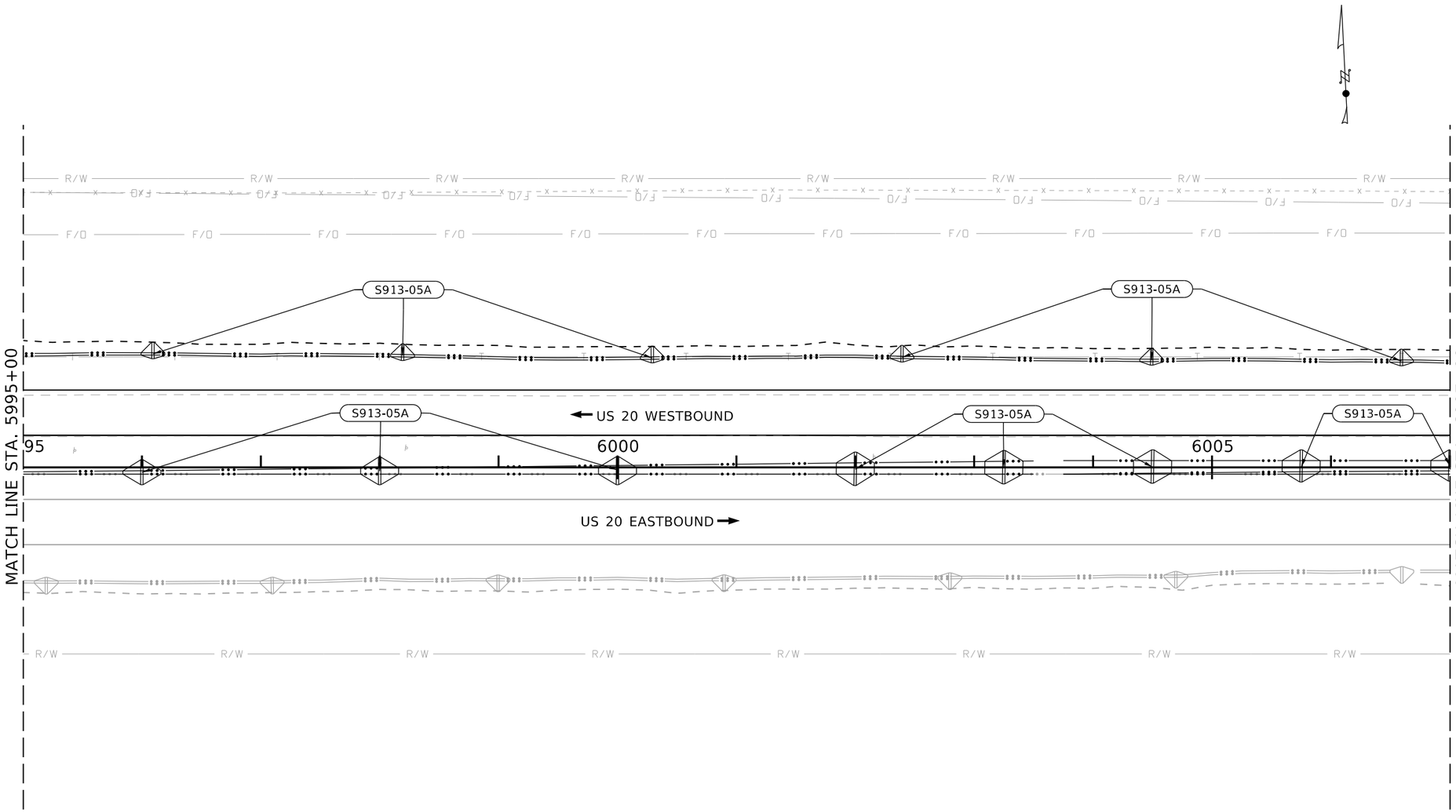

S913-05A	SP DITCH BERM
8.7 CY	STA. 5996+00, 4.22' RT
4.9 CY	STA. 5996+10, 95.45' LT
10.8 CY	STA. 5998+00, 3.04' RT
4.9 CY	STA. 5998+20, 93.93' LT
12.9 CY	STA. 6000+00, 2.06' RT
4.9 CY	STA. 6000+30, 92.01' LT
14.9 CY	STA. 6002+00, 1.62' RT
4.9 CY	STA. 6002+40, 92.61' LT
16.2 CY	STA. 6003+25, 0.00' RT
15.9 CY	STA. 6004+50, 0.00' RT
4.9 CY	STA. 6004+50, 89.99' LT
14.8 CY	STA. 6005+75, 0.00' RT
4.9 CY	STA. 6006+60, 89.42' LT
14.1 CY	STA. 6007+00, 1.38' RT

NOTES:

1. SEE SP DITCH BERM DETAIL FOR DITCH BERM DIMENSIONS.

Scale (Feet)
50 0 50 100

NOT APPROVED
INTERMEDIATE
FOR CONSTRUCTION

REVISIONS			
NO.	DATE	BY	DESCRIPTION

DESIGNED D. ABEDI
DESIGN CHECKED C. MCALISTER
DETAILED P. CONSALVO
DRAWING CHECKED C. MCALISTER

SCALES SHOWN ARE FOR 11" X 17" PRINTS ONLY
CADD FILE NAME 24149_DrpI_D202A.DGN
DRAWING DATE: November 21, 2025

IDAHO TRANSPORTATION DEPARTMENT
YOUR Safety→YOUR Mobility→YOUR Economic Opportunity
DAVID EVANS AND ASSOCIATES INC.

PROJECT NO.
A024(149)

DRAINAGE PLAN
US 20, BONNEVILLE COUNTY
LINE TO MP 291
STA. 5995+00 TO STA. 6007+00
PHASE 2

ENGLISH
COUNTY BINGHAM/BONNEVILLE
KEY NUMBER 24149
SHEET 248 OF 441

November 21, 2025 4:49:57 PM
pw://itd-pw.bentley.com:itd-pw-01/Documents/District 6/Projects/prj24394/Project_Development/Plan Sheets/Package 2 (KN 24149)/Drainage/24149_DrpI_D202A

T.3N., R.34E., B.M.

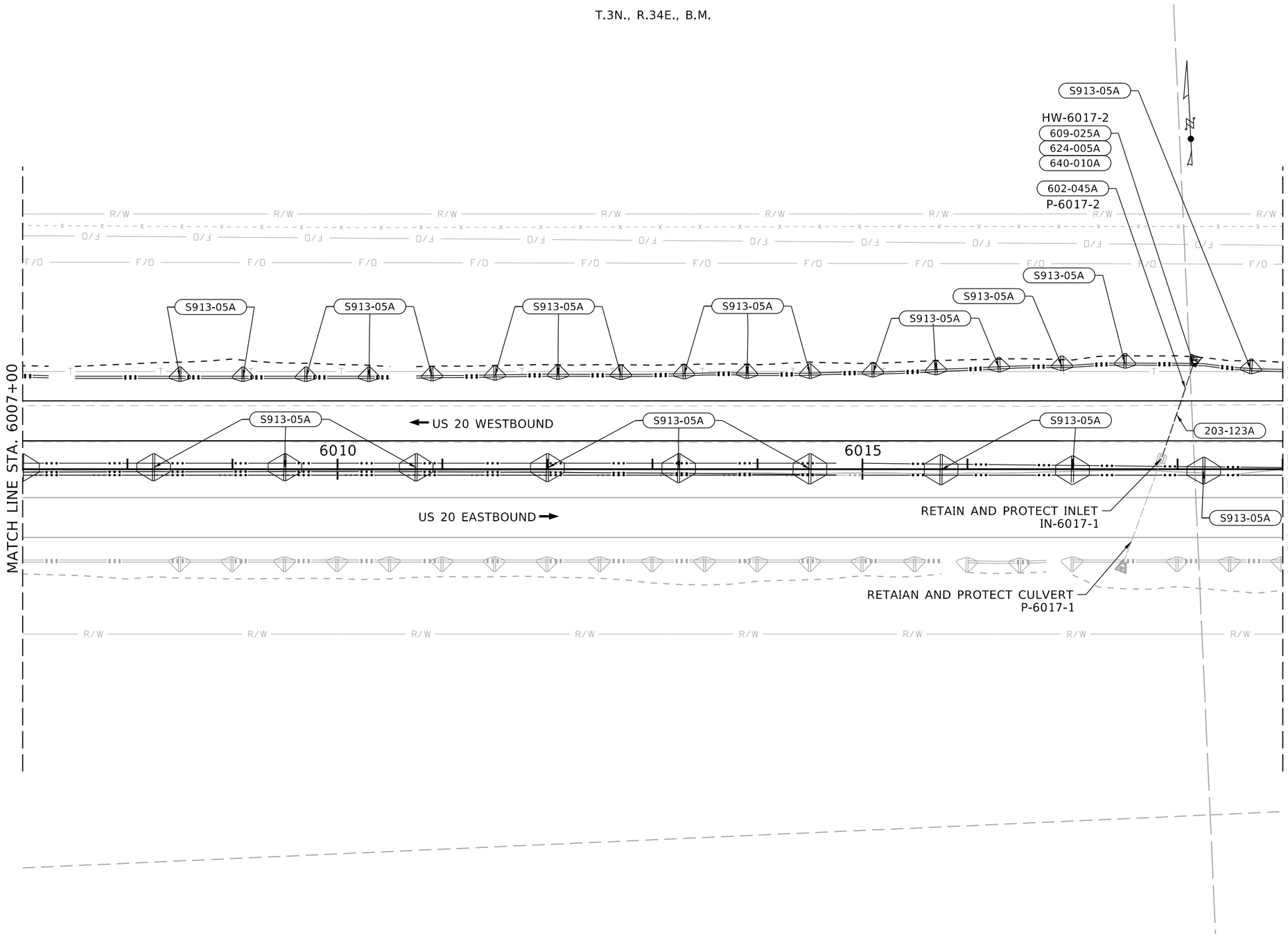

203-123A REMOVAL OF MISCELLANEOUS ITEMS (PIPE)
70 FT — STA. 6017+85.23, 11.53' LT TO STA. 6018+08.50, 77.64' LT

602-045A 24" PIPE CULVERT
94 FT — STA. 6017+85.17, 11.53' LT TO STA. 6018+15.15, 100.16' LT

609-025A MINOR STRUCTURES (24" CONCRETE HEADWALL)
1 EACH — STA. 6018+15.15, 100.16' LT

624-005A LOOSE RIPRAP (CLASS I)
4.7 CY — STA. 6018+15.15, 100.16' LT

640-010A RIPRAP/EROSION CONTROL GEOTEXTILE
14 SY — STA. 6018+15.15, 100.16' LT

S913-05A SP DITCH BERM

13.5 CY	STA. 6008+25, 1.51' RT
4.9 CY	STA. 6008+50, 87.45' LT
4.9 CY	STA. 6009+10, 87.45' LT
14.7 CY	STA. 6009+50, 1.67' RT
4.9 CY	STA. 6009+70, 87.45' LT
4.9 CY	STA. 6010+30, 87.45' LT
16.0 CY	STA. 6010+75, 1.56' RT
4.9 CY	STA. 6010+90, 88.07' LT
4.9 CY	STA. 6011+50, 88.80' LT
16.2 CY	STA. 6012+00, 1.25' RT
4.9 CY	STA. 6012+10, 89.42' LT
4.9 CY	STA. 6012+70, 89.28' LT
15.1 CY	STA. 6013+25, 0.86' RT
4.9 CY	STA. 6013+30, 90.02' LT
4.9 CY	STA. 6013+90, 90.46' LT
14.2 CY	STA. 6014+50, 0.26' RT
4.9 CY	STA. 6014+50, 90.43' LT
4.9 CY	STA. 6015+10, 91.75' LT
13.7 CY	STA. 6015+75, 0.39' RT
4.9 CY	STA. 6015+70, 93.87' LT
4.9 CY	STA. 6016+30, 96.54' LT
4.9 CY	STA. 6016+90, 97.86' LT
4.9 CY	STA. 6017+50, 100.21' LT
13.5 CY	STA. 6017+00, 0.98' RT
13.7 CY	STA. 6018+25, 1.68' RT
4.9 CY	STA. 6018+70, 94.97' LT

NOTES:

1. SEE SP DITCH BERM DETAIL FOR DITCH BERM DIMENSIONS.
2. IN PHASE 2, REMOVE EXISTING CULVERT, MODIFY INLET OR JUNCTION BOX OPENING TO CONNECT PROPOSED CULVERT AND CONSTRUCT UNDER PHASE 2 ROADWAY.
3. SEE PIPE COVER AND DAYLIGHT DETAILS FOR GRADING INFORMATION.

Scale (Feet)
50 0 50 100

NOT APPROVED FOR CONSTRUCTION
INTERMEDIATE

REVISIONS			
NO.	DATE	BY	DESCRIPTION

DESIGNED D. ABEDI
DESIGN CHECKED C. MCALISTER
DETAILED P. CONSALVO
DRAWING CHECKED C. MCALISTER

SCALES SHOWN ARE FOR 11" X 17" PRINTS ONLY
CADD FILE NAME 24149_DrpI_D202A.DGN
DRAWING DATE: November 21, 2025

IDAHO TRANSPORTATION DEPARTMENT
YOUR Safety→YOUR Mobility→YOUR Economic Opportunity
DAVID EVANS AND ASSOCIATES INC.

PROJECT NO. A024(149)

DRAINAGE PLAN
US 20, BONNEVILLE COUNTY
LINE TO MP 291
STA. 6007+00 TO STA. 6019+00
PHASE 2

ENGLISH
COUNTY BINGHAM/BONNEVILLE
KEY NUMBER 24149
SHEET 249 OF 441

November 21, 2025 4:50:02 PM
pw://itd-pw.bentley.com:itd-pw-01/Documents/District 6/Projects/prj24394/Project_Development/Plan Sheets/Package 2 (KN 24149)/Drainage/24149_DrpI_D202A

T.3N., R.34E., B.M.

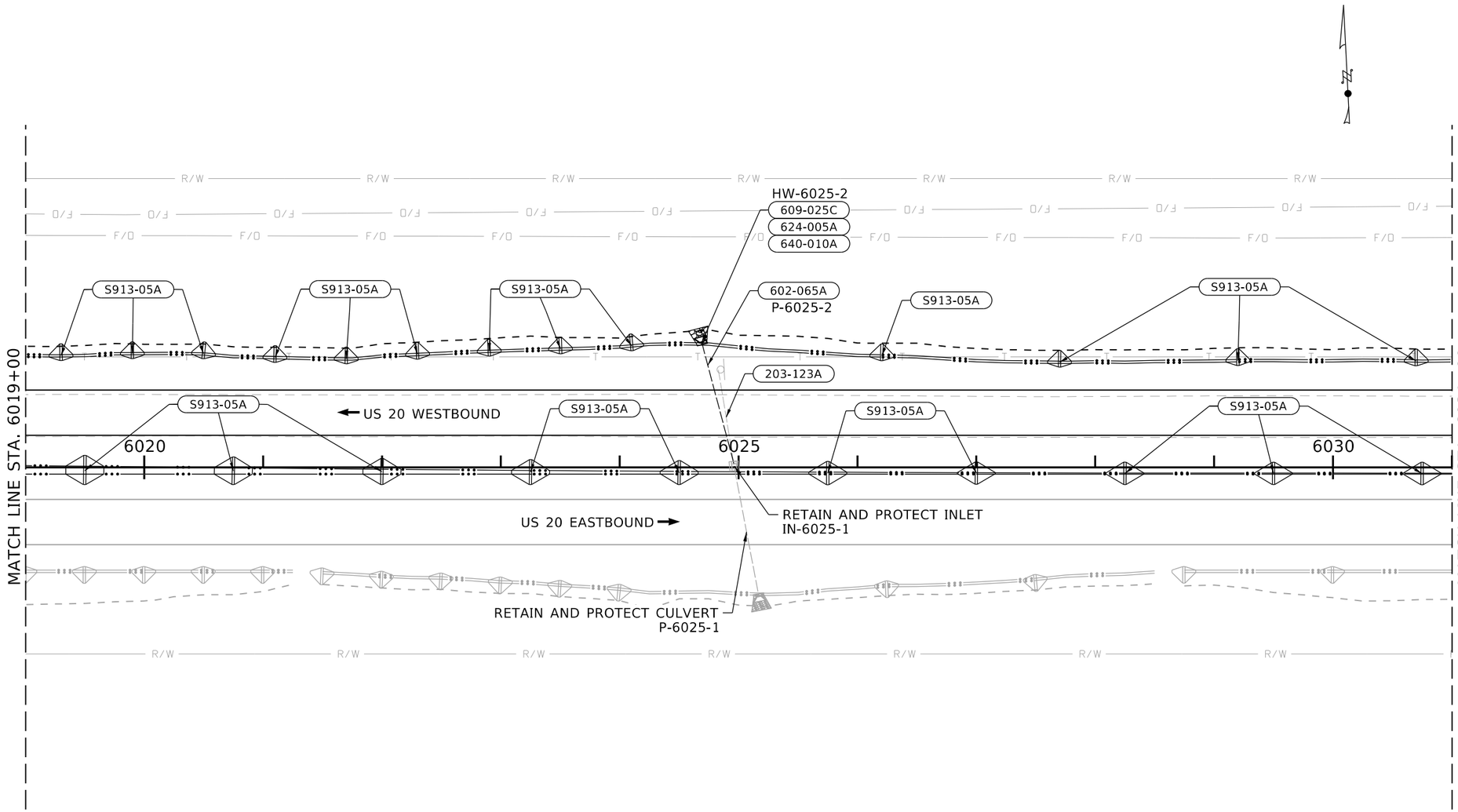

203-123A	**REMOVAL OF MISCELLANEOUS ITEMS**
81 FT	STA. 6024+82.94, 82.09' LT TO STA. 6024+96.13, 2.27' LT
602-065A	**36" PIPE CULVERT**
107 FT	STA. 6024+70.33, 103.61' LT TO STA. 6024+95.74, 2.98' LT
609-025C	**MINOR STRUCTURES (36" CONCRETE HEADWALL)**
1 EACH	STA. 6024+70.14, 103.58' LT
624-005A	**LOOSE RIPRAP (CLASS I)**
10.4 CY	STA. 6024+70.14, 103.58' LT
640-010A	**RIPRAP/EROSION CONTROL GEOTEXTILE**
25 SY	STA. 6024+70.14, 103.58' LT
S913-05A	**SP DITCH BERM**
4.9 CY	STA. 6019+30, 93.88' LT
12.3 CY	STA. 6019+50, 2.71' RT
4.9 CY	STA. 6019+90, 95.62' LT
4.9 CY	STA. 6020+50, 95.49' LT
11.0 CY	STA. 6020+75, 3.00' RT
4.9 CY	STA. 6021+10, 92.37' LT
4.9 CY	STA. 6021+70, 91.19' LT
9.9 CY	STA. 6022+00, 3.56' RT
4.9 CY	STA. 6022+30, 95.05' LT
4.9 CY	STA. 6022+90, 97.68' LT
8.9 CY	STA. 6023+25, 4.12' RT
4.9 CY	STA. 6023+50, 99.58' LT
4.9 CY	STA. 6024+10, 102.20' LT
8.1 CY	STA. 6024+50, 4.53' RT
7.5 CY	STA. 6025+75, 4.85' RT
4.9 CY	STA. 6026+20, 93.75 LT
6.9 CY	STA. 6027+00, 4.87' RT
4.9 CY	STA. 6027+70, 88.42' LT
6.8 CY	STA. 6028+25, 5.10' RT
4.9 CY	STA. 6029+20, 89.78' LT
6.7 CY	STA. 6029+50, 5.15' RT
4.9 CY	STA. 6030+70, 89.52' LT
6.7 CY	STA. 6030+75, 5.20' RT

NOTES:

1. SEE SP DITCH BERM DETAIL FOR DITCH BERM DIMENSIONS.
2. IN PHASE 2, REMOVE EXISTING CULVERT, MODIFY INLET OR JUNCTION BOX OPENING TO CONNECT PROPOSED CULVERT AND CONSTRUCT UNDER PHASE 2 ROADWAY.
3. SEE PIPE COVER AND DAYLIGHT DETAILS FOR GRADING INFORMATION.

Scale (Feet)
50 0 50 100

REVISIONS			
NO.	DATE	BY	DESCRIPTION

DESIGNED D. ABEDI
DESIGN CHECKED C. MCALISTER
DETAILED P. CONSALVO
DRAWING CHECKED C. MCALISTER

SCALES SHOWN ARE FOR 11" X 17" PRINTS ONLY
CADD FILE NAME 24149_DrpI_D202A.DGN
DRAWING DATE: November 21, 2025

IDAHO TRANSPORTATION DEPARTMENT
YOUR Safety→YOUR Mobility→YOUR Economic Opportunity
DAVID EVANS AND ASSOCIATES INC.

PROJECT NO. A024(149)

DRAINAGE PLAN
US 20, BONNEVILLE COUNTY
LINE TO MP 291
STA. 6019+00 TO STA. 6031+00
PHASE 2

ENGLISH
COUNTY BINGHAM/BONNEVILLE
KEY NUMBER 24149
SHEET 250 OF 441

NOT APPROVED
INTERMEDIATE
FOR CONSTRUCTION

November 21, 2025 4:50:04 PM
pw://itd-pw.bentley.com:itd-pw-01/Documents/District 6/Projects/prj24394/Project_Development/Plan Sheets/Package 2 (KN 24149)/Drainage/24149_DrpI_D202A

T.3N., R.34E., B.M.

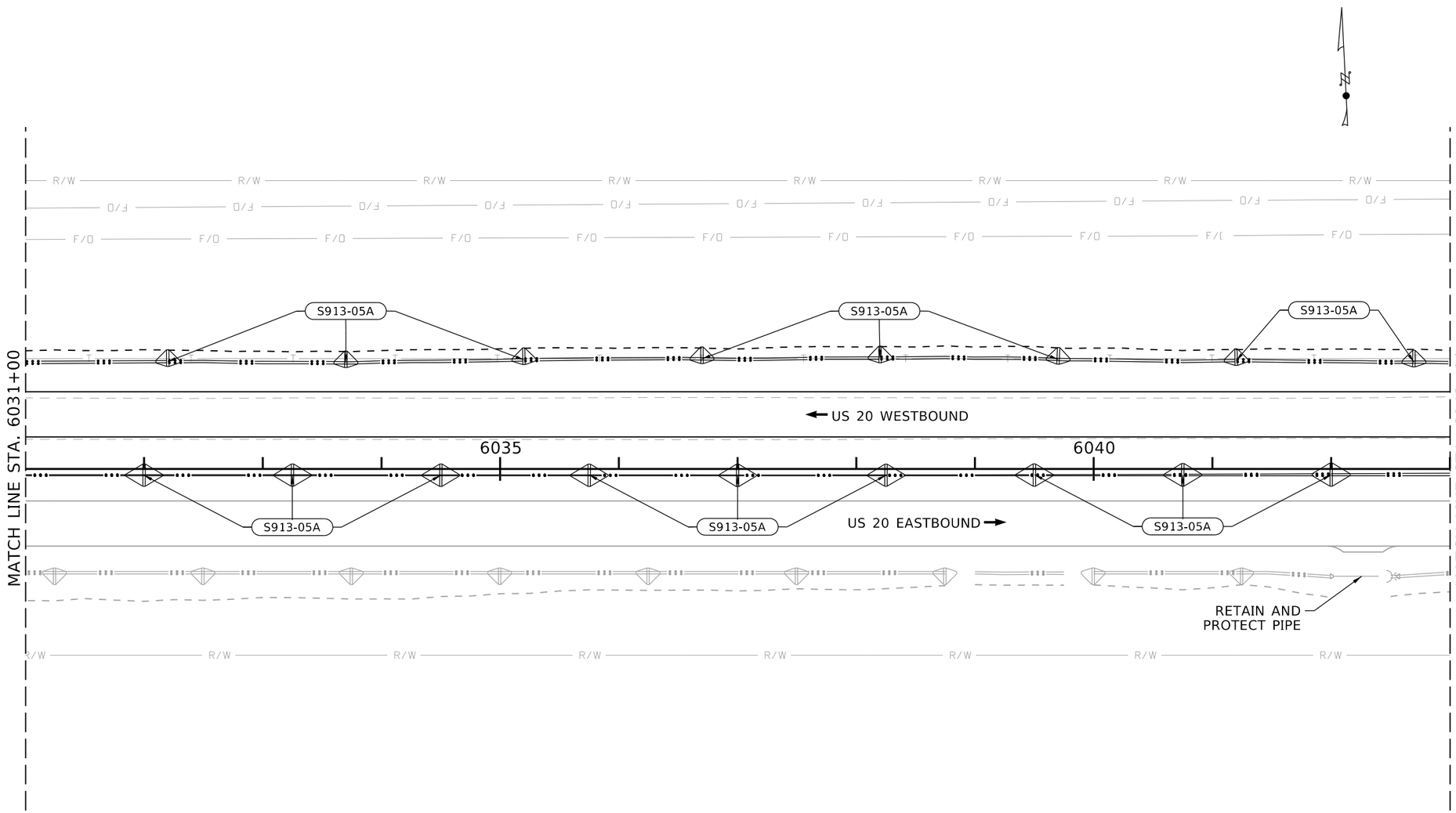

S913-05A	SP DITCH BERM
6.7 CY	STA. 6032+00, 5.25' RT
4.9 CY	STA. 6032+20, 90.43' LT
6.7 CY	STA. 6033+25, 5.30' RT
4.9 CY	STA. 6033+70, 89.42' LT
6.7 CY	STA. 6034+50, 5.36' RT
4.9 CY	STA. 6035+20, 91.95' LT
6.7 CY	STA. 6035+75, 5.41' RT
4.9 CY	STA. 6036+70, 92.77' LT
6.7 CY	STA. 6037+00, 5.46' RT
4.9 CY	STA. 6038+20, 93.45' LT
6.6 CY	STA. 6038+25, 5.32' RT
6.8 CY	STA. 6039+50, 5.24' RT
4.9 CY	STA. 6039+70, 92.33' LT
7.1 CY	STA. 6040+75, 5.16' RT
4.9 CY	STA. 6041+20, 91.27' LT
7.6 CY	STA. 6042+00, 4.83' RT
4.9 CY	STA. 6042+70, 90.05' LT

NOTES:

1. SEE SP DITCH BERM DETAIL FOR DITCH BERM DIMENSIONS.

Scale (Feet)
50 0 50 100

REVISIONS			
NO.	DATE	BY	DESCRIPTION

DESIGNED D. ABEDI
DESIGN CHECKED C. MCALISTER
DETAILED P. CONSALVO
DRAWING CHECKED C. MCALISTER

SCALES SHOWN ARE FOR 11" X 17" PRINTS ONLY
CADD FILE NAME 24149_DrpI_D202B.DGN
DRAWING DATE: November 21, 2025

IDAHO TRANSPORTATION DEPARTMENT
YOUR Safety→YOUR Mobility→YOUR Economic Opportunity
DAVID EVANS AND ASSOCIATES INC.

PROJECT NO. A024(149)

DRAINAGE PLAN
US 20, BONNEVILLE COUNTY
LINE TO MP 291
STA. 6031+00 TO STA. 6043+00
PHASE 2

ENGLISH
COUNTY BINGHAM/BONNEVILLE
KEY NUMBER 24149
SHEET 251 OF 441

NOT APPROVED
INTERMEDIATE FOR CONSTRUCTION

November 21, 2025 4:50:30 PM
pw://itd-pw.bentley.com:itd-pw-01/Documents/District 6/Projects/prj24394/Project_Development/Plan Sheets/Package 2 (KN 24149)/Drainage/24149_DrpI_D202B

T.3N., R.34E., B.M.

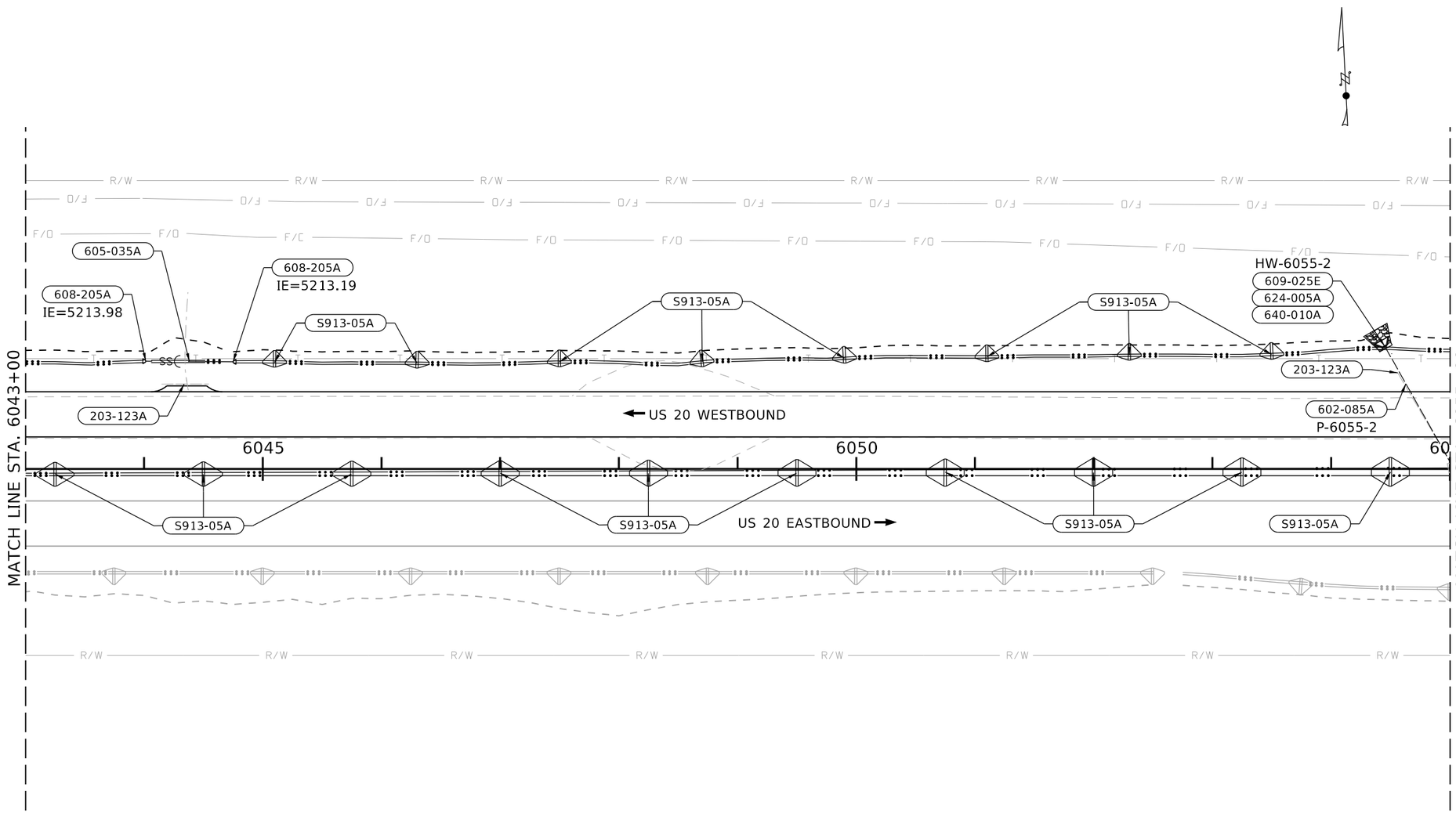

203-123A REMOVAL OF MISCELLANEOUS ITEMS (PIPE)

40 FT	STA. 6044+14.72, 71.47' LT TO STA. 6044+54.58, 71.84' LT
87 FT	STA. 6054+56.11, 80.95' LT TO STA. 6055+00.00, 6.15' LT

602-085A 48" PIPE CULVERT

115 FT	STA. 6054+46.29, 101.10' LT TO STA. 6055+00.00, 6.15' LT

605-035A 18" STORM SEWER PIPE

74 FT	STA. 6044+01.45, 90.81' LT TO STA. 6044+75.00, 90.28' LT

608-205A METAL SAFETY APRON (PARALLEL) (18")

1 EACH	STA. 6044+01.45, 90.81' LT
1 EACH	STA. 6044+75.00, 90.28' LT

609-025E MINOR STRUCTURES (48" CONCRETE HEADWALL)

1 EACH	STA. 6054+46.29, 101.10' LT

624-005A LOOSE RIPRAP (CLASS I)

18.5 CY	STA. 6054+46.29, 101.10' LT

640-010A RIPRAP/EROSION CONTROL GEOTEXTILE

40 SY	STA. 6054+46.29, 101.10' LT

S913-05A SP DITCH BERM

8.0 CY	STA. 6043+25, 4.61' RT
8.4 CY	STA. 6044+50, 4.37' RT
4.9 CY	STA. 6045+10, 89.81' LT
8.9 CY	STA. 6045+75, 4.14' RT
4.9 CY	STA. 6046+30, 89.07' LT
9.3 CY	STA. 6047+00, 3.89' RT
4.9 CY	STA. 6047+50, 90.13' LT
9.8 CY	STA. 6048+25, 3.63' RT
4.9 CY	STA. 6048+70, 90.19' LT
10.2 CY	STA. 6049+50, 3.42' RT
4.9 CY	STA. 6049+90, 93.20' LT
10.7 CY	STA. 6050+75, 3.20' RT
4.9 CY	STA. 6051+10, 94.51' LT
11.1 CY	STA. 6052+00, 2.95' RT
4.9 CY	STA. 6052+30, 95.74' LT
11.6 CY	STA. 6053+25, 2.71' RT
4.9 CY	STA. 6053+50, 96.45' LT
11.9 CY	STA. 6054+50, 2.50' RT

NOTES:

1. SEE SP DITCH BERM DETAIL FOR DITCH BERM DIMENSIONS.
2. IN PHASE 2, REMOVE EXISTING CULVERT, MODIFY INLET OR JUNCTION BOX OPENING TO CONNECT PROPOSED CULVERT AND CONSTRUCT UNDER PHASE 2 ROADWAY.
3. SEE PIPE COVER AND DAYLIGHT DETAILS FOR GRADING INFORMATION.

Scale (Feet)
50 0 50 100

REVISIONS			
NO.	DATE	BY	DESCRIPTION

DESIGNED D. ABEDI
DESIGN CHECKED C. MCALISTER
DETAILED P. CONSALVO
DRAWING CHECKED C. MCALISTER

SCALES SHOWN ARE FOR 11" X 17" PRINTS ONLY
CADD FILE NAME 24149_DrpI_D202B.DGN
DRAWING DATE: November 21, 2025

IDAHO TRANSPORTATION DEPARTMENT
YOUR Safety→YOUR Mobility→YOUR Economic Opportunity
DAVID EVANS AND ASSOCIATES INC.

PROJECT NO. A024(149)

DRAINAGE PLAN
US 20, BONNEVILLE COUNTY
LINE TO MP 291
STA. 6043+00 TO STA. 6055+00
PHASE 2

ENGLISH
COUNTY BINGHAM/BONNEVILLE
KEY NUMBER 24149
SHEET 252 OF 441

NOT APPROVED
INTERMEDIATE
FOR CONSTRUCTION

November 21, 2025 4:50:33 PM
pw://itd-pw.bentley.com:itd-pw-01/Documents/District 6/Projects/prj24394/Project_Development/Plan Sheets/Package 2 (KN 24149)/Drainage/24149_DrpI_D202B

T.3N., R.34E., B.M.

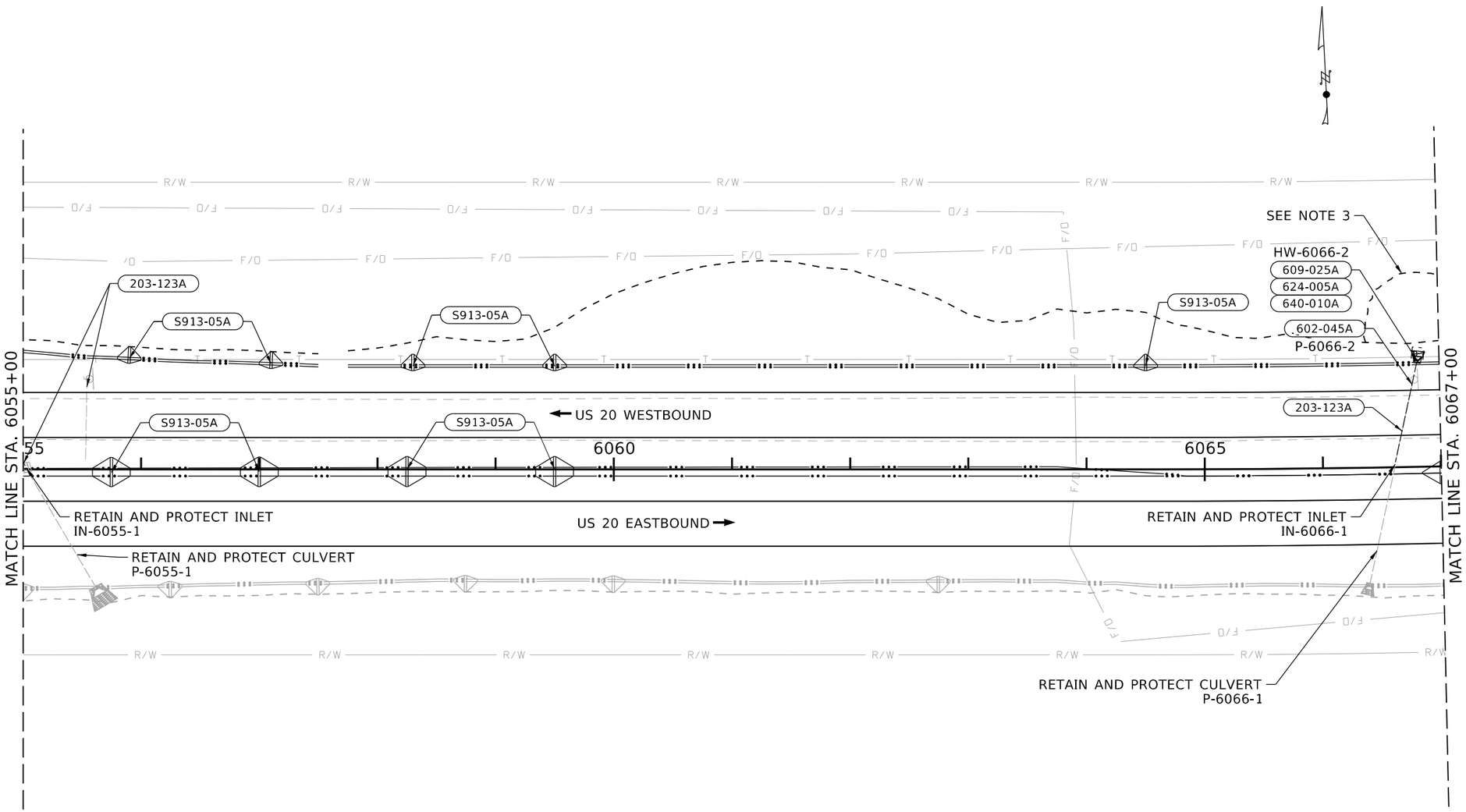

203-123A REMOVAL OF MISCELLANEOUS ITEMS (PIPE)

4 FT	STA. 6055+00.00, 6.15' LT TO STA. 6055+01.95, 2.83' LT
69 FT	STA. 6055+53.05, 8.35' LT TO STA. 6055+54.26, 76.54' LT
73 FT	STA. 6066+61.34, 4.23' LT TO STA. 6066+77.87, 74.52' LT

602-045A 24" PIPE CULVERT

88 FT	STA. 6066+61.55, 4.82' LT TO STA. 6066+82.77, 95.88' LT

609-025A MINOR STRUCTURES (24" CONCRETE HEADWALL)

1 EACH	STA. 6066+82.77, 95.88' LT

624-005A LOOSE RIPRAP (CLASS I)

4.7 CY	STA. 6066+82.77, 95.88' LT

640-010A RIPRAP/EROSION CONTROL GEOTEXTILE

14 SY	STA. 6066+82.77, 95.88' LT

S913-05A SP DITCH BERM

12.3 CY	STA. 6055+75, 2.70' RT
4.9 CY	STA. 6055+90, 93.75' LT
12.6 CY	STA. 6057+00, 1.95' RT
4.9 CY	STA. 6057+10, 89.33' LT
12.8 CY	STA. 6058+25, 1.96' RT
4.9 CY	STA. 6058+30, 87.45' LT
13.0 CY	STA. 6059+50, 1.95' RT
4.9 CY	STA. 6059+50, 87.45' LT
4.9 CY	STA. 6064+50, 87.45' LT

NOTES:

1. SEE SP DITCH BERM DETAIL FOR DITCH BERM DIMENSIONS.
2. IN PHASE 2, REMOVE EXISTING CULVERT, MODIFY INLET OR JUNCTION BOX OPENING TO CONNECT PROPOSED CULVERT AND CONSTRUCT UNDER PHASE 2 ROADWAY.
3. SEE PIPE COVER AND DAYLIGHT DETAILS FOR GRADING INFORMATION.

Scale (Feet)
50 0 50 100

NOT APPROVED
INTERMEDIATE
FOR CONSTRUCTION

REVISIONS			
NO.	DATE	BY	DESCRIPTION

DESIGNED D. ABEDI
DESIGN CHECKED C. MCALISTER
DETAILED P. CONSALVO
DRAWING CHECKED C. MCALISTER

SCALES SHOWN ARE FOR 11" X 17" PRINTS ONLY
CADD FILE NAME 24149_DrpI_D202B.DGN
DRAWING DATE: November 21, 2025

IDAHO TRANSPORTATION DEPARTMENT
YOUR Safety→YOUR Mobility→YOUR Economic Opportunity
DAVID EVANS AND ASSOCIATES INC.

PROJECT NO. A024(149)

DRAINAGE PLAN
US 20, BONNEVILLE COUNTY
LINE TO MP 291
STA. 6055+00 TO STA. 6067+00
PHASE 2

ENGLISH
COUNTY BINGHAM/BONNEVILLE
KEY NUMBER 24149
SHEET 253 OF 441

November 21, 2025 4:50:37 PM
pw://itd-pw.bentley.com:itd-pw-01/Documents/District 6/Projects/prj24394/Project_Development/Plan Sheets/Package 2 (KN 24149)/Drainage/24149_DrpI_D202B

T.3N., R.34E., B.M.

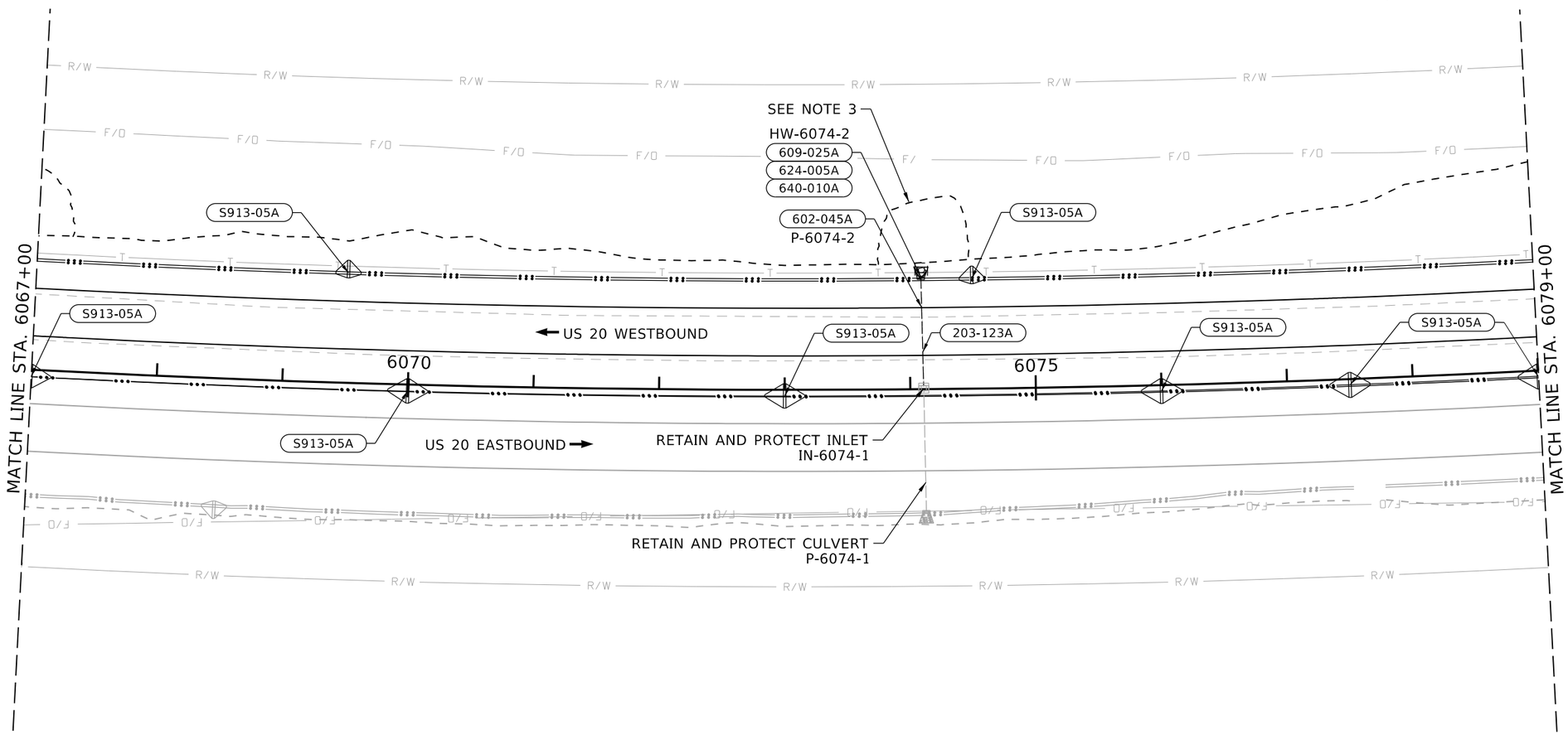

203-123A **REMOVAL OF MISCELLANEOUS ITEMS (PIPE)**
71 FT — STA. 6074+09.69, 73.28' LT TO STA. 6074+10.70, 2.30' LT

602-045A **24" PIPE CULVERT**
88 FT — STA. 6074+09.07, 93.30' LT TO STA. 6074+11.28, 1.13' LT

609-025A **MINOR STRUCTURES (24" CONCRETE HEADWALL)**
1 EACH — STA. 6066+82.77, 95.88' LT

624-005A **LOOSE RIPRAP (CLASS I)**
4.7 CY — STA. 6066+82.77, 95.88' LT

640-010A **RIPRAP/EROSION CONTROL GEOTEXTILE**
14 SY — STA. 6066+82.77, 95.88' LT

S913-05A **SP DITCH BERM**
6.8 CY — STA. 6067+00, 5.23' RT
4.9 CY — STA. 6069+50, 87.66' LT
7.1 CY — STA. 6070+00, 5.07' RT
7.4 CY — STA. 6073+00, 4.93' RT
4.9 CY — STA. 6074+50, 87.66' LT
7.7 CY — STA. 6076+00, 4.78' RT
7.8 CY — STA. 6077+50, 4.69' RT
7.9 CY — STA. 6079+00, 4.64' RT

NOTES:

1. SEE SP DITCH BERM DETAIL FOR DITCH BERM DIMENSIONS.
2. IN PHASE 2, REMOVE EXISTING CULVERT, MODIFY INLET OR JUNCTION BOX OPENING TO CONNECT PROPOSED CULVERT AND CONSTRUCT UNDER PHASE 2 ROADWAY.
3. SEE PIPE COVER AND DAYLIGHT DETAILS FOR GRADING INFORMATION.

Scale (Feet)
50 0 50 100

REVISIONS			
NO.	DATE	BY	DESCRIPTION

DESIGNED D. ABEDI
DESIGN CHECKED C. MCALISTER
DETAILED P. CONSALVO
DRAWING CHECKED C. MCALISTER

SCALES SHOWN ARE FOR 11" X 17" PRINTS ONLY
CADD FILE NAME 24149_DrpI_D202B.DGN
DRAWING DATE: November 21, 2025

IDAHO TRANSPORTATION DEPARTMENT
YOUR Safety→YOUR Mobility→YOUR Economic Opportunity
DAVID EVANS AND ASSOCIATES INC.

PROJECT NO.: A024(149)

DRAINAGE PLAN: US 20, BONNEVILLE COUNTY LINE TO MP 291
STA. 6067+00 TO STA. 6079+00
PHASE 2

ENGLISH
COUNTY BINGHAM/BONNEVILLE
KEY NUMBER 24149
SHEET 254 OF 441

NOT APPROVED
INTERMEDIATE
FOR CONSTRUCTION

November 21, 2025 4:50:40 PM
pw://itd-pw.bentley.com:itd-pw-01/Documents/District 6/Projects/prj24394/Project_Development/Plan Sheets/Package 2 (KN 24149)/Drainage/24149_DrpI_D202B

T.3N., R.34E., B.M.

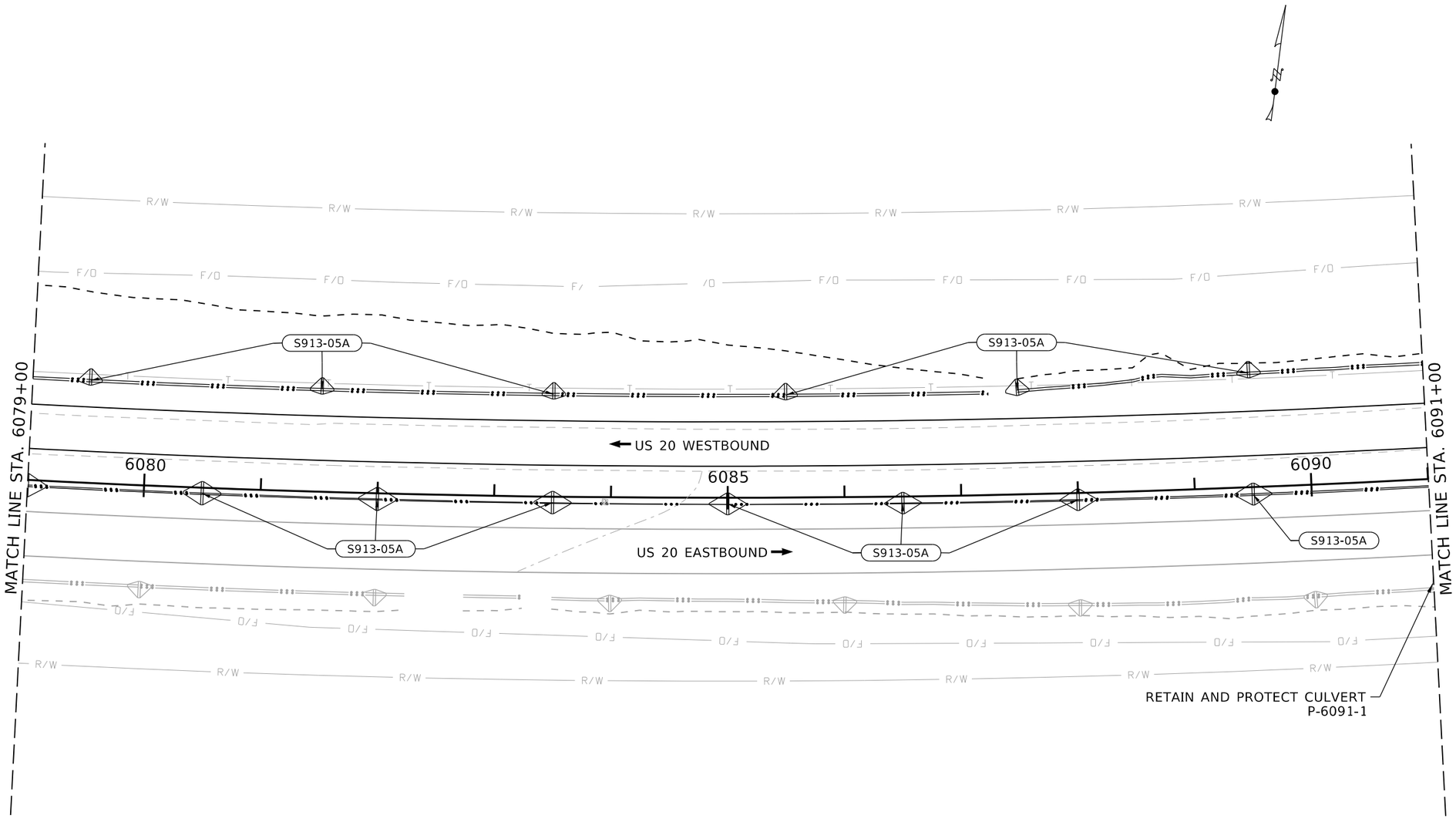

S913-05A	SP DITCH BERM
4.9 CY	STA. 6079+50, 87.66' LT
7.8 CY	STA. 6080+50, 4.69' RT
4.9 CY	STA. 6081+50, 87.66 LT
7.6 CY	STA. 6082+00, 4.83' RT
7.1 CY	STA. 6083+50, 5.07' RT
4.9 CY	STA. 6083+50, 87.66' LT
6.6 CY	STA. 6085+00, 5.31' RT
4.9 CY	STA. 6085+50, 87.66' LT
6.0 CY	STA. 6086+50, 5.66' RT
4.9 CY	STA. 6087+50, 88.70' LT
6.3 CY	STA. 6088+00, 5.82' RT
6.7 CY	STA. 6089+50, 6.03' RT
4.9 CY	STA. 6089+50, 97.70' LT
6.5 CY	STA. 6091+00, 5.95' RT

NOTES:

1. SEE SP DITCH BERM DETAIL FOR DITCH BERM DIMENSIONS.

Scale (Feet)
50 0 50 100

REVISIONS			
NO.	DATE	BY	DESCRIPTION

DESIGNED D. ABEDI
DESIGN CHECKED C. MCALISTER
DETAILED P. CONSALVO
DRAWING CHECKED C. MCALISTER

SCALES SHOWN ARE FOR 11" X 17" PRINTS ONLY
CADD FILE NAME 24149_DrpI_D202B.DGN
DRAWING DATE: November 21, 2025

IDAHO TRANSPORTATION DEPARTMENT
YOUR Safety→YOUR Mobility→YOUR Economic Opportunity
DAVID EVANS AND ASSOCIATES INC.

PROJECT NO. A024(149)

DRAINAGE PLAN
US 20, BONNEVILLE COUNTY LINE TO MP 291
STA. 6079+00 TO STA. 6091+00
PHASE 2

ENGLISH
COUNTY BINGHAM/BONNEVILLE
KEY NUMBER 24149
SHEET 255 OF 441

NOT APPROVED FOR INTERMEDIATE CONSTRUCTION

November 21, 2025 4:50:44 PM
pw://itd-pw.bentley.com:itd-pw-01/Documents/District 6/Projects/prj24394/Project_Development/Plan Sheets/Package 2 (KN 24149)/Drainage/24149_DrpI_D202B

T.3N., R.34E., B.M.

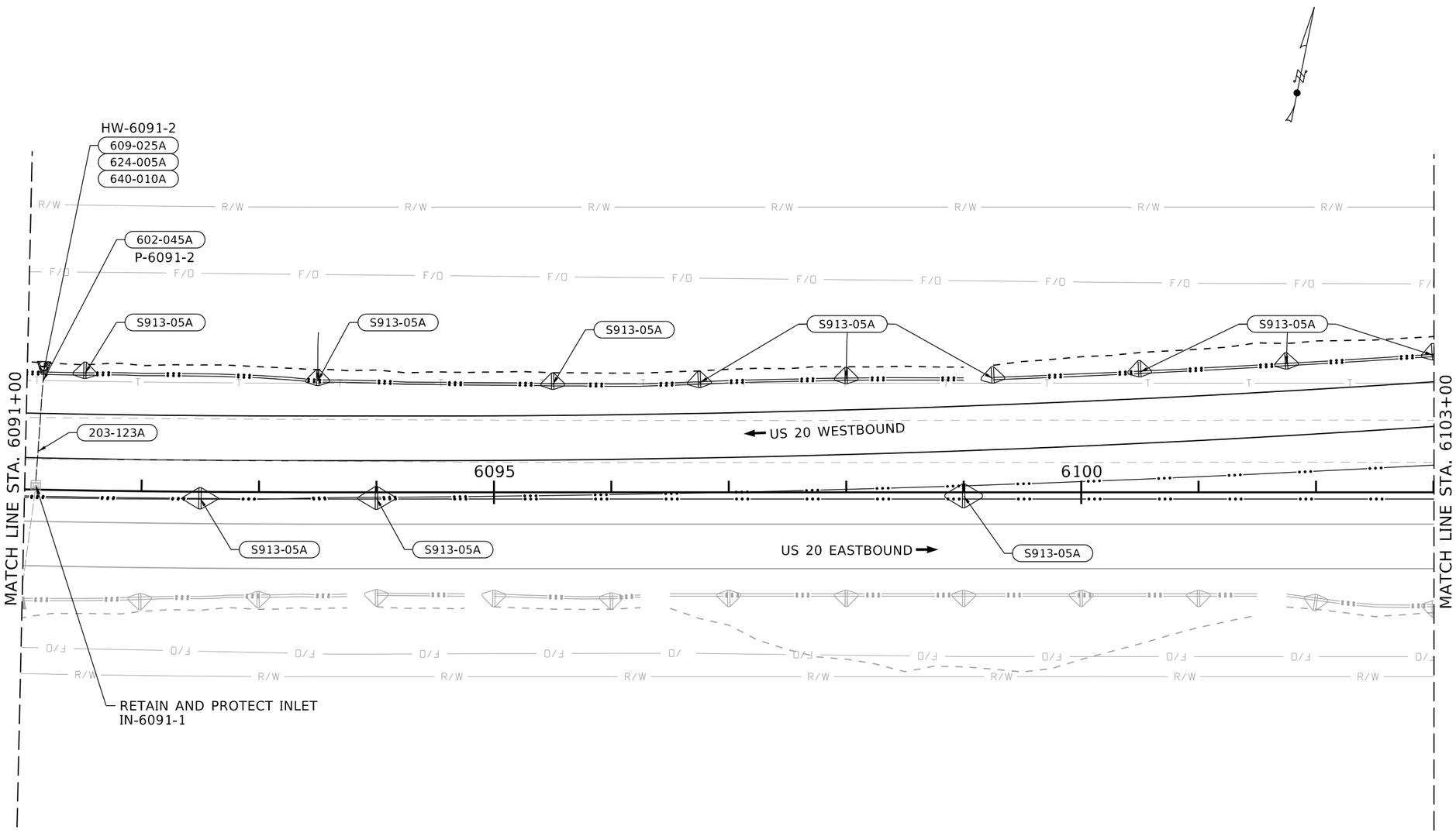

203-123A **REMOVAL OF MISCELLANEOUS ITEMS (PIPE)**
75 FT — STA. 6091+09.79, 5.12' LT TO STA. 6091+13.55, 79.18' LT

602-045A **24" PIPE CULVERT**
97 FT — STA. 6091+09.78, 3.68' LT TO STA. 6091+14.87, 104.10' LT

609-025A **MINOR STRUCTURES (24" CONCRETE HEADWALL)**
1 EACH — STA. 6091+14.87, 104.10' LT

624-005A **LOOSE RIPRAP (CLASS I)**
4.7 CY — STA. 6091+14.87, 104.10' LT

640-010A **RIPRAP/EROSION CONTROL GEOTEXTILE**
14 SY — STA. 6091+14.87, 104.10' LT

S913-05A **SP DITCH BERM**
4.9 CY — STA. 6091+50, 99.37' LT
6.0 CY — STA. 6092+50, 5.66' RT
4.9 CY — STA. 6093+50, 94.86' LT
7.3 CY — STA. 6094+00, 4.93' RT
4.9 CY — STA. 6095+50, 91.76' LT
4.9 CY — STA. 6096+75, 93.22' LT
4.9 CY — STA. 6098+00, 96.61' LT
16.6 CY — STA. 6099+00, 2.96' RT
4.9 CY — STA. 6099+25, 97.00' LT
4.9 CY — STA. 6100+50, 102.39' LT
4.9 CY — STA. 6101+75, 108.97' LT
4.9 CY — STA. 6103+00, 116.78' LT

NOTES:

1. SEE SP DITCH BERM DETAIL FOR DITCH BERM DIMENSIONS.

2. IN PHASE 2, REMOVE EXISTING CULVERT, MODIFY INLET OR JUNCTION BOX OPENING TO CONNECT PROPOSED CULVERT AND CONSTRUCT UNDER PHASE 2 ROADWAY.

3. SEE PIPE COVER AND DAYLIGHT DETAILS FOR GRADING INFORMATION.

Scale (Feet)
50 0 50 100

REVISIONS			
NO.	DATE	BY	DESCRIPTION

DESIGNED D. ABEDI
DESIGN CHECKED C. MCALISTER
DETAILED P. CONSALVO
DRAWING CHECKED C. MCALISTER

SCALES SHOWN ARE FOR 11" X 17" PRINTS ONLY
CADD FILE NAME 24149_DrpI_D202B.DGN
DRAWING DATE: November 21, 2025

IDAHO TRANSPORTATION DEPARTMENT
YOUR Safety→YOUR Mobility→YOUR Economic Opportunity
DAVID EVANS AND ASSOCIATES INC.

PROJECT NO. A024(149)

DRAINAGE PLAN
US 20, BONNEVILLE COUNTY
LINE TO MP 291
STA. 6091+00 TO STA. 6103+00
PHASE 2

ENGLISH
COUNTY BINGHAM/BONNEVILLE
KEY NUMBER 24149
SHEET 256 OF 441

NOT APPROVED
INTERMEDIATE
FOR CONSTRUCTION

November 21, 2025 4:50:47 PM
pw://itd-pw.bentley.com:itd-pw-01/Documents/District 6/Projects/prj24394/Project_Development/Plan Sheets/Package 2 (KN 24149)/Drainage/24149_DrpI_D202B

T.3N., R.34E., B.M.

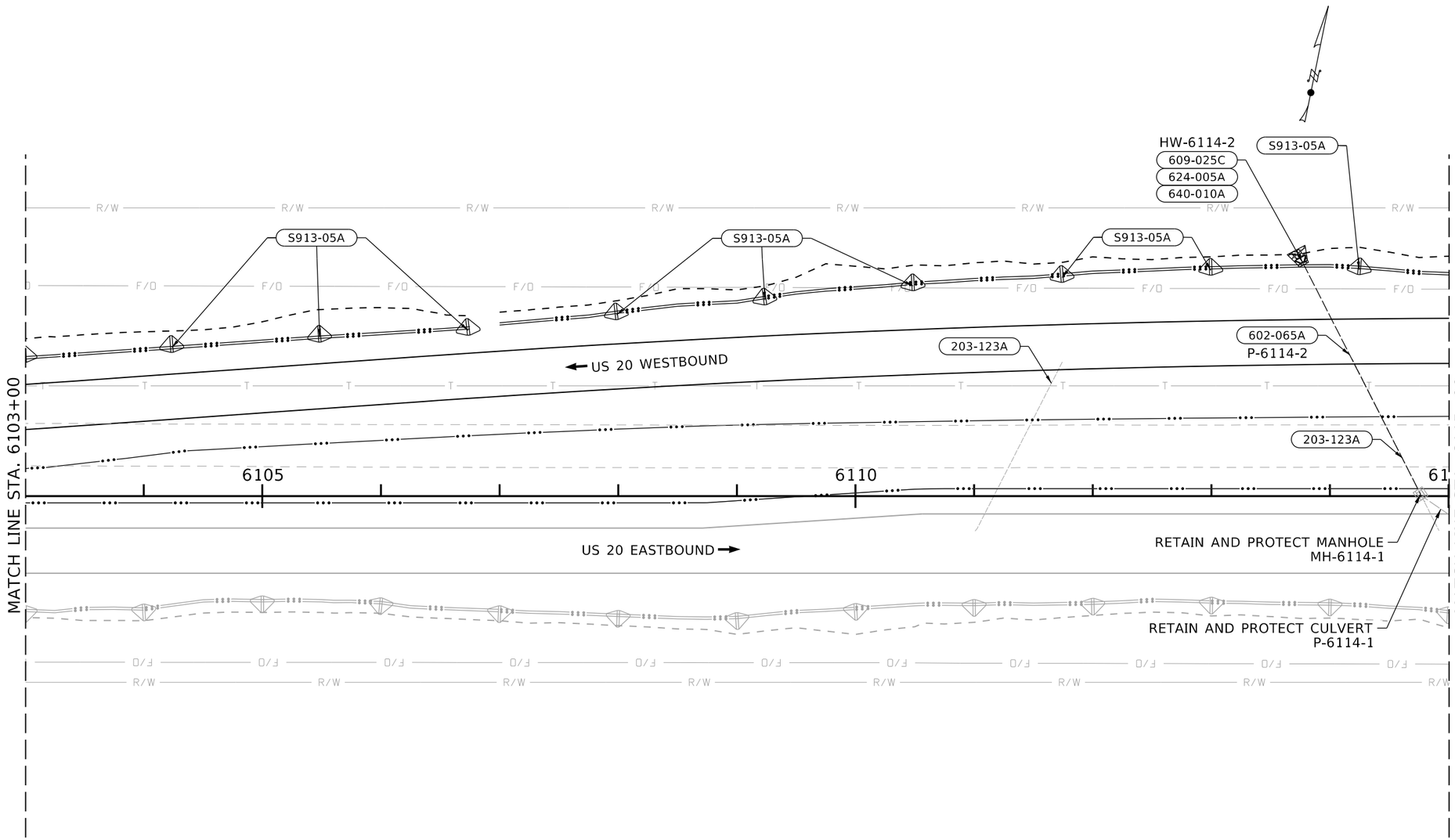

203-123A	**REMOVAL OF MISCELLANEOUS ITEMS (PIPE)**	
135 FT	STA. 6111+13.21, 6.55' RT TO STA. 6111+74.36, 113.15' LT	
135 FT	STA. 6114+18.88, 115.69' LT TO STA. 6114+79.52, 4.66' RT	
602-065A	**36" PIPE CULVERT**	
219 FT	STA. 6114+18.98, 116.37' LT TO STA. 6114+79.49, 4.67' RT	
609-025C	**MINOR STRUCTURES (36" CONCRETE HEADWALL)**	
1 EACH	STA. 6113+79.60, 196.39' LT	
624-005A	**LOOSE RIPRAP (CLASS I)**	
10.4 CY	STA. 6113+79.60, 196.39' LT	
640-010A	**RIPRAP/EROSION CONTROL GEOTEXTILE**	
25 SY	STA. 6113+79.60, 196.39' LT	
S913-05A	**SP DITCH BERM**	
4.9 CY	STA. 6104+25, 125.25' LT	
4.9 CY	STA. 6105+50, 133.90' LT	
4.9 CY	STA. 6106+75, 139.64' LT	
4.9 CY	STA. 6108+00, 152.80' LT	
4.9 CY	STA. 6109+25, 165.28' LT	
4.9 CY	STA. 6110+50, 177.27' LT	
4.9 CY	STA. 6111+75, 184.29' LT	
4.9 CY	STA. 6113+00, 190.33' LT	
4.9 CY	STA. 6114+25, 195.60' LT	

NOTES:

1. SEE SP DITCH BERM DETAIL FOR DITCH BERM DIMENSIONS.

2. IN PHASE 2, REMOVE EXISTING CULVERT, MODIFY INLET OR JUNCTION BOX OPENING TO CONNECT PROPOSED CULVERT AND CONSTRUCT UNDER PHASE 2 ROADWAY.

3. SEE PIPE COVER AND DAYLIGHT DETAILS FOR GRADING INFORMATION.

Scale (Feet)
50 0 50 100

NOT APPROVED
INTERMEDIATE
FOR CONSTRUCTION

REVISIONS			
NO.	DATE	BY	DESCRIPTION

DESIGNED D. ABEDI	SCALES SHOWN ARE FOR 11" X 17" PRINTS ONLY	IDAHO TRANSPORTATION DEPARTMENT YOUR Safety→YOUR Mobility→YOUR Economic Opportunity DAVID EVANS AND ASSOCIATES INC.
DESIGN CHECKED C. MCALISTER		
DETAILED P. CONSALVO	CADD FILE NAME 24149_DrpI_D202B.DGN	
DRAWING CHECKED C. MCALISTER	DRAWING DATE: November 21, 2025	

PROJECT NO.	DRAINAGE PLAN	ENGLISH
A024(149)	US 20, BONNEVILLE COUNTY LINE TO MP 291 STA. 6103+00 TO STA. 6115+00 PHASE 2	COUNTY BINGHAM/BONNEVILLE KEY NUMBER 24149 SHEET 257 OF 441

November 21, 2025 4:50:51 PM
pw://itd-pw.bentley.com:itd-pw-01/Documents/District 6/Projects/prj24394/Project_Development/Plan Sheets/Package 2 (KN 24149)/Drainage/24149_DrpI_D202B

T.3N., R.34E., B.M.

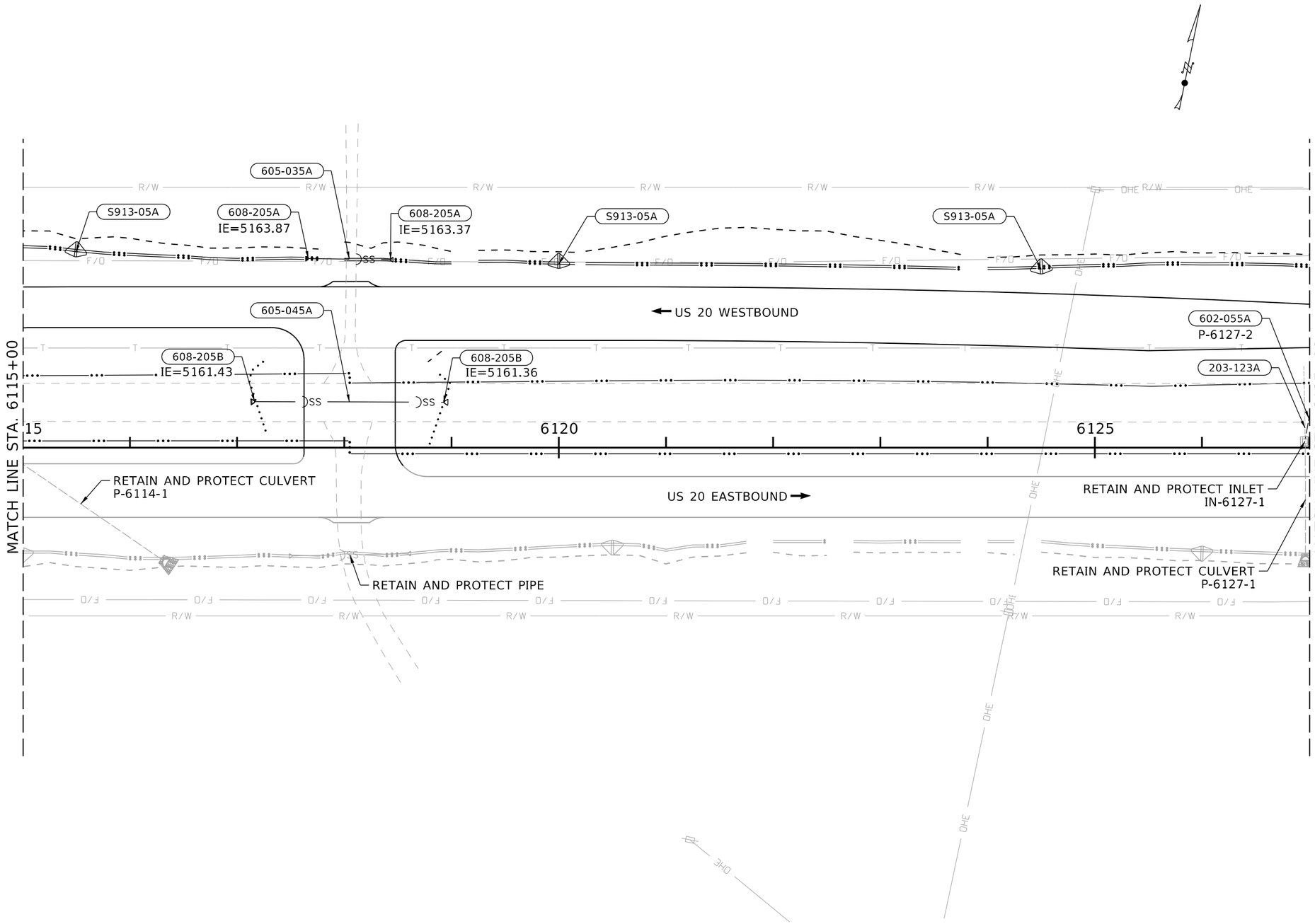

203-123A **REMOVAL OF MISCELLANEOUS ITEMS (PIPE)**
69 FT STA. 6126+94.75, 75.95' LT TO STA. 6126+96.23, 7.95' LT

602-055A **30" PIPE CULVERT**
24 FT STA. 6126+96.07, 5.95' LT TO STA. 6127+00.00, 28.97' LT

605-035A **18" STORM SEWER PIPE**
77 FT STA. 6117+66.43, 176.42' LT TO STA. 6118+43.00, 175.46' LT

605-045A **24" STORM SEWER PIPE**
177 FT STA. 6117+16.28, 42.93' LT TO STA. 6118+93.20, 42.43' LT

608-205A **METAL SAFETY APRON (PARALLEL) (18")**
1 EACH STA. 6117+66.43, 176.42' LT
1 EACH STA. 6118+43.00, 175.46' LT

608-205B **METAL SAFETY APRON (PARALLEL) (24")**
1 EACH STA. 6117+16.28, 42.93' LT
1 EACH STA. 6118+93.20, 42.43' LT

S913-05A **SP DITCH BERM**
4.9 CY STA. 6115+50, 182.14' LT
4.9 CY STA. 6120+00, 171.23' LT
4.9 CY STA. 6124+50, 166.12' LT

NOTES:

1. SEE SP DITCH BERM DETAIL FOR DITCH BERM DIMENSIONS.
2. IN PHASE 2, REMOVE EXISTING CULVERT, MODIFY INLET OR JUNCTION BOX OPENING TO CONNECT PROPOSED CULVERT AND CONSTRUCT UNDER PHASE 2 ROADWAY.
3. SEE PIPE COVER AND DAYLIGHT DETAILS FOR GRADING INFORMATION.

Scale (Feet)
50 0 50 100

REVISIONS			
NO.	DATE	BY	DESCRIPTION

DESIGNED D. ABEDI
DESIGN CHECKED C. MCALISTER
DETAILED P. CONSALVO
DRAWING CHECKED C. MCALISTER

SCALES SHOWN ARE FOR 11" X 17" PRINTS ONLY
CADD FILE NAME 24149_DrpI_D202B.DGN
DRAWING DATE: November 21, 2025

IDAHO TRANSPORTATION DEPARTMENT
YOUR Safety→YOUR Mobility→YOUR Economic Opportunity
DAVID EVANS AND ASSOCIATES INC.

PROJECT NO. A024(149)

DRAINAGE PLAN
US 20, BONNEVILLE COUNTY
LINE TO MP 291
STA. 6115+00 TO STA. 6127+00
PHASE 2

ENGLISH
COUNTY BINGHAM/BONNEVILLE
KEY NUMBER 24149
SHEET 258 OF 441

NOT APPROVED
INTERMEDIATE
FOR CONSTRUCTION

November 21, 2025 4:50:53 PM
pw://itd-pw.bentley.com:itd-pw-01/Documents/District 6/Projects/prj24394/Project_Development/Plan Sheets/Package 2 (KN 24149)/Drainage/24149_DrpI_D202B

T.3N., R.34E., B.M.

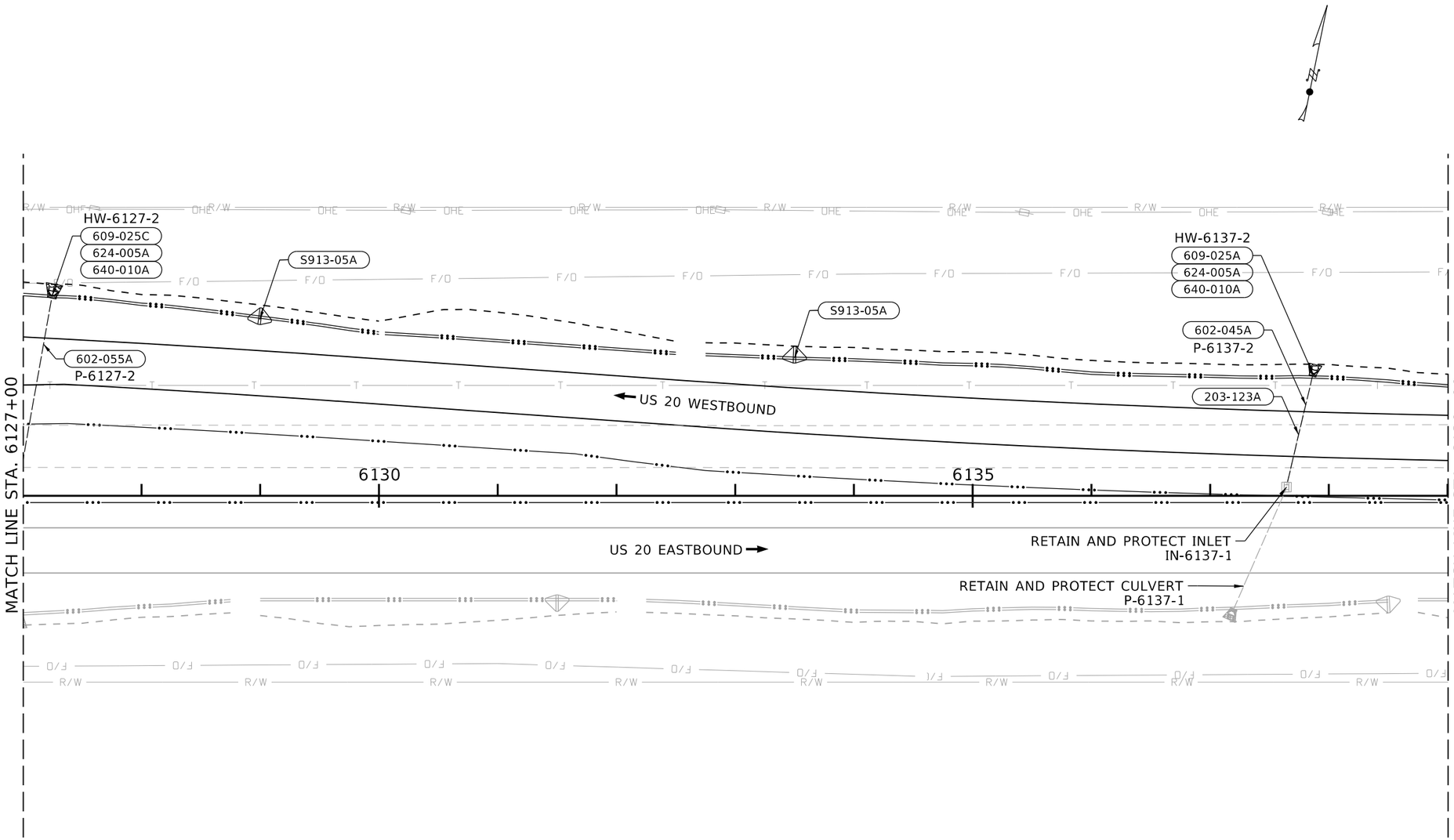

203-123A **REMOVAL OF MISCELLANEOUS ITEMS (PIPE)**
67 FT STA. 6137+64.51, 8.91' LT TO STA. 6137+79.52, 73.28' LT

602-045A **24" PIPE CULVERT**
97 FT STA. 6137+64.32, 7.35' LT TO STA. 6137+86.49, 100.66' LT

602-055A **30" PIPE CULVERT**
140 FT STA. 6127+00.00, 28.97' LT TO STA. 6127+24.77, 168.48' LT

609-025A **MINOR STRUCTURES (24" CONCRETE HEADWALL)**
1 EACH STA. 6137+86.49, 100.66' LT

609-025B **MINOR STRUCTURES (30" CONCRETE HEADWALL)**
1 EACH STA. 6127+24.77, 168.48' LT

624-005A **LOOSE RIPRAP (CLASS I)**
7.3 CY STA. 6127+24.77, 168.48' LT
4.7 CY STA. 6137+86.49, 100.66' LT

640-010A **RIPRAP/EROSION CONTROL GEOTEXTILE**
19 SY STA. 6127+24.77, 168.48' LT
14 SY STA. 6137+86.49, 100.66' LT

S913-05A **SP DITCH BERM**
4.9 CY STA. 6129+00, 148.36' LT
4.9 CY STA. 6133+50, 115.89' LT

NOTES:

1. SEE SP DITCH BERM DETAIL FOR DITCH BERM DIMENSIONS.

2. IN PHASE 2, REMOVE EXISTING CULVERT, MODIFY INLET OR JUNCTION BOX OPENING TO CONNECT PROPOSED CULVERT AND CONSTRUCT UNDER PHASE 2 ROADWAY.

3. SEE PIPE COVER AND DAYLIGHT DETAILS FOR GRADING INFORMATION.

Scale (Feet)
50 0 50 100

NOT APPROVED
INTERMEDIATE
FOR CONSTRUCTION

REVISIONS			
NO.	DATE	BY	DESCRIPTION

DESIGNED D. ABEDI
DESIGN CHECKED C. MCALISTER
DETAILED P. CONSALVO
DRAWING CHECKED C. MCALISTER

SCALES SHOWN ARE FOR 11" X 17" PRINTS ONLY
CADD FILE NAME 24149_DrpI_D202B.DGN
DRAWING DATE: November 21, 2025

IDAHO TRANSPORTATION DEPARTMENT
YOUR Safety→YOUR Mobility→YOUR Economic Opportunity
DAVID EVANS AND ASSOCIATES INC.

PROJECT NO. A024(149)

DRAINAGE PLAN
US 20, BONNEVILLE COUNTY
LINE TO MP 291
STA. 6127+00 TO STA. 6139+00
PHASE 2

ENGLISH
COUNTY BINGHAM/BONNEVILLE
KEY NUMBER 24149
SHEET 259 OF 441

November 21, 2025 4:50:57 PM
pw://itd-pw.bentley.com:itd-pw-01/Documents/District 6/Projects/prj24394/Project_Development/Plan Sheets/Package 2 (KN 24149)/Drainage/24149_DrpI_D202B

T.3N., R.34E., B.M.

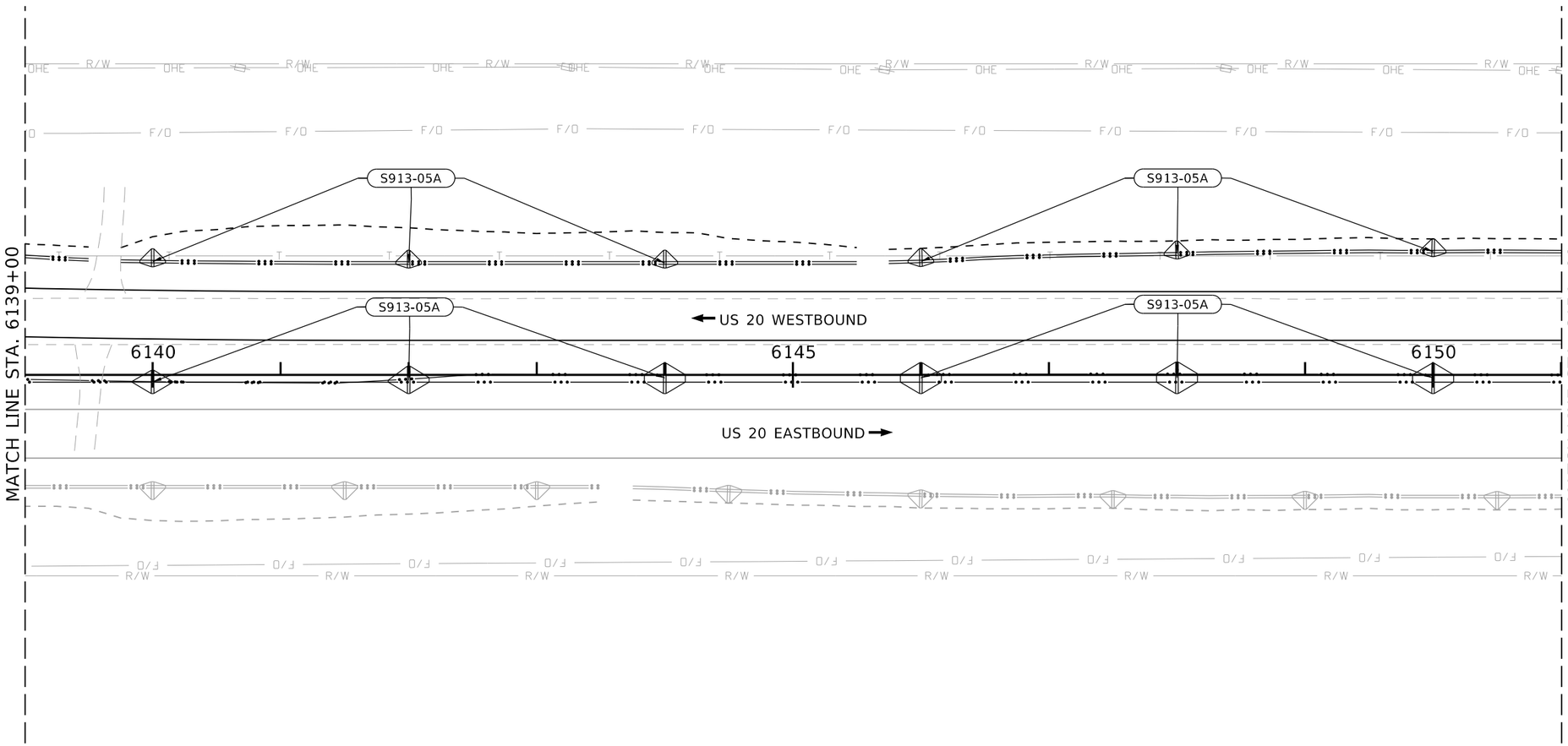

S913-05A	SP DITCH BERM
6.4 CY	STA. 6140+00, 5.43' RT
4.9 CY	STA. 6140+00, 88.51' LT
8.3 CY	STA. 6142+00, 4.46' RT
4.9 CY	STA. 6142+00, 87.45' LT
11.5 CY	STA. 6144+00, 2.32' RT
4.9 CY	STA. 6144+00, 87.45' LT
11.6 CY	STA. 6146+00, 2.32' RT
4.9 CY	STA. 6146+00, 88.68' LT
11.9 CY	STA. 6148+00, 2.32' RT
4.9 CY	STA. 6148+00, 94.56' LT
11.3 CY	STA. 6150+00, 2.32' RT
4.9 CY	STA. 6150+00, 96.35' LT

NOTES:

1. SEE SP DITCH BERM DETAIL FOR DITCH BERM DIMENSIONS.

Scale (Feet)
50 0 50 100

REVISIONS			
NO.	DATE	BY	DESCRIPTION

DESIGNED D. ABEDI
DESIGN CHECKED C. MCALISTER
DETAILED P. CONSALVO
DRAWING CHECKED C. MCALISTER

SCALES SHOWN ARE FOR 11" X 17" PRINTS ONLY
CADD FILE NAME 24149_DrpI_D202B.DGN
DRAWING DATE: November 21, 2025

IDAHO TRANSPORTATION DEPARTMENT
YOUR Safety→YOUR Mobility→YOUR Economic Opportunity
DAVID EVANS AND ASSOCIATES INC.

PROJECT NO.
A024(149)

DRAINAGE PLAN
US 20, BONNEVILLE COUNTY
LINE TO MP 291
STA. 6139+00 TO STA. 6151+00
PHASE 2

ENGLISH
COUNTY BINGHAM/BONNEVILLE
KEY NUMBER 24149
SHEET 260 OF 441

NOT APPROVED
INTERMEDIATE
FOR CONSTRUCTION

November 21, 2025 4:51:01 PM
pw://itd-pw.bentley.com:itd-pw-01/Documents/District 6/Projects/prj24394/Project_Development/Plan Sheets/Package 2 (KN 24149)/Drainage/24149_DrpI_D202B

T.3N., R.34E., B.M.

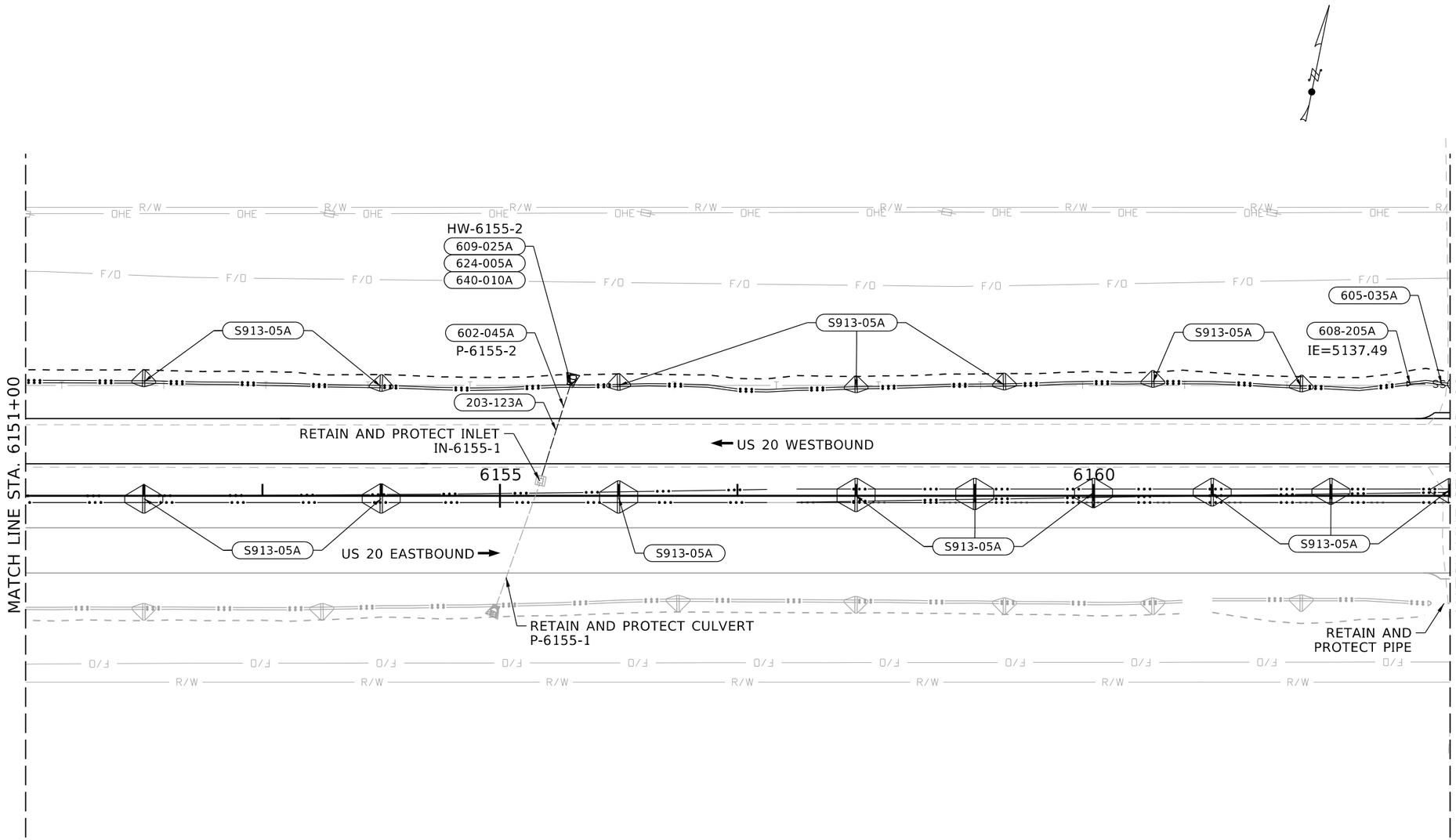

203-123A	**REMOVAL OF MISCELLANEOUS ITEMS (PIPE)**
60 FT	STA. 6155+34.50, 14.25' LT TO STA. 6155+52.28, 71.49' LT
602-045A	**24" PIPE CULVERT**
85 FT	STA. 6155+33.65, 12.56' LT TO STA. 6155+60.58, 97.83' LT
605-035A	**18" STORM SEWER PIPE**
34 FT	STA. 6162+66.59, 94.24' LT TO STA. 6163+00.00, 94.14' LT
608-205A	**METAL SAFETY APRON (PARALLEL) (18")**
1 EACH	STA. 6162+85.20, 91.92' LT
609-025A	**MINOR STRUCTURES (24" CONCRETE HEADWALL)**
1 EACH	STA. 6155+60.57, 97.83' LT
624-005A	**LOOSE RIPRAP (CLASS I)**
4.7 CY	STA. 6155+60.57, 97.83' LT
640-010A	**RIPRAP/EROSION CONTROL GEOTEXTILE**
14 SY	STA. 6155+60.57, 97.83' LT
S913-05A	**SP DITCH BERM**
4.9 CY	STA. 6152+00, 95.93' LT
12.3 CY	STA. 6154+00, 2.32' RT
4.9 CY	STA. 6154+00, 91.99' LT
14.4 CY	STA. 6156+00, 1.14' RT
4.9 CY	STA. 6156+00, 92.92' LT
15.7 CY	STA. 6158+00, 0.52' RT
4.9 CY	STA. 6158+00, 91.04' LT
14.1 CY	STA. 6159+00, 1.34' RT
4.9 CY	STA. 6159+25, 93.28' LT
12.6 CY	STA. 6160+00, 2.16 RT
11.2 CY	STA. 6161+00, 2.90' RT
4.9 CY	STA. 6160+50, 95.45' LT
4.9 CY	STA. 6161+75, 91.59' LT
9.9 CY	STA. 6162+00, 3.61' RT
8.6 CY	STA. 6163+00, 4.27' RT
4.9 CY	STA. 6163+00, 3.61' LT

NOTES:

1. SEE SP DITCH BERM DETAIL FOR DITCH BERM DIMENSIONS.

2. IN PHASE 2, REMOVE EXISTING CULVERT, MODIFY INLET OR JUNCTION BOX OPENING TO CONNECT PROPOSED CULVERT AND CONSTRUCT UNDER PHASE 2 ROADWAY.

3. SEE PIPE COVER AND DAYLIGHT DETAILS FOR GRADING INFORMATION.

Scale (Feet)
50 0 50 100

REVISIONS			
NO.	DATE	BY	DESCRIPTION

DESIGNED D. ABEDI	SCALES SHOWN ARE FOR 11" X 17" PRINTS ONLY
DESIGN CHECKED C. MCALISTER	
DETAILED P. CONSALVO	CADD FILE NAME 24149_DrpI_D202B.DGN
DRAWING CHECKED C. MCALISTER	DRAWING DATE: November 21, 2025

IDAHO TRANSPORTATION DEPARTMENT
YOUR Safety→YOUR Mobility→YOUR Economic Opportunity
DAVID EVANS AND ASSOCIATES INC.

PROJECT NO.
A024(149)

DRAINAGE PLAN
US 20, BONNEVILLE COUNTY
LINE TO MP 291
STA. 6151+00 TO STA. 6163+00
PHASE 2

ENGLISH

COUNTY BINGHAM/BONNEVILLE

KEY NUMBER 24149

SHEET 261 OF 441

NOT APPROVED
INTERMEDIATE
FOR CONSTRUCTION

November 21, 2025 4:51:05 PM
pw://itd-pw.bentley.com:itd-pw-01/Documents/District 6/Projects/prj24394/Project_Development/Plan Sheets/Package 2 (KN 24149)/Drainage/24149_DrpI_D202B

T.3N., R.34E., B.M.

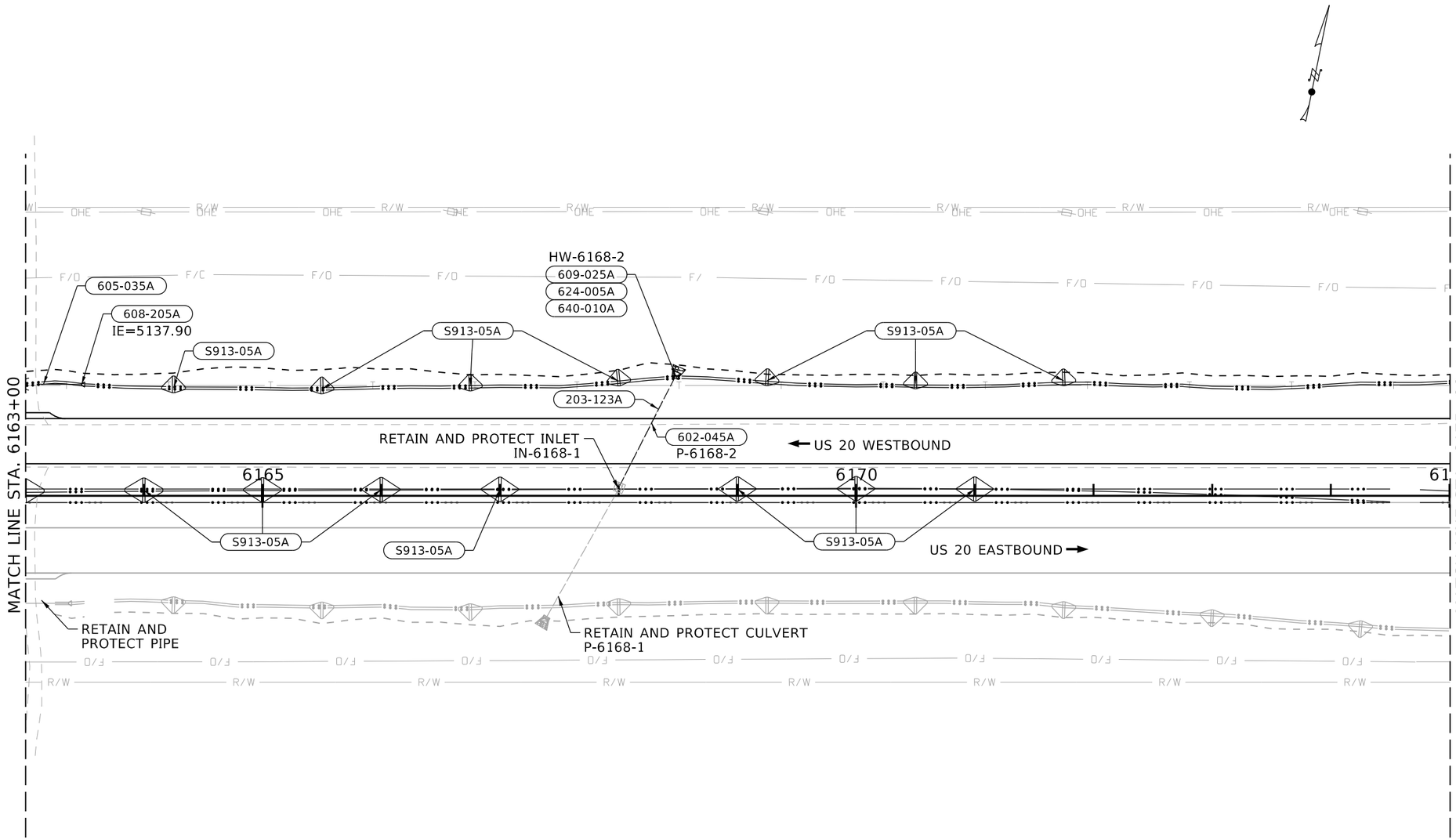

203-123A **REMOVAL OF MISCELLANEOUS ITEMS (PIPE)**
81 FT STA. 6168+00.86, 8.54' LT TO STA. 6168+36.76, 80.29' LT

602-045A **24" PIPE CULVERT**
104 FT STA. 6168+00.01, 6.79' LT TO STA. 6168+48.01, 101.03' LT

605-035A **18" STORM SEWER PIPE**
48 FT STA. 6163+00.00, 94.14' LT TO STA. 6163+47.98, 93.78' LT

608-205A **METAL SAFETY APRON (PARALLEL) (18")**
1 EACH STA. 6163+15.19, 90.35' LT

609-025A **MINOR STRUCTURES (24" CONCRETE HEADWALL)**
1 EACH STA. 6168+48.01, 101.03' LT

624-005A **LOOSE RIPRAP (CLASS I)**
4.7 CY STA. 6168+48.01, 101.03' LT

640-010A **RIPRAP/EROSION CONTROL GEOTEXTILE**
14 SY STA. 6168+48.01, 101.03' LT

S913-05A **SP DITCH BERM**
7.7 CY STA. 6164+00, 4.76' RT
4.9 CY STA. 6164+25, 90.82' LT
7.2 CY STA. 6165+00, 5.02' RT
4.9 CY STA. 6165+50, 89.95' LT
6.8 CY STA. 6166+00, 5.22' RT
4.9 CY STA. 6166+75, 92.38' LT
6.5 CY STA. 6167+00, 5.66' RT
4.9 CY STA. 6168+00, 96.59' LT
6.2 CY STA. 6169+00, 5.78' RT
4.9 CY STA. 6169+25, 96.91' LT
6.6 CY STA. 6170+00, 5.96' RT
4.9 CY STA. 6170+50, 94.16' LT
6.0 CY STA. 6171+00, 5.73' RT
4.9 CY STA. 6171+75, 96.81' LT

NOTES:

1. SEE SP DITCH BERM DETAIL FOR DITCH BERM DIMENSIONS.

2. IN PHASE 2, REMOVE EXISTING CULVERT, MODIFY INLET OR JUNCTION BOX OPENING TO CONNECT PROPOSED CULVERT AND CONSTRUCT UNDER PHASE 2 ROADWAY.

3. SEE PIPE COVER AND DAYLIGHT DETAILS FOR GRADING INFORMATION.

Scale (Feet)
50 0 50 100

REVISIONS			
NO.	DATE	BY	DESCRIPTION

DESIGNED D. ABEDI
DESIGN CHECKED C. MCALISTER
DETAILED P. CONSALVO
DRAWING CHECKED C. MCALISTER

SCALES SHOWN ARE FOR 11" X 17" PRINTS ONLY
CADD FILE NAME 24149_DrpI_D202B.DGN
DRAWING DATE: November 21, 2025

IDAHO TRANSPORTATION DEPARTMENT
YOUR Safety→YOUR Mobility→YOUR Economic Opportunity
DAVID EVANS AND ASSOCIATES INC.

PROJECT NO. A024(149)

DRAINAGE PLAN
US 20, BONNEVILLE COUNTY
LINE TO MP 291
STA. 6163+00 TO STA. 6175+00
PHASE 2

ENGLISH
COUNTY BINGHAM/BONNEVILLE
KEY NUMBER 24149
SHEET 262 OF 441

NOT APPROVED
INTERMEDIATE
FOR CONSTRUCTION

November 21, 2025 4:51:09 PM
pw://itd-pw.bentley.com:itd-pw-01/Documents/District 6/Projects/prj24394/Project_Development/Plan Sheets/Package 2 (KN 24149)/Drainage/24149_DrpI_D202B

T.3N., R.34E., B.M.

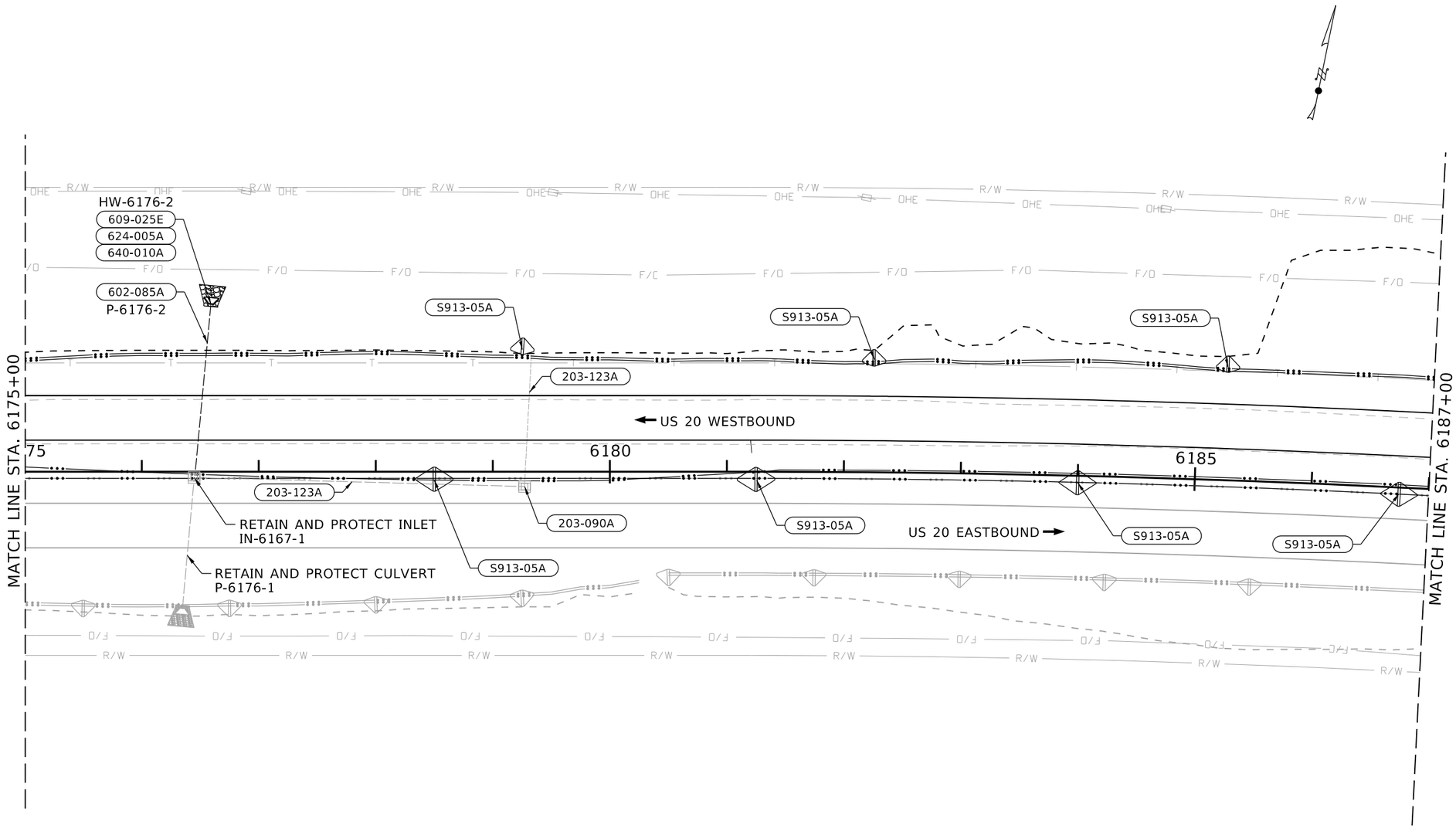

203-123A **REMOVAL OF MISCELLANEOUS ITEMS (PIPE)**
113 FT STA. 6179+27.03, 12.72' LT TO STA. 6179+33.02, 99.51' LT
280 FT STA. 6176+44.76, 4.92' RT TO STA. 6179+27.03, 12.65' RT

203-090A **REMOVAL OF INLET**
1 EACH STA. 6179+27.03, 12.65' RT

602-085A **48" PIPE CULVERT**
148 FT STA. 6176+45.13, 4.99' RT TO STA. 6176+59.63, 147.49' LT

609-025E **MINOR STRUCTURES (48" CONCRETE HEADWALL)**
1 EACH STA. 6176+59.63, 147.49' LT

624-005A **LOOSE RIPRAP (CLASS I)**
18.5 CY STA. 6176+59.63, 147.49' LT

640-010A **RIPRAP/EROSION CONTROL GEOTEXTILE**
40 SY STA. 6176+59.63, 147.49' LT

S913-05A **SP DITCH BERM**
7.4 CY STA. 6178+50, 6.36' RT
4.9 CY STA. 6179+25, 104.61' LT
7.7 CY STA. 6181+25, 6.56' RT
4.9 CY STA. 6182+25, 94.84' LT
6.6 CY STA. 6184+00, 5.92' RT
4.9 CY STA. 6185+25, 96.19' LT
6.6 CY STA. 6186+75, 5.82' RT

NOTES:

1. SEE SP DITCH BERM DETAIL FOR DITCH BERM DIMENSIONS.

2. IN PHASE 2, REMOVE EXISTING CULVERT, MODIFY INLET OR JUNCTION BOX OPENING TO CONNECT PROPOSED CULVERT AND CONSTRUCT UNDER PHASE 2 ROADWAY.

3. SEE PIPE COVER AND DAYLIGHT DETAILS FOR GRADING INFORMATION.

Scale (Feet)
50 0 50 100

REVISIONS			
NO.	DATE	BY	DESCRIPTION

DESIGNED D. ABEDI
DESIGN CHECKED C. MCALISTER
DETAILED P. CONSALVO
DRAWING CHECKED C. MCALISTER

SCALES SHOWN ARE FOR 11" X 17" PRINTS ONLY
CADD FILE NAME 24149_DrpI_D202C.DGN
DRAWING DATE: November 21, 2025

IDAHO TRANSPORTATION DEPARTMENT
YOUR Safety→YOUR Mobility→YOUR Economic Opportunity
DAVID EVANS AND ASSOCIATES INC.

PROJECT NO. A024(149)

DRAINAGE PLAN
US 20, BONNEVILLE COUNTY LINE TO MP 291
STA. 6175+00 TO STA. 6187+00
PHASE 2

ENGLISH
COUNTY BINGHAM/BONNEVILLE
KEY NUMBER 24149
SHEET 263 OF 441

NOT APPROVED FOR CONSTRUCTION
INTERMEDIATE

November 21, 2025 4:51:26 PM
pw://itd-pw.bentley.com:itd-pw-01/Documents/District 6/Projects/prj24394/Project_Development/Plan Sheets/Package 2 (KN 24149)/Drainage/24149_DrpI_D202C

T.3N., R.34E., B.M.

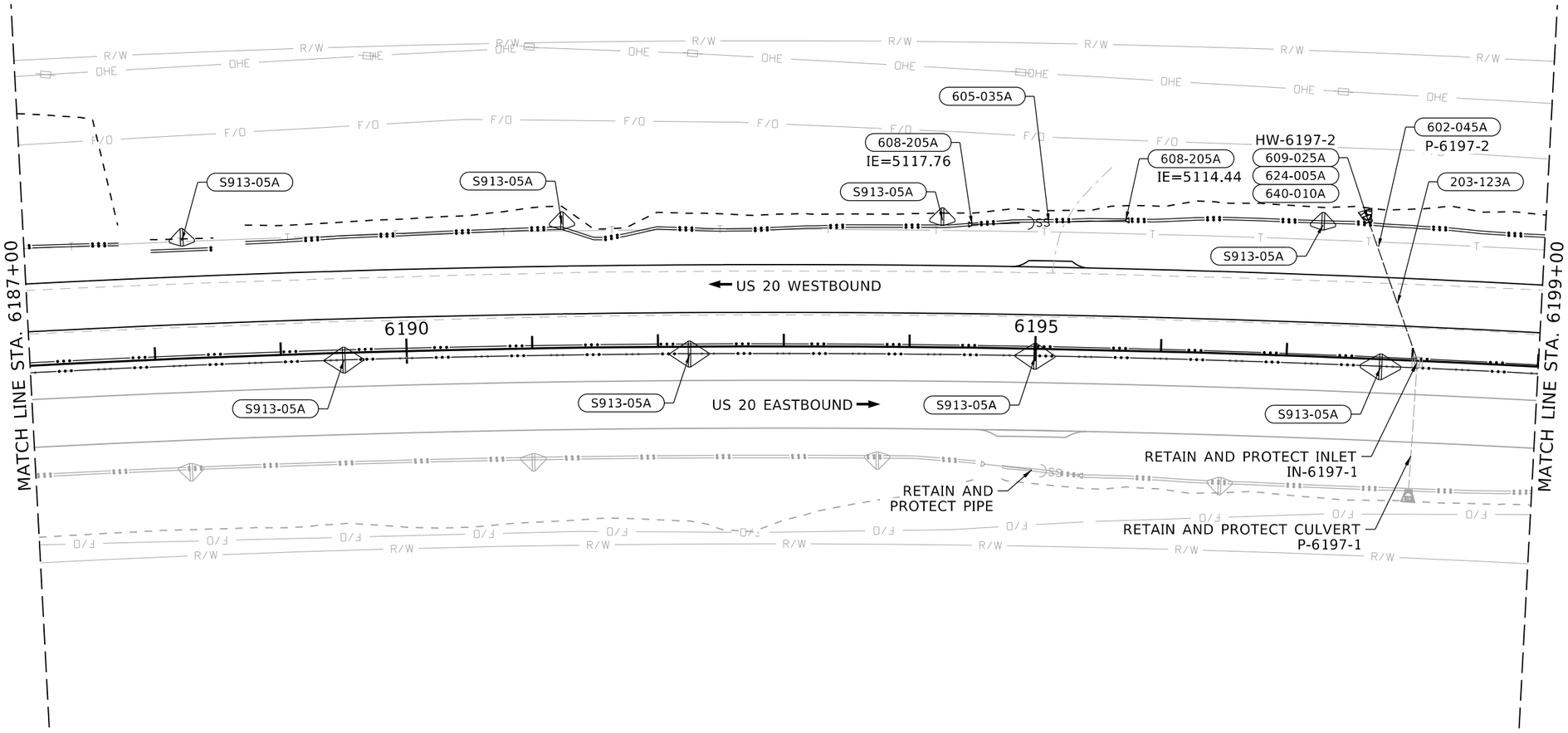

203-123A **REMOVAL OF MISCELLANEOUS ITEMS (PIPE)**
71 FT — STA. 6197+73.30, 77.50' LT TO STA. 6198+00.21, 11.82' LT

602-045A **24" PIPE CULVERT**
119 FT — STA. 6197+59.91, 117.97' LT TO STA. 6197+98.80, 1.40' RT

605-035A **18" STORM SEWER PIPE**
123 FT — STA. 6194.+48.27, 98.01' LT TO STA. 6195+69.55, 103.57' LT

608-205A **METAL SAFETY APRON (PARALLEL) (18")**
1 EACH — STA. 6195+00.69, 98.14' LT
1 EACH — STA. 6195+69.55, 103.57' LT

609-025A **MINOR STRUCTURES (24" CONCRETE HEADWALL)**
1 EACH — STA. 6197+59.90, 117.97' LT

624-005A **LOOSE RIPRAP (CLASS I)**
4.7 CY — STA. 6197+59.90, 117.97' LT

640-010A **RIPRAP/EROSION CONTROL GEOTEXTILE**
14 SY — STA. 6197+59.90, 117.97' LT

S913-05A **SP DITCH BERM**
4.9 CY — STA. 6188+25, 93.39' LT
6.3 CY — STA. 6189+50, 5.81' RT
4.9 CY — STA. 6191+25, 98.23' LT
6.5 CY — STA. 6192+25, 5.92' RT
4.9 CY — STA. 6194+25, 100.88' LT
6.7 CY — STA. 6195+00, 6.06' RT
4.9 CY — STA. 6197+25, 104.73' LT
7.0 CY — STA. 6197+75, 6.19' RT

NOTES:

1. SEE SP DITCH BERM DETAIL FOR DITCH BERM DIMENSIONS.

2. IN PHASE 2, REMOVE EXISTING CULVERT, MODIFY INLET OR JUNCTION BOX OPENING TO CONNECT PROPOSED CULVERT AND CONSTRUCT UNDER PHASE 2 ROADWAY.

3. SEE PIPE COVER AND DAYLIGHT DETAILS FOR GRADING INFORMATION.

Scale (Feet)
50 0 50 100

REVISIONS			
NO.	DATE	BY	DESCRIPTION

DESIGNED D. ABEDI
DESIGN CHECKED C. MCALISTER
DETAILED P. CONSALVO
DRAWING CHECKED C. MCALISTER

SCALES SHOWN ARE FOR 11" X 17" PRINTS ONLY
CADD FILE NAME 24149_Drpl_D202C.DGN
DRAWING DATE: November 21, 2025

IDAHO TRANSPORTATION DEPARTMENT
YOUR Safety→YOUR Mobility→YOUR Economic Opportunity
DAVID EVANS AND ASSOCIATES INC.

PROJECT NO. A024(149)

DRAINAGE PLAN
US 20, BONNEVILLE COUNTY
LINE TO MP 291
STA. 6187+00 TO STA. 6199+00
PHASE 2

ENGLISH
COUNTY BINGHAM/BONNEVILLE
KEY NUMBER 24149
SHEET 264 OF 441

NOT APPROVED
INTERMEDIATE
FOR CONSTRUCTION

November 21, 2025 4:51:29 PM
pw://itd-pw.bentley.com:itd-pw-01/Documents/District 6/Projects/prj24394/Project_Development/Plan Sheets/Package 2 (KN 24149)/Drainage/24149_Drpl_D202C

T.3N., R.34E., B.M.

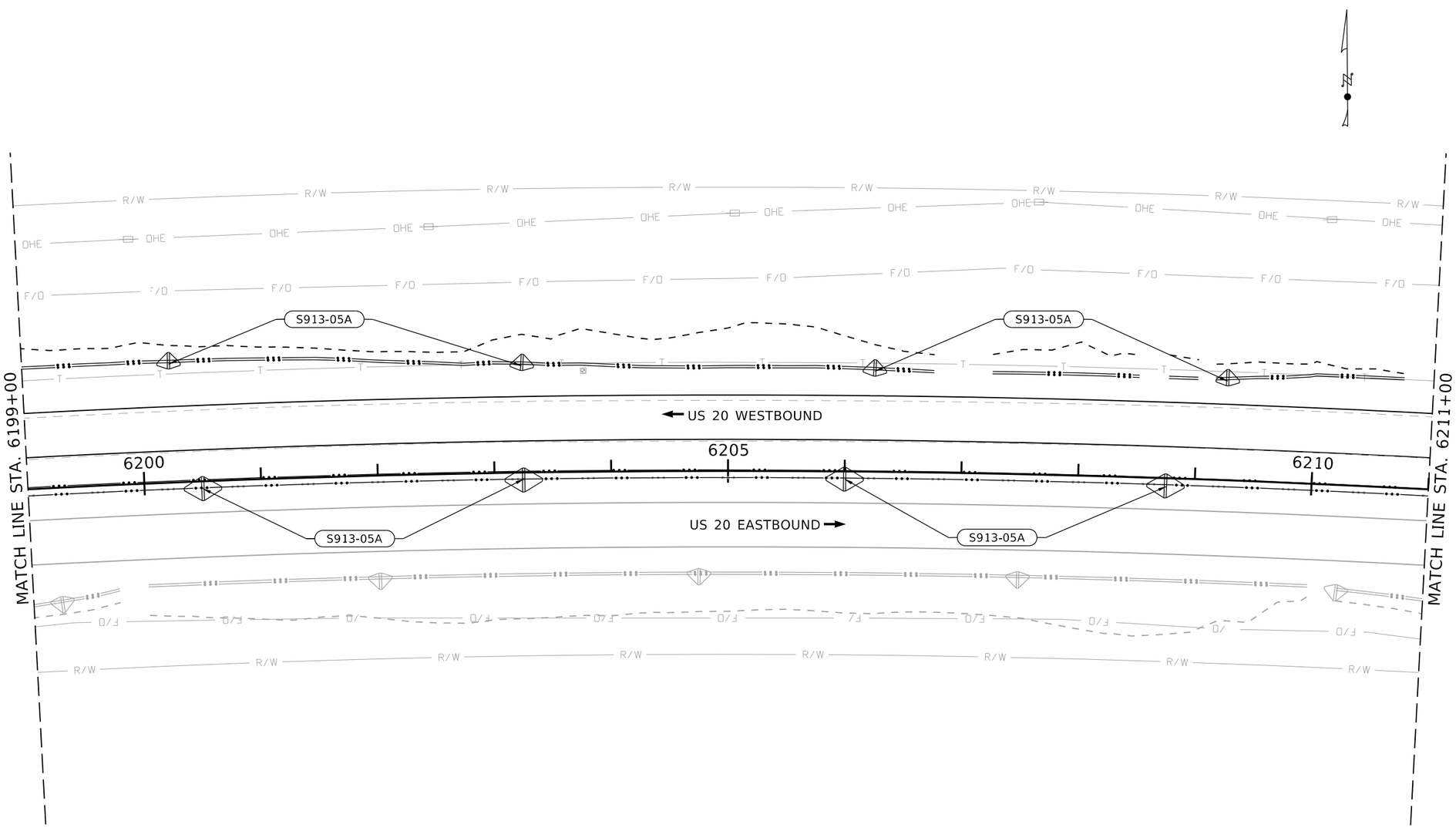

S913-05A	SP DITCH BERM
4.9 CY	STA. 6200+25, 101.31' LT
7.2 CY	STA. 6200+50, 6.62' RT
7.5 CY	STA. 6203+25, 6.46' RT
4.9 CY	STA. 6203+25, 91.30' LT
7.7 CY	STA. 6206+00, 6.59' RT
4.9 CY	STA. 6206+25, 85.89' LT
8.0 CY	STA. 6208+75, 6.70' RT
4.9 CY	STA. 6209+25, 84.79' LT

NOTES:

1. SEE SP DITCH BERM DETAIL FOR DITCH BERM DIMENSIONS.

Scale (Feet)
50 0 50 100

REVISIONS			
NO.	DATE	BY	DESCRIPTION

DESIGNED D. ABEDI
DESIGN CHECKED C. MCALISTER
DETAILED P. CONSALVO
DRAWING CHECKED C. MCALISTER

SCALES SHOWN ARE FOR 11" X 17" PRINTS ONLY
CADD FILE NAME 24149_DrpI_D202C.DGN
DRAWING DATE: November 21, 2025

IDAHO TRANSPORTATION DEPARTMENT
YOUR Safety→YOUR Mobility→YOUR Economic Opportunity
DAVID EVANS AND ASSOCIATES INC.

PROJECT NO.
A024(149)

DRAINAGE PLAN
US 20, BONNEVILLE COUNTY
LINE TO MP 291
STA. 6199+00 TO STA. 6211+00
PHASE 2

ENGLISH
COUNTY BINGHAM/BONNEVILLE
KEY NUMBER 24149
SHEET 265 OF 441

NOT APPROVED
INTERMEDIATE
FOR CONSTRUCTION

November 21, 2025 4:51:32 PM
pw://itd-pw.bentley.com:itd-pw-01/Documents/District 6/Projects/prj24394/Project_Development/Plan Sheets/Package 2 (KN 24149)/Drainage/24149_DrpI_D202C

T.3N., R.34E., B.M.

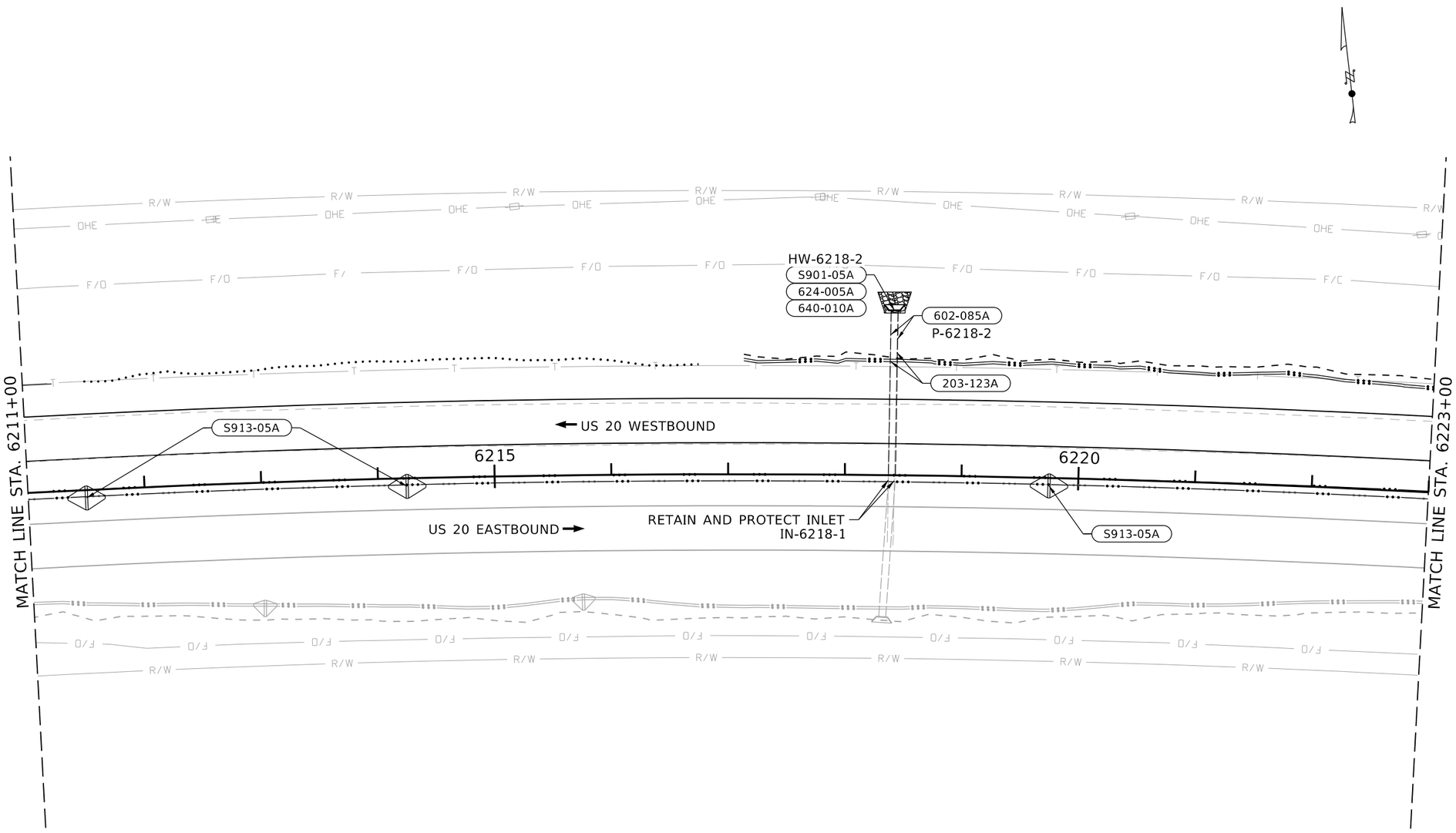

203-123A	**REMOVAL OF MISCELLANEOUS ITEMS (PIPE)**
145 FT	STA. 6218+37.30, 4.21' RT TO STA. 6218+38.02, 141.44' LT
145 FT	STA. 6218+42.41, 4.09' RT TO STA. 6218+43.59, 141.17' LT
602-085A	**48" PIPE CULVERT**
145 FT	STA. 6218+37.28, 4.21' RT TO STA. 6218+37.95, 141.44' LT
144 FT	STA. 6218+43.29, 4.07' RT TO STA. 6218+43.35, 141.54' LT
624-005A	**LOOSE RIPRAP (CLASS I)**
25.2 CY	STA. 6218+40.66, 141.48' LT
640-010A	**RIPRAP/ EROSION CONTROL GEOTEXTILE**
52 SY	STA. 6218+40.66, 141.48' LT
S901-05A	**SP MINOR STRUCTURES (DUAL 48" CONCRETE HEADWALL)**
1 EACH	STA. 6218+40.66, 141.48' LT
S913-05A	**SP DITCH BERM**
8.2 CY	STA. 6211+50, 6.84' RT
8.5 CY	STA. 6214+25, 6.97' RT
8.3 CY	STA. 6219+75, 6.88' RT

NOTES:

1. SEE SP DITCH BERM DETAIL FOR DITCH BERM DIMENSIONS.
2. IN PHASE 2, REMOVE EXISTING CULVERT, MODIFY INLET OR JUNCTION BOX OPENING TO CONNECT PROPOSED CULVERT AND CONSTRUCT UNDER PHASE 2 ROADWAY.
3. SEE PIPE COVER AND DAYLIGHT DETAILS FOR GRADING INFORMATION.

Scale (Feet)
50 0 50 100

REVISIONS			
NO.	DATE	BY	DESCRIPTION

DESIGNED D. ABEDI	SCALES SHOWN ARE FOR 11" X 17" PRINTS ONLY
DESIGN CHECKED C. MCALISTER	
DETAILED P. CONSALVO	CADD FILE NAME 24149_Drpl_D202C.DGN
DRAWING CHECKED C. MCALISTER	DRAWING DATE: November 21, 2025

IDAHO TRANSPORTATION DEPARTMENT
YOUR Safety→YOUR Mobility→YOUR Economic Opportunity
DAVID EVANS AND ASSOCIATES INC.

PROJECT NO.	DRAINAGE PLAN	ENGLISH
A024(149)	US 20, BONNEVILLE COUNTY LINE TO MP 291 STA. 6211+00 TO STA. 6223+00 PHASE 2	COUNTY BINGHAM/BONNEVILLE KEY NUMBER 24149 SHEET 266 OF 441

NOT APPROVED
INTERMEDIATE
FOR CONSTRUCTION

November 21, 2025 4:51:34 PM
pw://itd-pw.bentley.com:itd-pw-01/Documents/District 6/Projects/prj24394/Project_Development/Plan Sheets/Package 2 (KN 24149)/Drainage/24149_Drpl_D202C

T.3N., R.34E., B.M.

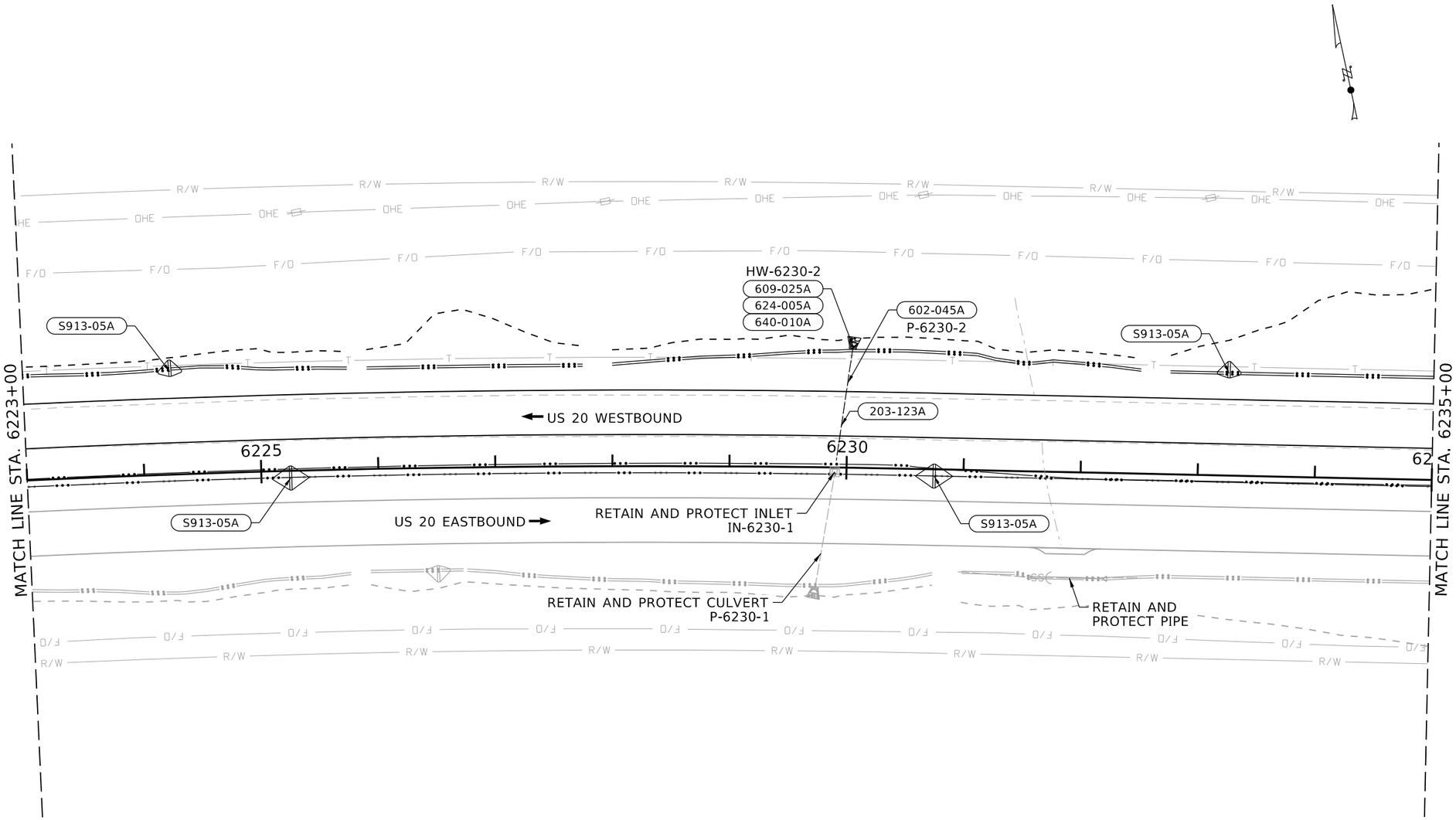

203-123A **REMOVAL OF MISCELLANEOUS ITEMS (PIPE)**
74 FT — STA. 6229+91.17, 6.07' LT TO STA. 6230+00.89, 101.64' LT

602-045A **24" PIPE CULVERT**
99 FT — STA. 6229+89.93, 3.65' RT TO STA. 6230+03.85, 101.64' LT

609-025A **MINOR STRUCTURES (24" CONCRETE HEADWALL)**
1 EACH — STA. 6230+08.06, 134.98' LT

624-005A **LOOSE RIPRAP (CLASS I)**
4.7 CY — STA. 6230+08.06, 134.98' LT

640-010A **RIPRAP/EROSION CONTROL GEOTEXTILE**
14 SY — STA. 6230+08.06, 134.98' LT

S913-05A **SP DITCH BERM**
4.9 CY — STA. 6224+25, 87.71' LT
6.9 CY — STA. 6225+25, 6.16' RT
6.0 CY — STA. 6230+75, 5.79' RT
4.9 CY — STA. 6233+25, 87.45' LT

NOTES:

1. SEE SP DITCH BERM DETAIL FOR DITCH BERM DIMENSIONS.

2. IN PHASE 2, REMOVE EXISTING CULVERT, MODIFY INLET OR JUNCTION BOX OPENING TO CONNECT PROPOSED CULVERT AND CONSTRUCT UNDER PHASE 2 ROADWAY.

3. SEE PIPE COVER AND DAYLIGHT DETAILS FOR GRADING INFORMATION.

Scale (Feet)
50 0 50 100

REVISIONS			
NO.	DATE	BY	DESCRIPTION

DESIGNED D. ABEDI
DESIGN CHECKED C. MCALISTER
DETAILED P. CONSALVO
DRAWING CHECKED C. MCALISTER

SCALES SHOWN ARE FOR 11" X 17" PRINTS ONLY
CADD FILE NAME 24149_DrpI_D202C.DGN
DRAWING DATE: November 21, 2025

IDAHO TRANSPORTATION DEPARTMENT
YOUR Safety→YOUR Mobility→YOUR Economic Opportunity
DAVID EVANS AND ASSOCIATES INC.

PROJECT NO.
A024(149)

DRAINAGE PLAN
US 20, BONNEVILLE COUNTY
LINE TO MP 291
STA. 6223+00 TO STA. 6235+00
PHASE 2

ENGLISH
COUNTY BINGHAM/BONNEVILLE
KEY NUMBER 24149
SHEET 267 OF 441

NOT APPROVED
INTERMEDIATE
FOR CONSTRUCTION

November 21, 2025 4:51:36 PM
pw://itd-pw.bentley.com:itd-pw-01/Documents/District 6/Projects/prj24394/Project_Development/Plan Sheets/Package 2 (KN 24149)/Drainage/24149_DrpI_D202C

T.3N., R.34E., B.M.

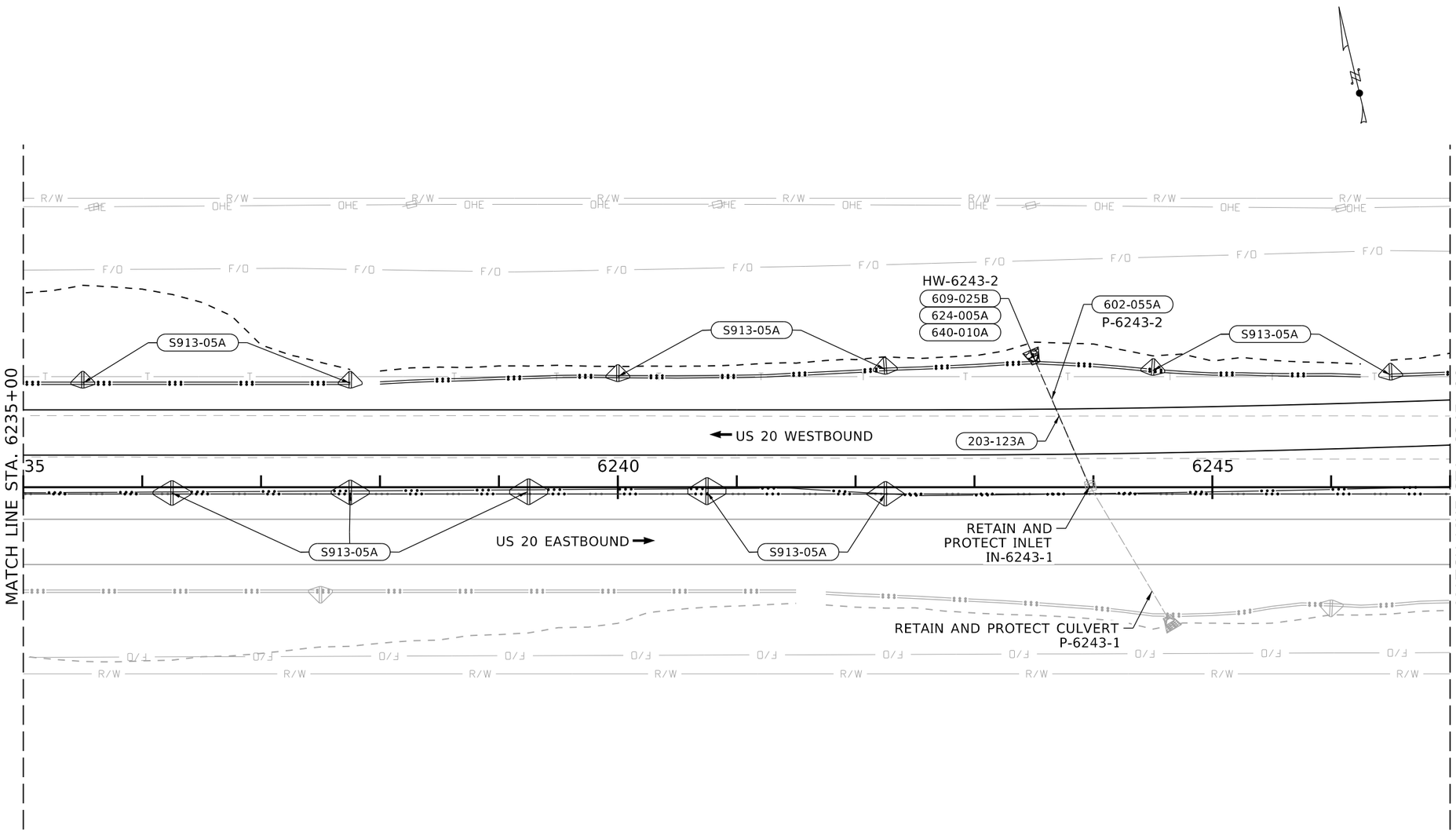

203-123A	**REMOVAL OF MISCELLANEOUS ITEMS (PIPE)**
91 FT	STA. 6243+61.04, 83.54' LT TO STA. 6243+97.32, 0.72' LT
602-055A	**30" PIPE CULVERT**
116 FT	STA. 6243+37.29, 137.37' LT TO STA. 6243+97.53, 1.14' LT
609-025B	**MINOR STRUCTURES (30" CONCRETE HEADWALL)**
1 EACH	STA. 6243+37.29, 137.37' LT
624-005A	**LOOSE RIPRAP (CLASS I)**
7.3 CY	STA. 6243+37.29, 137.37' LT
640-010A	**RIPRAP/EROSION CONTROL GEOTEXTILE**
19 SY	STA. 6243+37.29, 137.37' LT
S913-05A	**SP DITCH BERM**
4.9 CY	STA. 6235+50, 87.45' LT
7.6 CY	STA. 6236+25, 4.88' RT
8.4 CY	STA. 6237+75, 4.38' RT
4.9 CY	STA. 6237+75, 87.45' LT
9.3 CY	STA. 6239+25, 3.91' RT
4.9 CY	STA. 6240+00, 92.98' LT
10.2 CY	STA. 6240+75, 3.47' RT
6.0 CY	STA. 6242+25, 5.66' RT
4.9 CY	STA. 6242+25, 99.10' LT
4.9 CY	STA. 6244+50, 98.10' LT
4.9 CY	STA. 6246+50, 94.17' LT

NOTES:

1. SEE SP DITCH BERM DETAIL FOR DITCH BERM DIMENSIONS.
2. IN PHASE 2, REMOVE EXISTING CULVERT, MODIFY INLET OR JUNCTION BOX OPENING TO CONNECT PROPOSED CULVERT AND CONSTRUCT UNDER PHASE 2 ROADWAY.
3. SEE PIPE COVER AND DAYLIGHT DETAILS FOR GRADING INFORMATION.

Scale (Feet)
50 0 50 100

REVISIONS			
NO.	DATE	BY	DESCRIPTION

DESIGNED D. ABEDI	SCALES SHOWN ARE FOR 11" X 17" PRINTS ONLY
DESIGN CHECKED C. MCALISTER	
DETAILED P. CONSALVO	CADD FILE NAME 24149_DrpI_D202C.DGN
DRAWING CHECKED C. MCALISTER	DRAWING DATE: November 21, 2025

IDAHO TRANSPORTATION DEPARTMENT
YOUR Safety→YOUR Mobility→YOUR Economic Opportunity
DAVID EVANS AND ASSOCIATES INC.

PROJECT NO.	DRAINAGE PLAN
A024(149)	US 20, BONNEVILLE COUNTY LINE TO MP 291 STA. 6235+00 TO STA. 6247+00 PHASE 2

ENGLISH

COUNTY BINGHAM/BONNEVILLE

KEY NUMBER 24149

SHEET 268 OF 441

NOT APPROVED FOR CONSTRUCTION
INTERMEDIATE

November 21, 2025 4:51:39 PM
pw://itd-pw.bentley.com:itd-pw-01/Documents/District 6/Projects/prj24394/Project_Development/Plan Sheets/Package 2 (KN 24149)/Drainage/24149_DrpI_D202C

T.3N., R.34E., B.M.

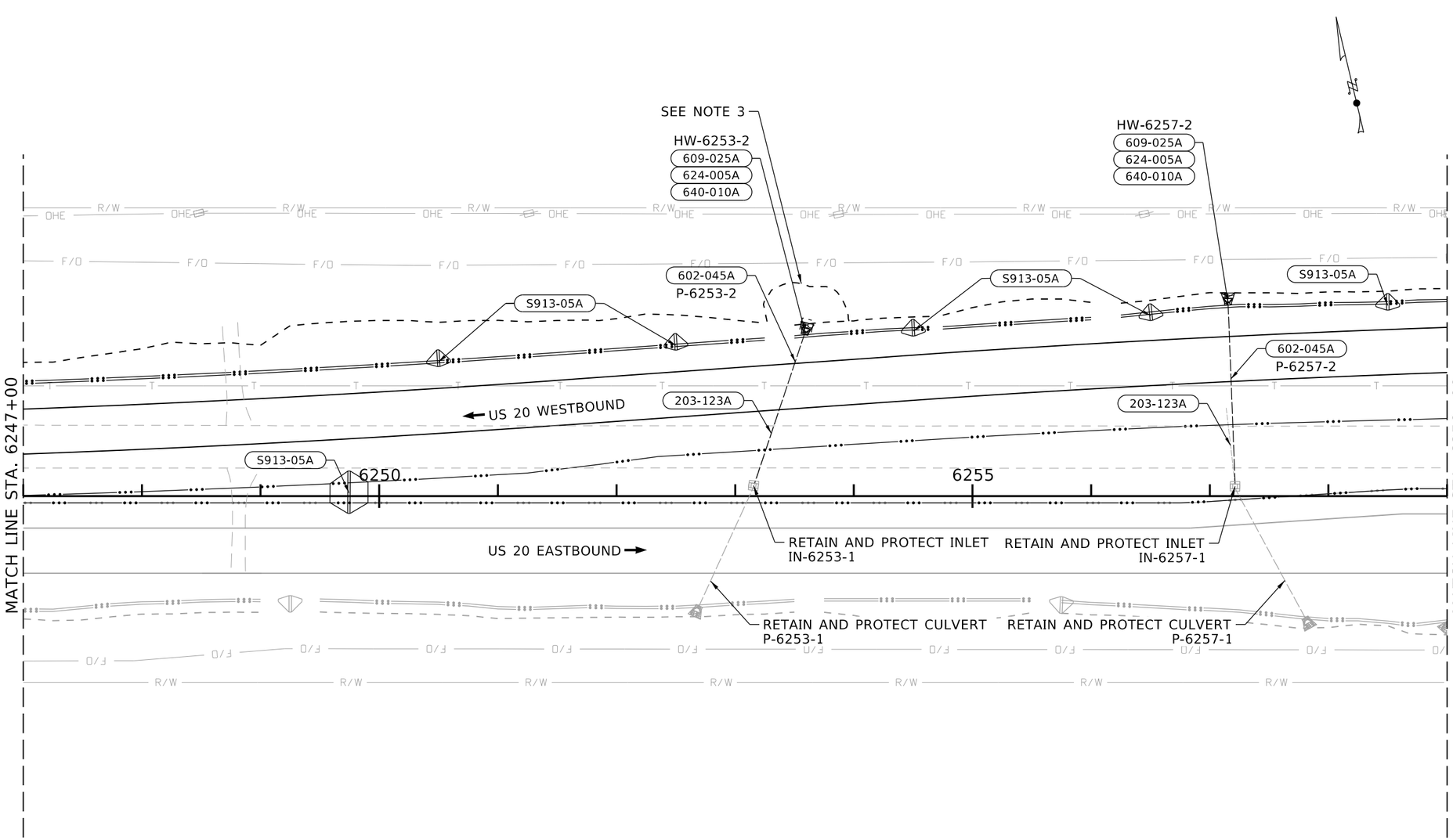

203-123A REMOVAL OF MISCELLANEOUS ITEMS (PIPE)

68 FT	STA. 6253+16.00, 10.58' LT TO STA. 6253+37.40, 74.16' LT
65 FT	STA. 6257+13.82, 74.39' LT TO STA. 6257+21.21, 10.42' LT

602-045A 24" PIPE CULVERT

135 FT	STA. 6253+15.48, 8.88' LT TO STA. 6253+45.29, 97.68' LT
154 FT	STA. 6257+09.71, 111.41' LT TO STA. 6257+21.29, 8.23' LT

609-025A MINOR STRUCTURES (24" CONCRETE HEADWALL)

1 EACH	STA. 6253+59.05, 138.17' LT
1 EACH	STA. 6257+03.84, 163.04' LT

624-005A LOOSE RIPRAP (CLASS I)

4.7 CY	STA. 6253+59.05, 138.17' LT
4.7 CY	STA. 6257+03.84, 163.04' LT

640-010A RIPRAP/EROSION CONTROL GEOTEXTILE

14 SY	STA. 6253+59.05, 138.17' LT
14 SY	STA. 6257+03.84, 163.04' LT

S913-05A SP DITCH BERM

21.9 CY	STA. 6249+75, 2.77' LT
4.9 CY	STA. 6250+50, 113.31' LT
4.9 CY	STA. 6252+50, 127.12' LT
4.9 CY	STA. 6254+50, 139.03' LT
4.9 CY	STA. 6256+50, 152.09' LT
4.9 CY	STA. 6258+50, 160.83' LT

NOTES:

1. SEE SP DITCH BERM DETAIL FOR DITCH BERM DIMENSIONS.
2. IN PHASE 2, REMOVE EXISTING CULVERT, MODIFY INLET OR JUNCTION BOX OPENING TO CONNECT PROPOSED CULVERT AND CONSTRUCT UNDER PHASE 2 ROADWAY.
3. SEE PIPE COVER AND DAYLIGHT DETAILS FOR GRADING INFORMATION.

Scale (Feet)
50 0 50 100

NOT APPROVED FOR CONSTRUCTION
INTERMEDIATE

REVISIONS			
NO.	DATE	BY	DESCRIPTION

DESIGNED D. ABEDI
DESIGN CHECKED C. MCALISTER
DETAILED P. CONSALVO
DRAWING CHECKED C. MCALISTER

SCALES SHOWN ARE FOR 11" X 17" PRINTS ONLY
CADD FILE NAME 24149_DrpI_D202C.DGN
DRAWING DATE: November 21, 2025

IDAHO TRANSPORTATION DEPARTMENT
YOUR Safety→YOUR Mobility→YOUR Economic Opportunity
DAVID EVANS AND ASSOCIATES INC.

PROJECT NO. A024(149)

DRAINAGE PLAN
US 20, BONNEVILLE COUNTY
LINE TO MP 291
STA. 6247+00 TO STA. 6259+00
PHASE 2

ENGLISH
COUNTY BINGHAM/BONNEVILLE
KEY NUMBER 24149
SHEET 269 OF 441

November 21, 2025 4:51:42 PM
pw://itd-pw.bentley.com:itd-pw-01/Documents/District 6/Projects/prj24394/Project_Development/Plan Sheets/Package 2 (KN 24149)/Drainage/24149_DrpI_D202C

T.3N., R.34E., B.M.

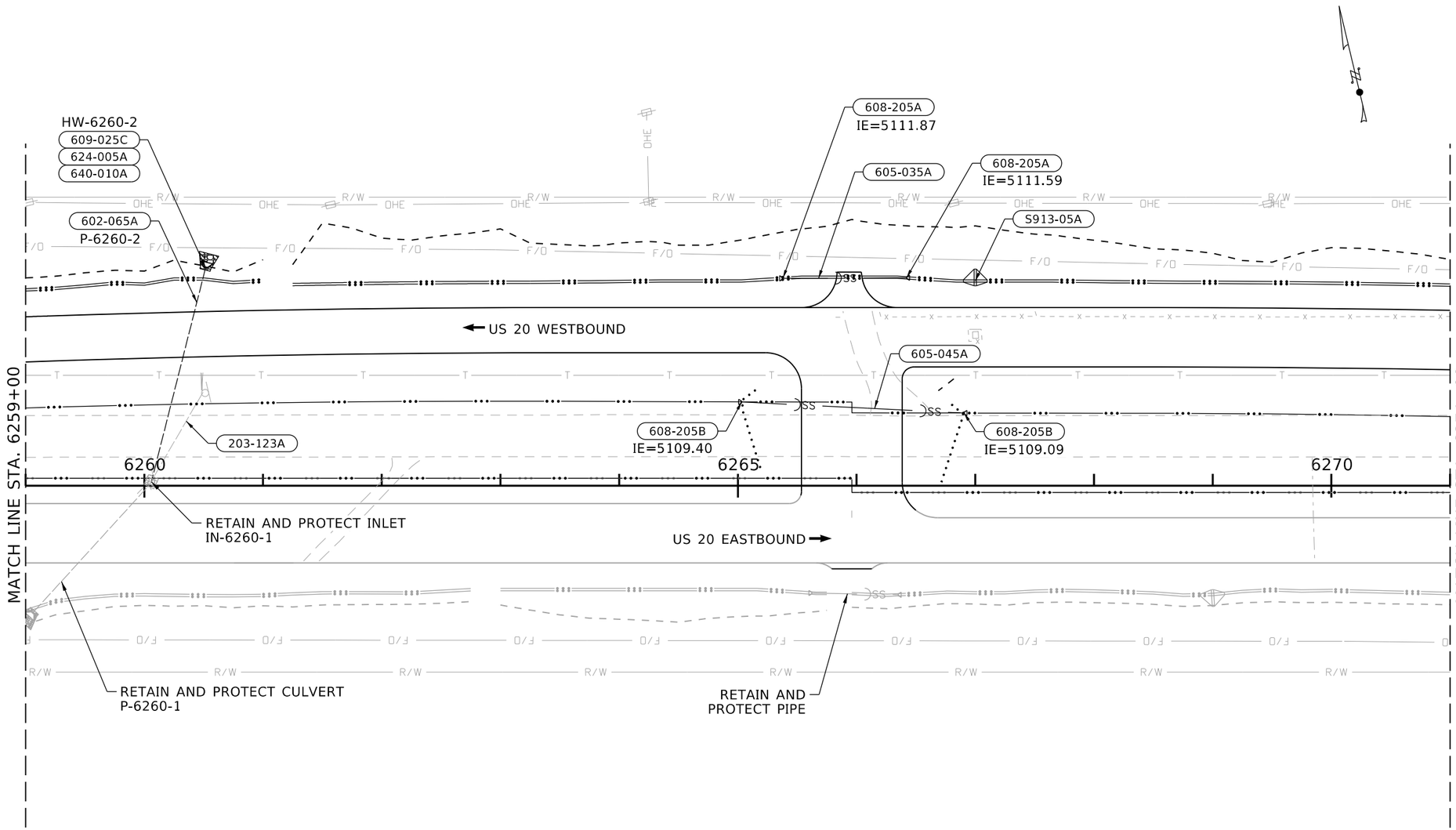

203-123A **REMOVAL OF MISCELLANEOUS ITEMS (PIPE)**
87 FT — STA. 6260+06.26, 4.42' LT TO STA. 6260+49.50, 77.41' LT

602-065A **36" PIPE CULVERT**
186 FT — STA. 6260+06.67, 3.32' LT TO STA. 6260+69.97, 113.64' LT

605-035A **18" STORM SEWER PIPE**
105 FT — STA. 6265+37.79, 174.64' LT TO STA. 6266+42.13, 175.19' LT

605-045A **24" STORM SEWER PIPE**
188 FT — STA. 6265+03.23, 70.55' LT TO STA. 6266+90.50, 61.22' LT

608-205A **METAL SAFETY APRON (PARALLEL) (18")**
1 EACH — STA. 6265+37.79, 174.64' LT
1 EACH — STA. 6266+42.13, 175.19' LT

608-205B **METAL SAFETY APRON (PARALLEL) (24")**
1 EACH — STA. 6265+03.23, 70.55' LT
1 EACH — STA. 6266+90.50, 61.22' LT

609-025C **MINOR STRUCTURES (36" CONCRETE HEADWALL)**
1 EACH — STA. 6260+40.59, 183.40' LT

624-005A **LOOSE RIPRAP (CLASS I)**
10.4 CY — STA. 6260+40.59, 183.40' LT

640-010A **RIPRAP/EROSION CONTROL GEOTEXTILE**
25 SY — STA. 6260+40.59, 183.40' LT

S913-05A **SP DITCH BERM**
4.9 CY — STA. 6267+00, 172.45' LT

NOTES:

1. SEE SP DITCH BERM DETAIL FOR DITCH BERM DIMENSIONS.

2. IN PHASE 2, REMOVE EXISTING CULVERT, MODIFY INLET OR JUNCTION BOX OPENING TO CONNECT PROPOSED CULVERT AND CONSTRUCT UNDER PHASE 2 ROADWAY.

3. SEE PIPE COVER AND DAYLIGHT DETAILS FOR GRADING INFORMATION.

Scale (Feet)
50 0 50 100

REVISIONS			
NO.	DATE	BY	DESCRIPTION

DESIGNED D. ABEDI
DESIGN CHECKED C. MCALISTER
DETAILED P. CONSALVO
DRAWING CHECKED C. MCALISTER

SCALES SHOWN ARE FOR 11" X 17" PRINTS ONLY
CADD FILE NAME 24149_DrpI_D202C.DGN
DRAWING DATE: November 21, 2025

IDAHO TRANSPORTATION DEPARTMENT
YOUR Safety→YOUR Mobility→YOUR Economic Opportunity
DAVID EVANS AND ASSOCIATES INC.

PROJECT NO. A024(149)

DRAINAGE PLAN
US 20, BONNEVILLE COUNTY
LINE TO MP 291
STA. 6259+00 TO STA. 6271+00
PHASE 2

ENGLISH
COUNTY BINGHAM/BONNEVILLE
KEY NUMBER 24149
SHEET 270 OF 441

NOT APPROVED
INTERMEDIATE
FOR CONSTRUCTION

November 21, 2025 4:51:45 PM
pw://itd-pw.bentley.com:itd-pw-01/Documents/District 6/Projects/prj24394/Project_Development/Plan Sheets/Package 2 (KN 24149)/Drainage/24149_DrpI_D202C

T.3N., R.34E., B.M.

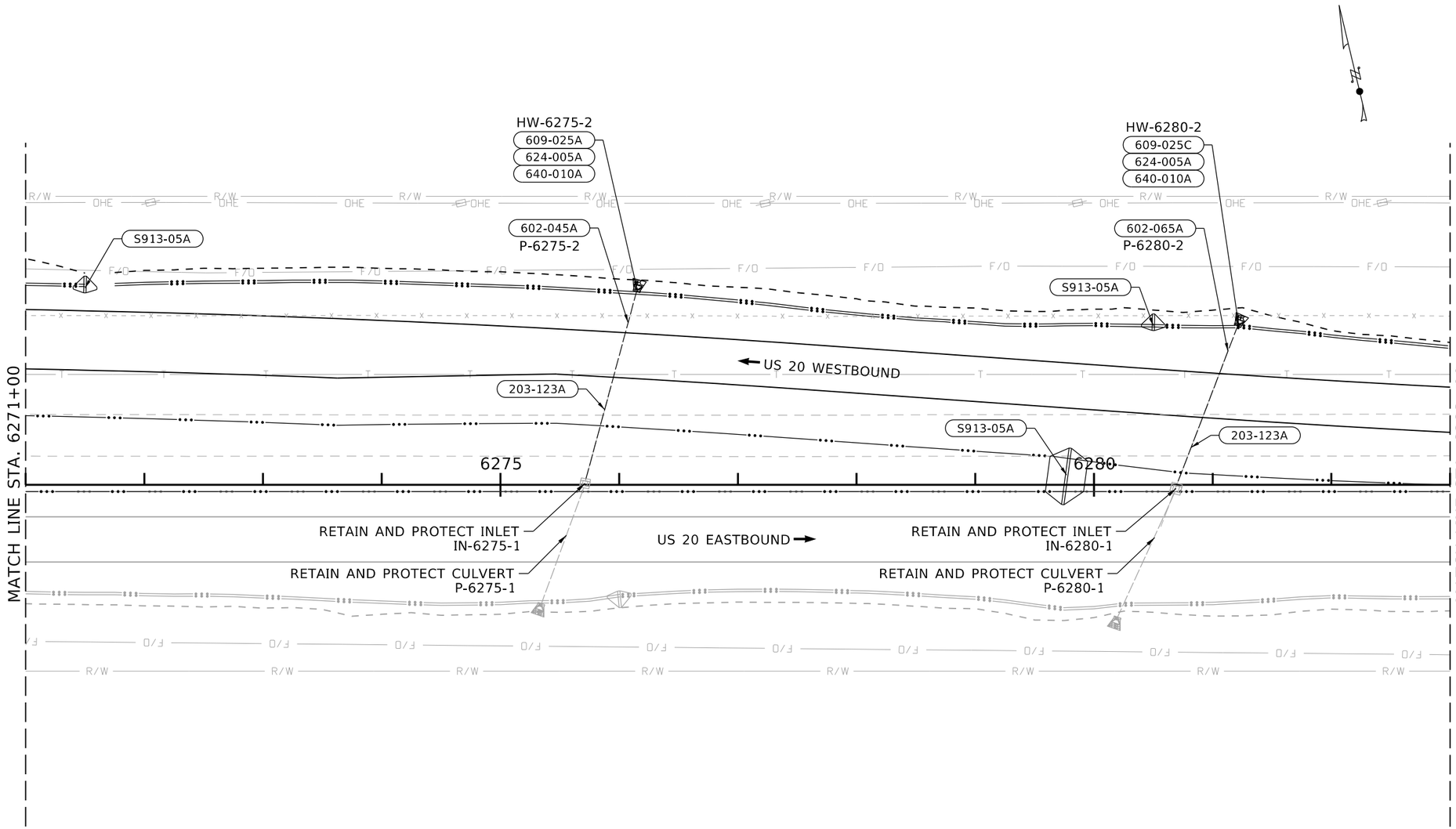

203-123A **REMOVAL OF MISCELLANEOUS ITEMS (PIPE)**
83 FT STA. 6275+71.46, 2.94' LT TO STA. 6275+93.09, 82.35' LT
128 FT STA. 6280+68.54, 3.24' LT TO STA. 6281+14.09, 116.12' LT

602-045A **24" PIPE CULVERT**
168 FT STA. 6275+71.24, 1.27' LT TO STA. 6275+99.92, 108.15' LT

602-065A **36" PIPE CULVERT**
147 FT STA. 6280+69.06, 3.24' LT TO STA. 6281+14.34, 115.98' LT

609-025A **MINOR STRUCTURES (24" CONCRETE HEADWALL)**
1 EACH STA. 6276+18.76, 177.93' LT

609-025C **MINOR STRUCTURES (36" CONCRETE HEADWALL)**
1 EACH STA. 6281+26.69, 149.33' LT

624-005A **LOOSE RIPRAP (CLASS I)**
4.7 CY STA. 6276+18.76, 177.93' LT
10.4 CY STA. 6281+26.69, 149.33' LT

640-010A **RIPRAP/EROSION CONTROL GEOTEXTILE**
14 SY STA. 6276+18.76, 177.93' LT
25 SY STA. 6281+26.69, 149.33' LT

S913-05A **SP DITCH BERM**
4.9 CY STA. 6271+50, 165.76' LT
32.5 CY STA. 6279+75, 8.23' LT
4.9 CY STA. 6280+50, 134.02' LT

NOTES:

1. SEE SP DITCH BERM DETAIL FOR DITCH BERM DIMENSIONS.

2. IN PHASE 2, REMOVE EXISTING CULVERT, MODIFY INLET OR JUNCTION BOX OPENING TO CONNECT PROPOSED CULVERT AND CONSTRUCT UNDER PHASE 2 ROADWAY.

3. SEE PIPE COVER AND DAYLIGHT DETAILS FOR GRADING INFORMATION.

Scale (Feet)
50 0 50 100

NOT APPROVED
INTERMEDIATE
FOR CONSTRUCTION

REVISIONS			
NO.	DATE	BY	DESCRIPTION

DESIGNED D. ABEDI
DESIGN CHECKED C. MCALISTER
DETAILED P. CONSALVO
DRAWING CHECKED C. MCALISTER

SCALES SHOWN ARE FOR 11" X 17" PRINTS ONLY
CADD FILE NAME 24149_DrpI_D202C.DGN
DRAWING DATE: November 21, 2025

IDAHO TRANSPORTATION DEPARTMENT
YOUR Safety→YOUR Mobility→YOUR Economic Opportunity
DAVID EVANS AND ASSOCIATES INC.

PROJECT NO. A024(149)

DRAINAGE PLAN
US 20, BONNEVILLE COUNTY
LINE TO MP 291
STA. 6271+00 TO STA. 6283+00
PHASE 2

ENGLISH
COUNTY BINGHAM/BONNEVILLE
KEY NUMBER 24149
SHEET 271 OF 441

November 21, 2025 4:51:48 PM
pw://itd-pw.bentley.com:itd-pw-01/Documents/District 6/Projects/prj24394/Project_Development/Plan Sheets/Package 2 (KN 24149)/Drainage/24149_DrpI_D202C

T.3N., R.34E., B.M.

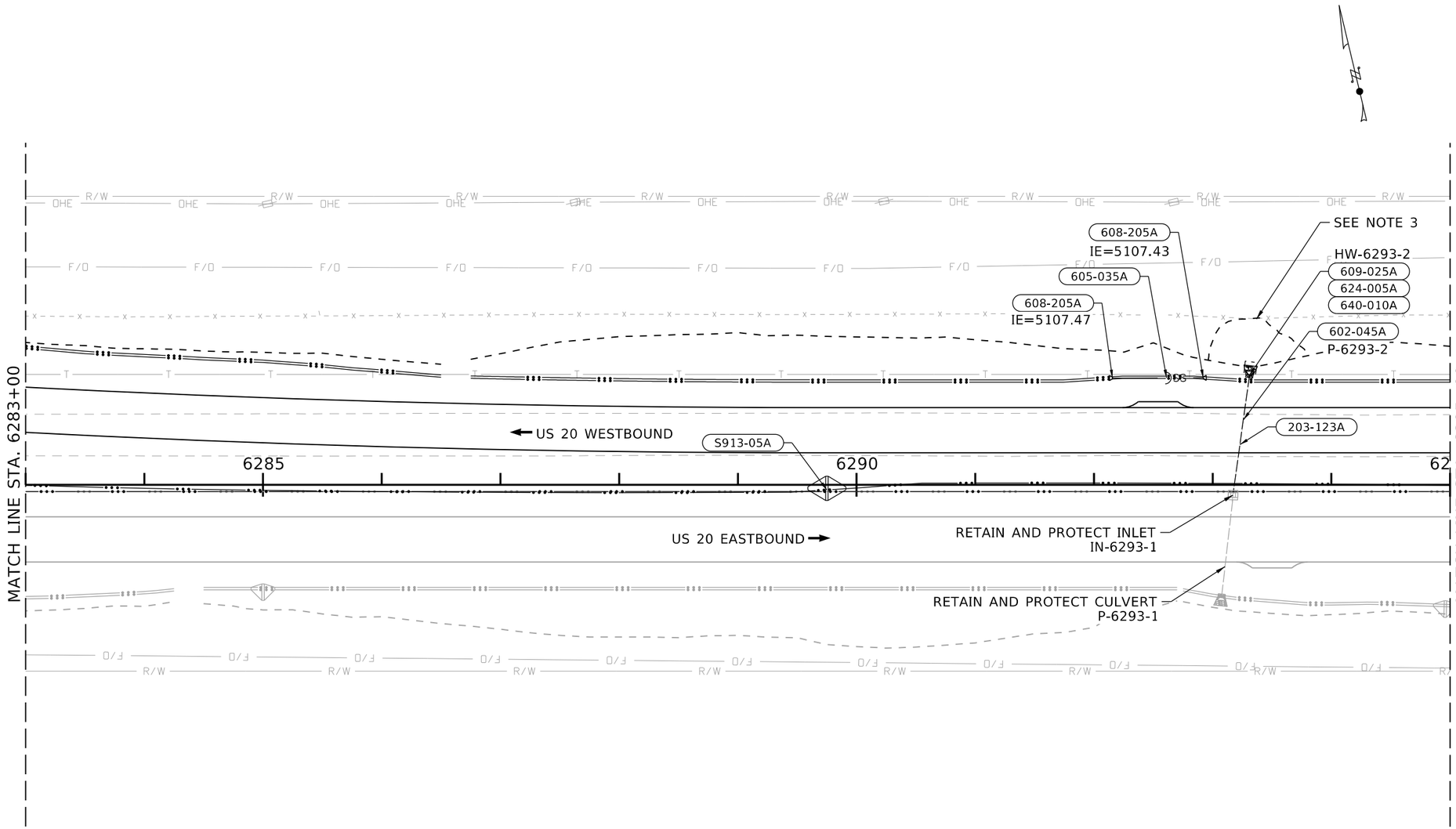

203-123A **REMOVAL OF MISCELLANEOUS ITEMS (PIPE)**
103 FT STA. 6293+17.06, 2.94' RT TO STA. 6293+31.16, 92.48' LT

602-045A **24" PIPE CULVERT**
101 FT STA. 6293+17.19, 8.62' RT TO STA. 6293+30.99, 92.51' LT

605-035A **18" STORM SEWER PIPE**
77 FT STA. 6292+15.58, 89.96' LT TO STA. 6292+92.00, 90.16' LT

608-205A **METAL SAFETY APRON (PARALLEL) (18")**
1 EACH STA. 6292+15.58, 89.96' LT
1 EACH STA. 6292+92.00, 90.16' LT

609-025A **MINOR STRUCTURES (24" CONCRETE HEADWALL)**
1 EACH STA. 6293+30.99, 92.51' LT

624-005A **LOOSE RIPRAP (CLASS I)**
4.7 CY STA. 6293+30.99, 92.51' LT

609-025A **RIPRAP/EROSION CONTROL GEOTEXTILE**
14 SY STA. 6293+30.99, 92.51' LT

S913-05A **SP DITCH BERM**
13.1 CY STA. 6289+75, 2.96' RT

NOTES:

1. SEE SP DITCH BERM DETAIL FOR DITCH BERM DIMENSIONS.

2. IN PHASE 2, REMOVE EXISTING CULVERT, MODIFY INLET OR JUNCTION BOX OPENING TO CONNECT PROPOSED CULVERT AND CONSTRUCT UNDER PHASE 2 ROADWAY.

3. SEE PIPE COVER AND DAYLIGHT DETAILS FOR GRADING INFORMATION.

Scale (Feet)
50 0 50 100

NOT APPROVED FOR CONSTRUCTION
INTERMEDIATE

REVISIONS			
NO.	DATE	BY	DESCRIPTION

DESIGNED D. ABEDI
DESIGN CHECKED C. MCALISTER
DETAILED P. CONSALVO
DRAWING CHECKED C. MCALISTER

SCALES SHOWN ARE FOR 11" X 17" PRINTS ONLY
CADD FILE NAME 24149_DrpI_D202C.DGN
DRAWING DATE: November 21, 2025

IDAHO TRANSPORTATION DEPARTMENT
YOUR Safety→YOUR Mobility→YOUR Economic Opportunity
DAVID EVANS AND ASSOCIATES INC.

PROJECT NO. A024(149)

DRAINAGE PLAN
US 20, BONNEVILLE COUNTY
LINE TO MP 291
STA. 6283+00 TO STA. 6295+00
PHASE 2

ENGLISH
COUNTY BINGHAM/BONNEVILLE
KEY NUMBER 24149
SHEET 272 OF 441

November 21, 2025 4:51:51 PM
pw://itd-pw.bentley.com:itd-pw-01/Documents/District 6/Projects/prj24394/Project_Development/Plan Sheets/Package 2 (KN 24149)/Drainage/24149_DrpI_D202C

T.3N., R.34E., B.M.

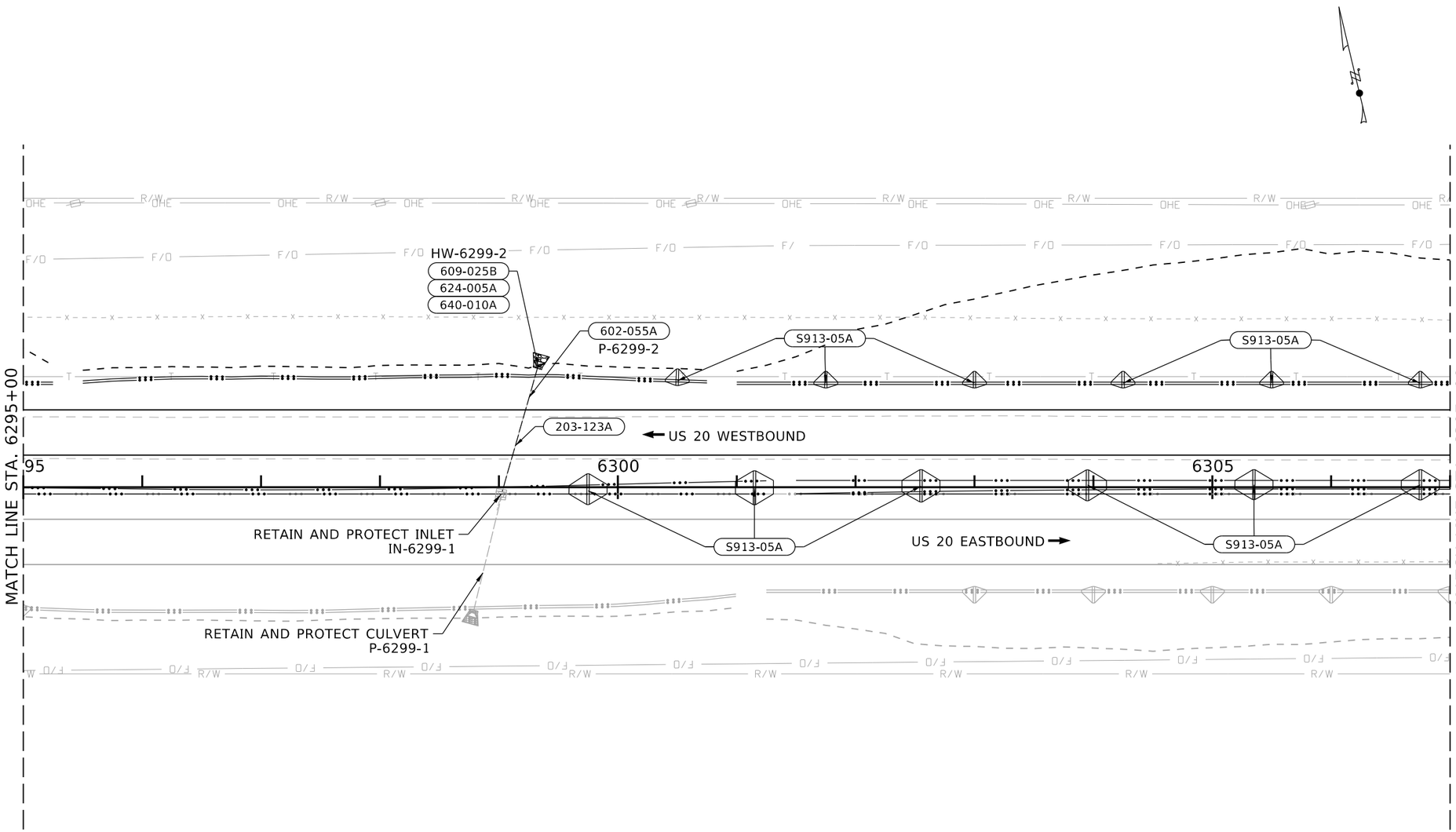

203-123A	**REMOVAL OF MISCELLANEOUS ITEMS (PIPE)**
71 FT	STA. 6299+03.84, 0.00' LT TO STA. 6299+32.99, 102.02' LT
602-055A	**30" PIPE CULVERT**
111 FT	STA. 6299+01.76, 5.98' RT TO STA. 6299+32.88, 102.71' LT
609-025B	**MINOR STRUCTURES (30" CONCRETE HEADWALL)**
1 EACH	STA. 6299+32.88, 102.71' LT
624-005A	**LOOSE RIPRAP (CLASS I)**
7.3 CY	STA. 6299+32.88, 102.71' LT
640-010A	**RIPRAP/EROSION CONTROL GEOTEXTILE**
19 SY	STA. 6299+32.88, 102.71' LT
S913-05A	**SP DITCH BERM**
13.1 CY	STA. 6299+75, 2.97' RT
4.9 CY	STA. 6300+50, 89.51' LT
16.2 CY	STA. 6301+15, 0.00' RT
4.9 CY	STA. 6301+75, 87.39' LT
14.8 CY	STA. 6302+55, 0.98' LT
4.9 CY	STA. 6303+00, 87.51' LT
13.4 CY	STA. 6303+95, 2.09' LT
4.9 CY	STA. 6304+25, 87.45' LT
12.7 CY	STA. 6305+35, 1.76' LT
4.9 CY	STA. 6305+50, 87.45' LT
12.9 CY	STA. 6306+75, 2.01' LT
4.9 CY	STA. 6306+75, 87.39' LT

NOTES:

1. SEE SP DITCH BERM DETAIL FOR DITCH BERM DIMENSIONS.
2. IN PHASE 2, REMOVE EXISTING CULVERT, MODIFY INLET OR JUNCTION BOX OPENING TO CONNECT PROPOSED CULVERT AND CONSTRUCT UNDER PHASE 2 ROADWAY.
3. SEE PIPE COVER AND DAYLIGHT DETAILS FOR GRADING INFORMATION.

Scale (Feet)
50 0 50 100

REVISIONS			
NO.	DATE	BY	DESCRIPTION

DESIGNED D. ABEDI	SCALES SHOWN ARE FOR 11" X 17" PRINTS ONLY
DESIGN CHECKED C. MCALISTER	
DETAILED P. CONSALVO	CADD FILE NAME 24149_DrpI_D202C.DGN
DRAWING CHECKED C. MCALISTER	DRAWING DATE: November 21, 2025

IDAHO TRANSPORTATION DEPARTMENT
YOUR Safety→YOUR Mobility→YOUR Economic Opportunity
DAVID EVANS AND ASSOCIATES INC.

PROJECT NO.	DRAINAGE PLAN
A024(149)	US 20, BONNEVILLE COUNTY LINE TO MP 291 STA. 6295+00 TO STA. 6307+00 PHASE 2

ENGLISH

COUNTY BINGHAM/BONNEVILLE

KEY NUMBER 24149

SHEET 273 OF 441

NOT APPROVED
INTERMEDIATE
FOR CONSTRUCTION

November 21, 2025 4:51:55 PM
pw://itd-pw.bentley.com:itd-pw-01/Documents/District 6/Projects/prj24394/Project_Development/Plan Sheets/Package 2 (KN 24149)/Drainage/24149_DrpI_D202C

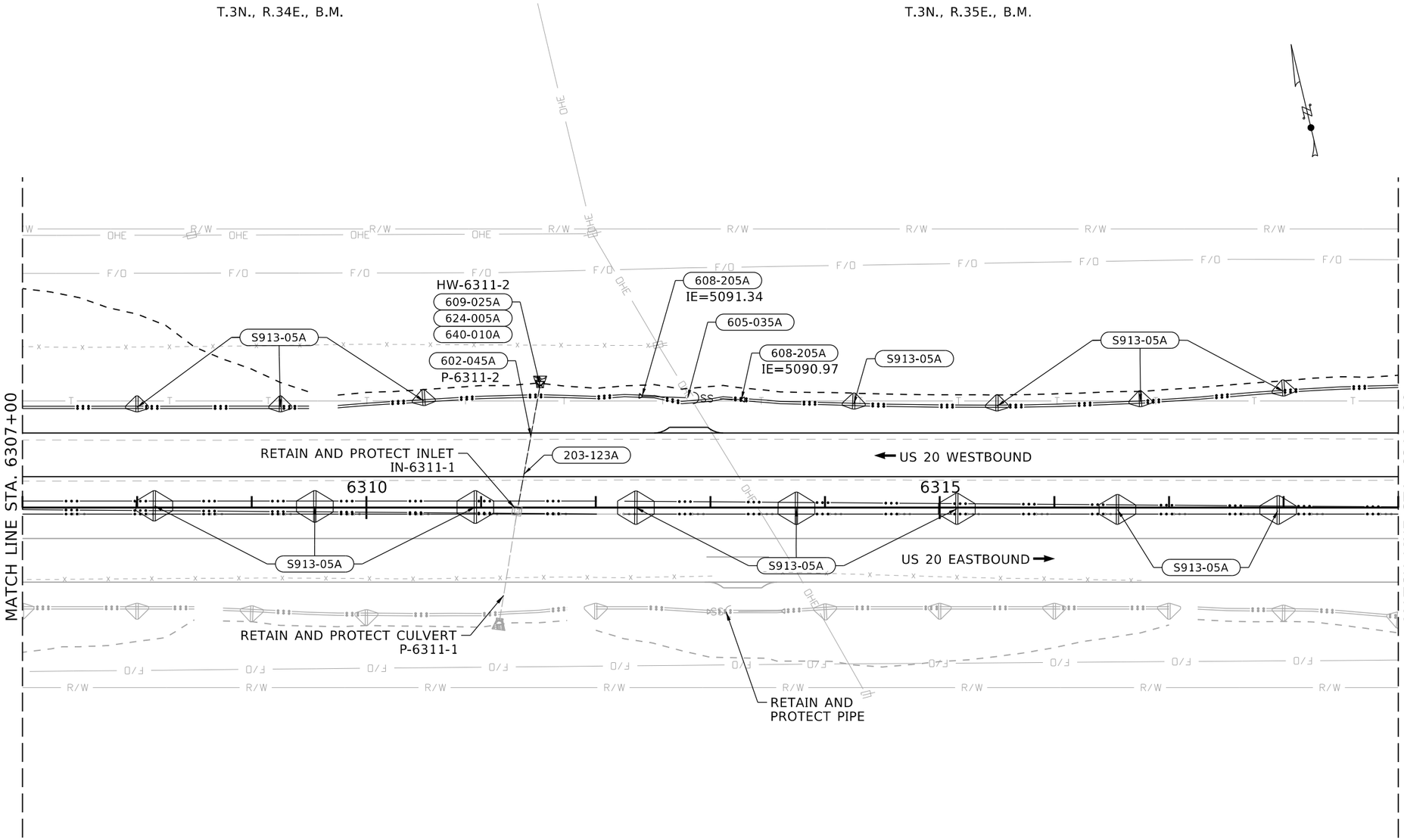

203-123A **REMOVAL OF MISCELLANEOUS ITEMS (PIPE)**
112 FT — STA. 6311+31.59, 2.96' LT TO STA. 6311+51.46, 106.61' LT

602-045A **24" PIPE CULVERT**
110 FT — STA. 6311+31.24, 2.90' LT TO STA. 6311+51.30, 106.60' LT

605-035A **18" STORM SEWER PIPE**
87 FT — STA. 6312+40.43, 97.10' LT TO STA. 6313+27.18, 94.26' LT

608-205A **METAL SAFETY APRON (PARALLEL) (18")**
1 EACH — STA. 6312+40.43, 97.10' LT
1 EACH — STA. 6313+27.18, 94.26' LT

609-025A **MINOR STRUCTURES (24" CONCRETE HEADWALL)**
1 EACH — STA. 6311+51.29, 106.61' LT

624-005A **LOOSE RIPRAP (CLASS I)**
4.7 CY — STA. 6311+51.29, 106.61' LT

640-010A **RIPRAP/EROSION CONTROL GEOTEXTILE**
14 SY — STA. 6311+51.29, 106.61' LT

S913-05A **SP DITCH BERM**
4.9 CY — STA. 6308+00, 87.45' LT
13.9 CY — STA. 6308+15, 1.50' LT
4.9 CY — STA. 6309+25, 87.45' LT
14.8 CY — STA. 6309+55, 0.99' LT
4.9 CY — STA. 6310+50, 93.06' LT
15.8 CY — STA. 6310+95, 0.46' LT
16.6 CY — STA. 6312+35, 0.00' LT
15.6 CY — STA. 6313+75, 0.58' RT
4.9 CY — STA. 6314+25, 89.94' LT
14.6 CY — STA. 6315+15, 1.18' RT
4.9 CY — STA. 6315+50, 88.37' LT
13.6 CY — STA. 6316+55, 1.54' RT
4.9 CY — STA. 6316+75, 92.00' LT
12.6 CY — STA. 6317+95, 1.85' RT
4.9 CY — STA. 6318+00, 101.39' LT

NOTES:

1. SEE SP DITCH BERM DETAIL FOR DITCH BERM DIMENSIONS.
2. IN PHASE 2, REMOVE EXISTING CULVERT, MODIFY INLET OR JUNCTION BOX OPENING TO CONNECT PROPOSED CULVERT AND CONSTRUCT UNDER PHASE 2 ROADWAY.
3. SEE PIPE COVER AND DAYLIGHT DETAILS FOR GRADING INFORMATION.

Scale (Feet)
50 0 50 100

REVISIONS			
NO.	DATE	BY	DESCRIPTION

DESIGNED D. ABEDI
DESIGN CHECKED C. MCALISTER
DETAILED P. CONSALVO
DRAWING CHECKED C. MCALISTER

SCALES SHOWN ARE FOR 11" X 17" PRINTS ONLY
CADD FILE NAME 24149_DrpI_D202C.DGN
DRAWING DATE: November 21, 2025

IDAHO TRANSPORTATION DEPARTMENT
YOUR Safety→YOUR Mobility→YOUR Economic Opportunity
DAVID EVANS AND ASSOCIATES INC.

PROJECT NO. A024(149)

DRAINAGE PLAN
US 20, BONNEVILLE COUNTY
LINE TO MP 291
STA. 6307+00 TO STA. 6319+00
PHASE 2

ENGLISH
COUNTY BINGHAM/BONNEVILLE
KEY NUMBER 24149
SHEET 274 OF 441

NOT APPROVED
INTERMEDIATE
FOR CONSTRUCTION

November 21, 2025 4:51:58 PM
pw://itd-pw.bentley.com:itd-pw-01/Documents/District 6/Projects/prj24394/Project_Development/Plan Sheets/Package 2 (KN 24149)/Drainage/24149_DrpI_D202C

T.3N., R.35E., B.M.

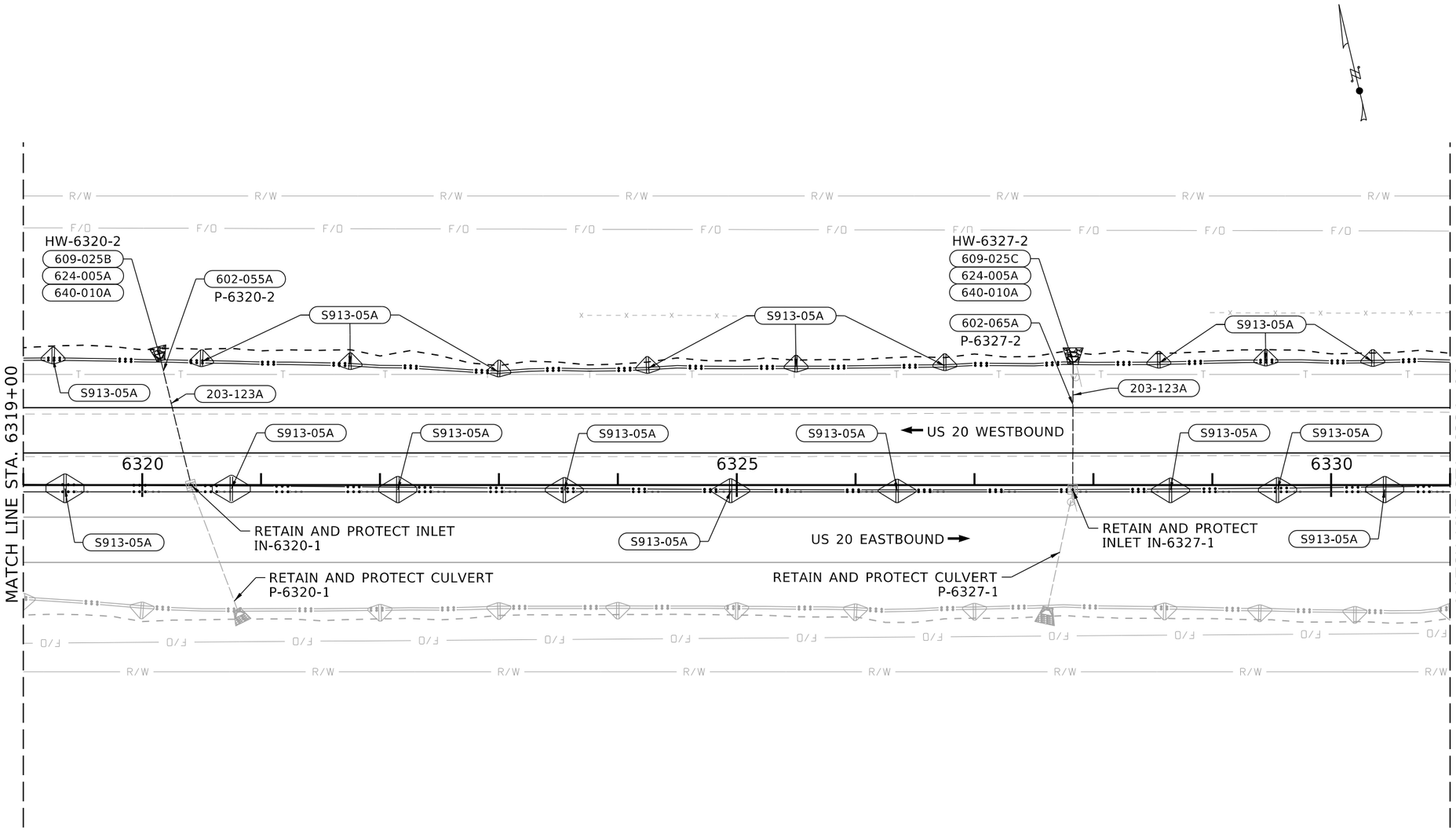

203-123A **REMOVAL OF MISCELLANEOUS ITEMS (PIPE)**

103 FT	STA. 6320+18.02, 94.05' LT TO STA. 6320+42.36, 5.22' RT
99 FT	STA. 6327+82.61, 8.25' RT TO STA. 6327+82.93, 90.37' LT

602-055A **30" PIPE CULVERT**

111 FT	STA. 6320+15.96, 102.82' LT TO STA. 6320+42.23, 5.22' RT

602-065A **36" PIPE CULVERT**

106 FT	STA. 6327+82.68, 8.25' RT TO STA. 6327+82.71, 99.47' LT

609-025B **MINOR STRUCTURES (30" CONCRETE HEADWALL)**

1 EACH	STA. 6320+15.96, 102.82' LT

609-025C **MINOR STRUCTURES (36" CONCRETE HEADWALL)**

1 EACH	STA. 6327+82.71, 99.47' LT

624-005A **LOOSE RIPRAP (CLASS I)**

7.3 CY	STA. 6320+15.96, 102.82' LT
10.4 CY	STA. 6327+82.71, 99.47' LT

640-010A **RIPRAP/EROSION CONTROL GEOTEXTILE**

19 SY	STA. 6320+15.96, 102.82' LT
25 SY	STA. 6327+82.71, 99.47' LT

S913-05A **SP DITCH BERM**

4.9 CY	STA. 6319+25, 105.94' LT
11.7 CY	STA. 6319+35, 2.99' RT
4.9 CY	STA. 6320+50, 103.62' LT
10.7 CY	STA. 6320+75, 2.99' RT
4.9 CY	STA. 6321+75, 101.19' LT
9.7 CY	STA. 6322+15, 3.71' RT
4.9 CY	STA. 6323+00, 95.03' LT
8.7 CY	STA. 6323+55, 4.23' RT
4.9 CY	STA. 6324+25, 97.98' LT
7.8 CY	STA. 6324+95, 4.68' RT
4.9 CY	STA. 6325+50, 99.03' LT
7.5 CY	STA. 6326+35, 4.85' RT
4.9 CY	STA. 6326+75, 100.33' LT
4.9 CY	STA. 6328+55, 102.42' LT
8.3 CY	STA. 6328+65, 4.41' RT
4.9 CY	STA. 6329+45, 104.13' LT
9.0 CY	STA. 6329+55, 4.10' RT
4.9 CY	STA. 6330+35, 103.78' LT
9.9 CY	STA. 6330+45, 3.60' RT

NOTES:

1. SEE SP DITCH BERM DETAIL FOR DITCH BERM DIMENSIONS.

2. IN PHASE 2, REMOVE EXISTING CULVERT, MODIFY INLET OR JUNCTION BOX OPENING TO CONNECT PROPOSED CULVERT AND CONSTRUCT UNDER PHASE 2 ROADWAY.

3. SEE PIPE COVER AND DAYLIGHT DETAILS FOR GRADING INFORMATION.

Scale (Feet)
50 0 50 100

REVISIONS				DESIGNED	SCALES SHOWN ARE FOR 11" X 17" PRINTS ONLY	IDAHO TRANSPORTATION DEPARTMENT	PROJECT NO.	DRAINAGE PLAN	ENGLISH
NO.	DATE	BY	DESCRIPTION	D. ABEDI					
				DESIGN CHECKED C. MCALISTER			A024(149)	US 20, BONNEVILLE COUNTY LINE TO MP 291 STA. 6319+00 TO STA. 6331+00 PHASE 2	COUNTY BINGHAM/BONNEVILLE
				DETAILED P. CONSALVO	CADD FILE NAME 24149_Drpl_D202D.DGN	YOUR Safety→YOUR Mobility→YOUR Economic Opportunity			KEY NUMBER 24149
				DRAWING CHECKED C. MCALISTER	DRAWING DATE: November 21, 2025	DAVID EVANS AND ASSOCIATES INC.			SHEET 275 OF 441

NOT APPROVED FOR INTERMEDIATE CONSTRUCTION

November 21, 2025 4:52:19 PM
pw://itd-pw.bentley.com:itd-pw-01/Documents/District 6/Projects/prj24394/Project_Development/Plan Sheets/Package 2 (KN 24149)/Drainage/24149_Drpl_D202D

T.3N., R.35E., B.M.

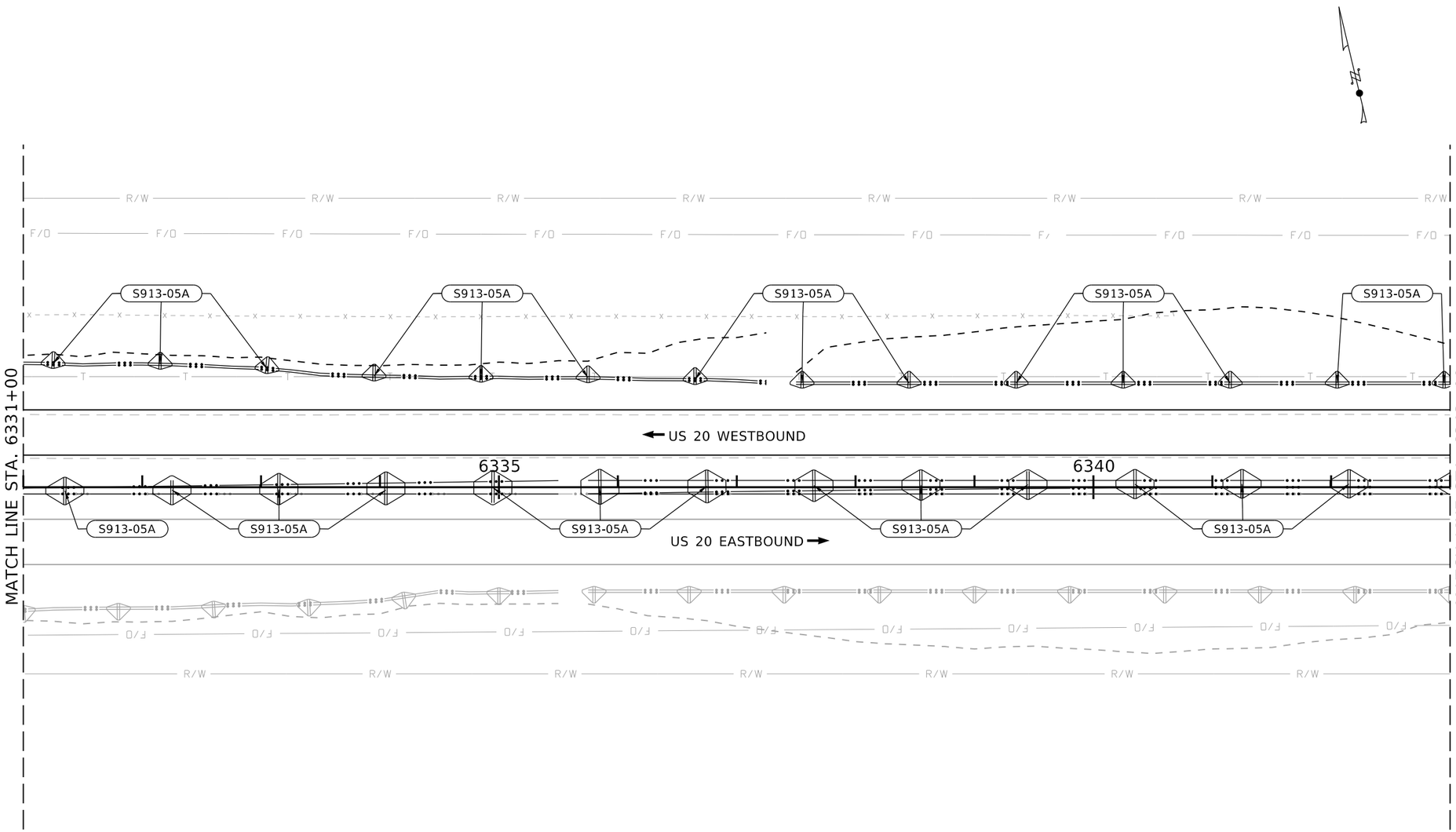

S913-05A	SP DITCH BERM
4.9 CY	STA. 6331+25, 103.92' LT
11.0 CY	STA. 6331+35, 2.99' RT
4.9 CY	STA. 6332+15, 103.31' LT
12.2 CY	STA. 6332+25, 2.36' RT
4.9 CY	STA. 6333+05, 99.62' LT
13.4 CY	STA. 6333+15, 1.73' RT
4.9 CY	STA. 6333+95, 93.42 LT
14.6 CY	STA. 6334+05, 2.39' RT
4.9 CY	STA. 6334+85, 92.30' LT
15.8 CY	STA. 6334+95, 0.46' RT
4.9 CY	STA. 6335+75, 92.01' LT
16.4 CY	STA. 6335+85, 0.17' LT
4.9 CY	STA. 6336+65, 90.43' LT
15.2 CY	STA. 6336+75, 0.80' LT
4.9 CY	STA. 6337+55, 87.42' LT
14.1 CY	STA. 6337+65, 1.36' LT
13.2 CY	STA. 6338+55, 1.84' LT
4.9 CY	STA. 6339+45, 87.42' LT
12.5 CY	STA. 6339+45, 2.22' LT
4.9 CY	STA. 6339+35, 87.42' LT
4.9 CY	STA. 6340+25, 87.42' LT
11.9 CY	STA. 6340+35, 2.52' LT
4.9 CY	STA. 6341+15, 87.42' LT
11.5 CY	STA. 6341+25, 2.73' LT
4.9 CY	STA. 6342+05, 87.42' LT
11.3 CY	STA. 6342+15, 2.85' LT
4.9 CY	STA. 6342+95, 87.42' LT

NOTES:

1. SEE SP DITCH BERM DETAIL FOR DITCH BERM DIMENSIONS.

Scale (Feet)
50 0 50 100

REVISIONS			
NO.	DATE	BY	DESCRIPTION

DESIGNED D. ABEDI	SCALES SHOWN ARE FOR 11" X 17" PRINTS ONLY	IDAHO TRANSPORTATION DEPARTMENT YOUR Safety→YOUR Mobility→YOUR Economic Opportunity DAVID EVANS AND ASSOCIATES INC.
DESIGN CHECKED C. MCALISTER		
DETAILED P. CONSALVO	CADD FILE NAME 24149_DrpI_D202D.DGN	
DRAWING CHECKED C. MCALISTER	DRAWING DATE: November 21, 2025	

PROJECT NO.	DRAINAGE PLAN	ENGLISH
A024(149)	US 20, BONNEVILLE COUNTY LINE TO MP 291 STA. 6331+00 TO STA. 6343+00 PHASE 2	COUNTY BINGHAM/BONNEVILLE KEY NUMBER 24149 SHEET 276 OF 441

NOT APPROVED
INTERMEDIATE FOR CONSTRUCTION

November 21, 2025 4:52:23 PM
pw://itd-pw.bentley.com:itd-pw-01/Documents/District 6/Projects/prj24394/Project_Development/Plan Sheets/Package 2 (KN 24149)/Drainage/24149_DrpI_D202D

T.3N., R.35E., B.M.

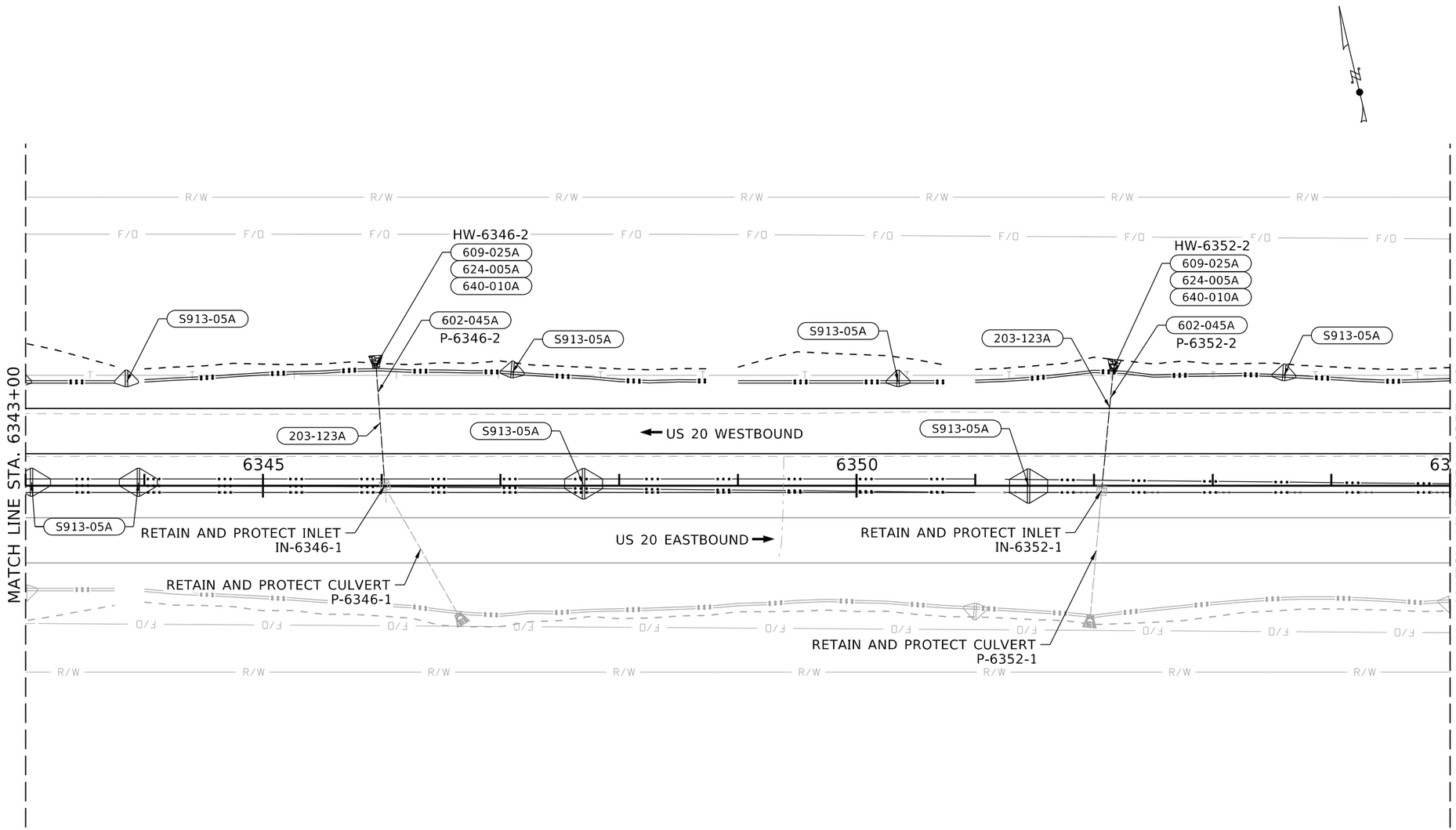

203-123A REMOVAL OF MISCELLANEOUS ITEMS (PIPE)

98 FT	STA. 6345+95.50, 97.43' LT TO STA. 6346+02.64, 0.00' LT
104 FT	STA. 6352+06.46, 3.95' LT TO STA. 6352+16.31, 98.34' LT

602-045A 24" PIPE CULVERT

101 FT	STA. 6345+96.05, 96.98' LT TO STA. 6346+02.64, 0.00' LT
102 FT	STA. 6352+06.46, 3.95' LT TO STA. 6352+16.48, 98.32' LT

609-025A MINOR STRUCTURES (24" CONCRETE HEADWALL)

1 EACH	STA. 6345+96.05, 96.98' LT
1 EACH	STA. 6352+16.48, 98.32' LT

624-005A LOOSE RIPRAP (CLASS I)

4.7 CY	STA. 6345+96.05, 96.98' LT
4.7 CY	STA. 6352+16.48, 98.32' LT

640-010A RIPRAP/EROSION CONTROL GEOTEXTILE

14 SY	STA. 6345+96.05, 96.98' LT
14 SY	STA. 6352+16.48, 98.32' LT

S913-05A SP DITCH BERM

11.2 CY	STA. 6343+05, 2.89' LT
4.9 CY	STA. 6343+85, 87.42' LT
11.3 CY	STA. 6343+95, 2.83' LT
4.9 CY	STA. 6347+10, 94.94' LT
13.6 CY	STA. 6347+70, 1.65' LT
4.9 CY	STA. 6350+35, 87.45' LT
16.3 CY	STA. 6351+45, 0.22' RT
4.9 CY	STA. 6353+60, 92.42' LT

NOTES:

1. SEE SP DITCH BERM DETAIL FOR DITCH BERM DIMENSIONS.
2. IN PHASE 2, REMOVE EXISTING CULVERT, MODIFY INLET OR JUNCTION BOX OPENING TO CONNECT PROPOSED CULVERT AND CONSTRUCT UNDER PHASE 2 ROADWAY.
3. SEE PIPE COVER AND DAYLIGHT DETAILS FOR GRADING INFORMATION.

Scale (Feet)
50 0 50 100

REVISIONS			
NO.	DATE	BY	DESCRIPTION

DESIGNED D. ABEDI
DESIGN CHECKED C. MCALISTER
DETAILED P. CONSALVO
DRAWING CHECKED C. MCALISTER

SCALES SHOWN ARE FOR 11" X 17" PRINTS ONLY
CADD FILE NAME 24149_DrpI_D202D.DGN
DRAWING DATE: November 21, 2025

IDAHO TRANSPORTATION DEPARTMENT
YOUR Safety→YOUR Mobility→YOUR Economic Opportunity
DAVID EVANS AND ASSOCIATES INC.

PROJECT NO. A024(149)

DRAINAGE PLAN
US 20, BONNEVILLE COUNTY
LINE TO MP 291
STA. 6343+00 TO STA. 6355+00
PHASE 2

ENGLISH
COUNTY BINGHAM/BONNEVILLE
KEY NUMBER 24149
SHEET 277 OF 441

NOT APPROVED
INTERMEDIATE
FOR CONSTRUCTION

November 21, 2025 4:52:27 PM
pw://itd-pw.bentley.com:itd-pw-01/Documents/District 6/Projects/prj24394/Project_Development/Plan Sheets/Package 2 (KN 24149)/Drainage/24149_DrpI_D202D

T.3N., R.35E., B.M.

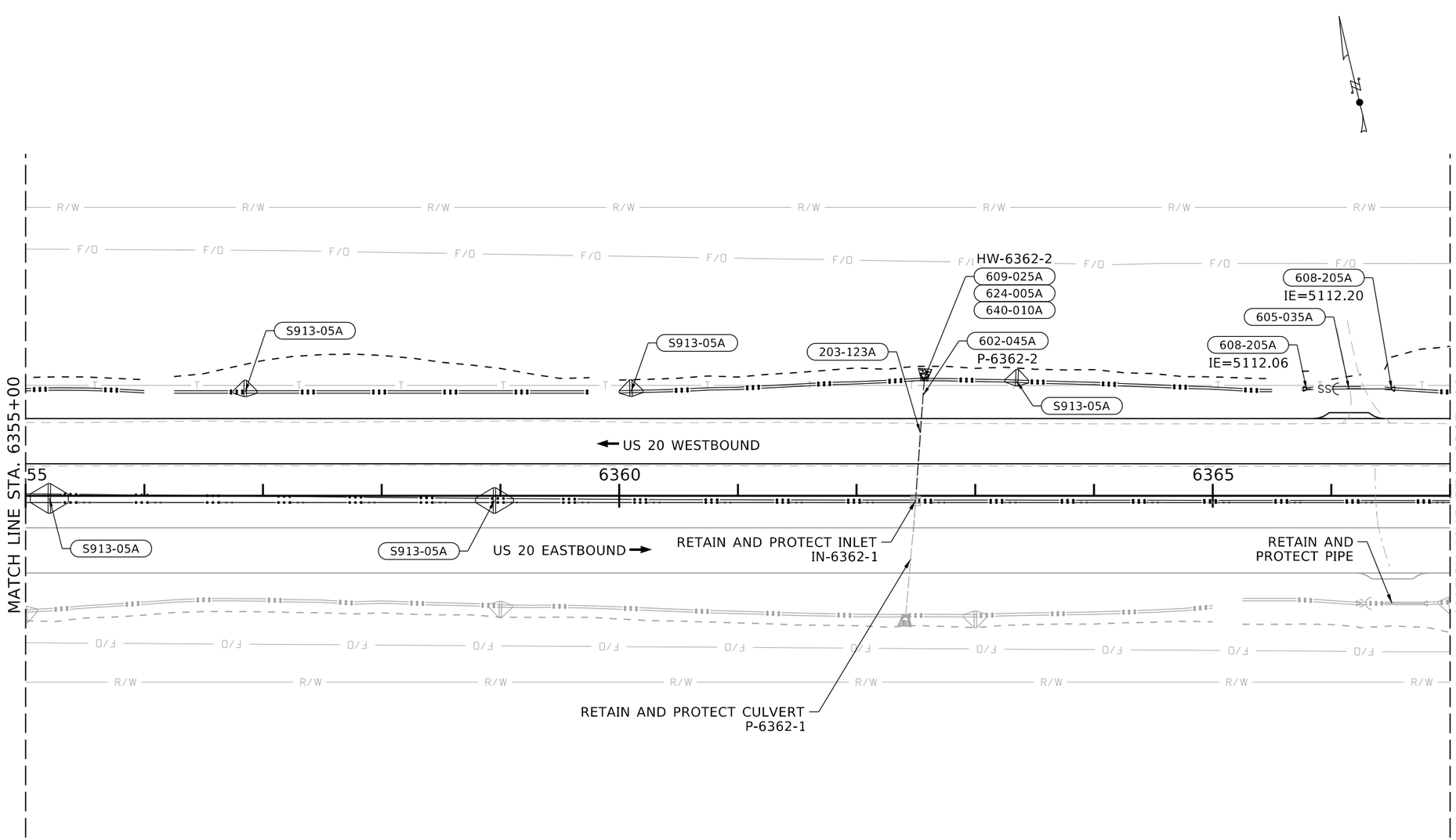

203-123A	**REMOVAL OF MISCELLANEOUS ITEMS (PIPE)**
80 FT	STA. 6362+49.72, 4.16' LT TO STA. 6362+54.80, 74.95' LT
602-045A	**24" PIPE CULVERT**
102 FT	STA. 6362+49.72, 4.16' LT TO STA. 6362+56.60, 93.60' LT
605-035A	**18" STORM SEWER PIPE**
72 FT	STA. 6365+78.99, 90.03' LT TO STA. 6366+50.75, 90.05' LT
608-205A	**METAL SAFETY APRON (PARALLEL) (18")**
1 EACH	STA. 6365+78.99, 90.03' LT
1 EACH	STA. 6366+50.75, 90.05' LT
609-025A	**MINOR STRUCTURES (24" CONCRETE HEADWALL)**
1 EACH	STA. 6362+56.61, 93.60' LT
624-005A	**LOOSE RIPRAP (CLASS I)**
4.7 CY	STA. 6362+56.61, 93.60' LT
640-010A	**RIPRAP/EROSION CONTROL GEOTEXTILE**
14 SY	STA. 6362+56.61, 93.60' LT
S913-05A	**SP DITCH BERM**
12.7 CY	STA. 6355+20, 2.09' RT
4.9 CY	STA. 6356+85, 87.45' LT
9.2 CY	STA. 6358+95, 3.96' RT
4.9 CY	STA. 6360+10, 87.77' LT
4.9 CY	STA. 6363+35, 96.47' LT

NOTES:

1. SEE SP DITCH BERM DETAIL FOR DITCH BERM DIMENSIONS.
2. IN PHASE 2, REMOVE EXISTING CULVERT, MODIFY INLET OR JUNCTION BOX OPENING TO CONNECT PROPOSED CULVERT AND CONSTRUCT UNDER PHASE 2 ROADWAY.
3. SEE PIPE COVER AND DAYLIGHT DETAILS FOR GRADING INFORMATION.

Scale (Feet)
50 0 50 100

REVISIONS			
NO.	DATE	BY	DESCRIPTION

DESIGNED D. ABEDI	SCALES SHOWN ARE FOR 11" X 17" PRINTS ONLY
DESIGN CHECKED C. MCALISTER	
DETAILED P. CONSALVO	CADD FILE NAME 24149_DrpI_D202D.DGN
DRAWING CHECKED C. MCALISTER	DRAWING DATE: November 21, 2025

IDAHO TRANSPORTATION DEPARTMENT
YOUR Safety→YOUR Mobility→YOUR Economic Opportunity
DAVID EVANS AND ASSOCIATES INC.

PROJECT NO.	DRAINAGE PLAN	ENGLISH
A024(149)	US 20, BONNEVILLE COUNTY LINE TO MP 291 STA. 6355+00 TO STA. 6367+00 PHASE 2	COUNTY BINGHAM/BONNEVILLE KEY NUMBER 24149 SHEET 278 OF 441

NOT APPROVED FOR CONSTRUCTION
INTERMEDIATE

November 21, 2025 4:52:30 PM
pw://itd-pw.bentley.com:itd-pw-01/Documents/District 6/Projects/prj24394/Project_Development/Plan Sheets/Package 2 (KN 24149)/Drainage/24149_DrpI_D202D

T.3N., R.35E., B.M.

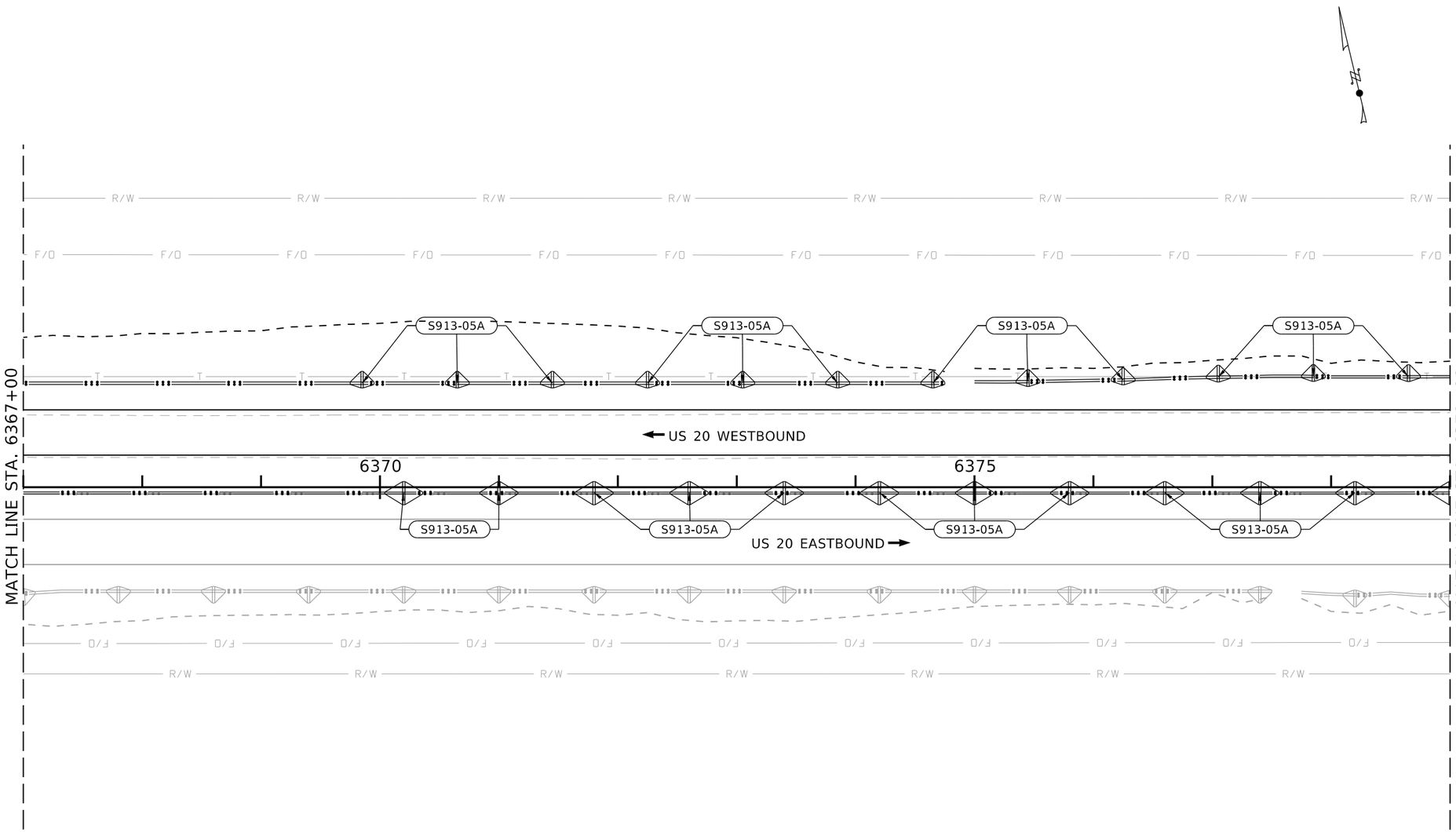

S913-05A	SP DITCH BERM
4.9 CY	STA. 6369+85, 87.45' LT
9.2 CY	STA. 6370+20, 4.41' RT
4.9 CY	STA. 6370+65, 87.45' LT
8.8 CY	STA. 6371+00, 4.41' RT
4.9 CY	STA. 6371+45, 87.45' LT
8.8 CY	STA. 6371+80, 4.41' RT
4.9 CY	STA. 6372+25, 87.45' LT
8.8 CY	STA. 6372+60, 4.41' RT
4.9 CY	STA. 6373+05, 87.45' LT
8.8 CY	STA. 6373+40, 4.41' RT
4.9 CY	STA. 6373+85, 87.45' LT
8.8 CY	STA. 6374+20, 4.41' RT
4.9 CY	STA. 6374+65, 87.45' LT
8.8 CY	STA. 6375+00, 4.41' RT
4.9 CY	STA. 6375+45, 88.82' LT
8.8 CY	STA. 6375+80, 4.41' RT
4.9 CY	STA. 6376+25, 90.15' LT
8.8 CY	STA. 6376+60, 4.41' RT
4.9 CY	STA. 6377+05, 92.50' LT
8.8 CY	STA. 6377+40, 4.41' RT
4.9 CY	STA. 6377+85, 93.11' LT
8.8 CY	STA. 6378+20, 4.41' RT
4.9 CY	STA. 6378+65, 92.95' LT

NOTES:

1. SEE SP DITCH BERM DETAIL FOR DITCH BERM DIMENSIONS.

Scale (Feet)
50 0 50 100

REVISIONS			
NO.	DATE	BY	DESCRIPTION

DESIGNED D. ABEDI
DESIGN CHECKED C. MCALISTER
DETAILED P. CONSALVO
DRAWING CHECKED C. MCALISTER

SCALES SHOWN ARE FOR 11" X 17" PRINTS ONLY
CADD FILE NAME 24149_DrpI_D202D.DGN
DRAWING DATE: November 21, 2025

IDAHO TRANSPORTATION DEPARTMENT
YOUR Safety→YOUR Mobility→YOUR Economic Opportunity
DAVID EVANS AND ASSOCIATES INC.

PROJECT NO. A024(149)

DRAINAGE PLAN
US 20, BONNEVILLE COUNTY
LINE TO MP 291
STA. 6367+00 TO STA. 6379+00
PHASE 2

ENGLISH
COUNTY BINGHAM/BONNEVILLE
KEY NUMBER 24149
SHEET 279 OF 441

NOT APPROVED
INTERMEDIATE
FOR CONSTRUCTION

November 21, 2025 4:52:35 PM
pw://itd-pw.bentley.com:itd-pw-01/Documents/District 6/Projects/prj24394/Project_Development/Plan Sheets/Package 2 (KN 24149)/Drainage/24149_DrpI_D202D

T.3N., R.35E., B.M.

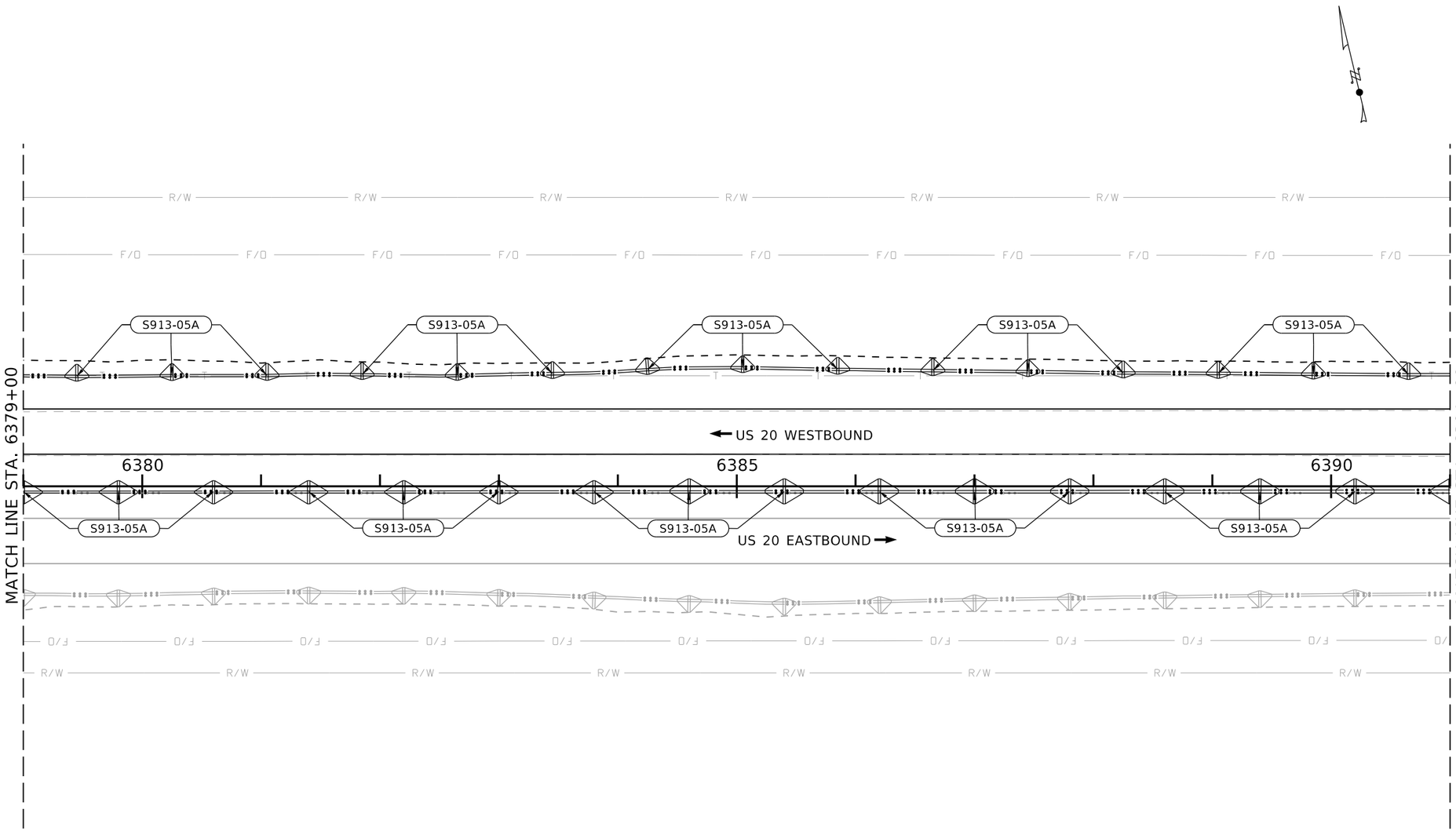

S913-05A	SP DITCH BERM
8.8 CY	STA. 6379+00, 4.41' RT
4.9 CY	STA. 6379+45, 92.50' LT
8.8 CY	STA. 6379+80, 4.41' RT
4.9 CY	STA. 6380+25, 93.09' LT
8.8 CY	STA. 6380+60, 4.41' RT
4.9 CY	STA. 6381+05, 93.19' LT
8.8 CY	STA. 6381+40, 4.41' RT
4.9 CY	STA. 6381+85, 93.91' LT
8.8 CY	STA. 6382+20, 4.41' RT
4.9 CY	STA. 6382+65, 93.15' LT
8.8 CY	STA. 6383+00, 4.41' RT
4.9 CY	STA. 6383+45, 94.75' LT
8.8 CY	STA. 6383+80, 4.41' RT
4.9 CY	STA. 6384+25, 98.09' LT
8.8 CY	STA. 6384+60, 4.41' RT
4.9 CY	STA. 6385+05, 99.68' LT
8.8 CY	STA. 6385+40, 4.41' RT
4.9 CY	STA. 6385+85, 98.34' LT
8.8 CY	STA. 6386+20, 4.41' RT
4.9 CY	STA. 6386+65, 97.28' LT
8.8 CY	STA. 6387+00, 4.41' RT
4.9 CY	STA. 6387+45, 96.40' LT
8.8 CY	STA. 6387+80, 4.41' RT
4.9 CY	STA. 6388+25, 95.31' LT
8.8 CY	STA. 6388+60, 4.41' RT
4.9 CY	STA. 6389+05, 94.92' LT
8.8 CY	STA. 6389+40, 4.41' RT
4.9 CY	STA. 6389+85, 94.29' LT
8.8 CY	STA. 6390+20, 4.41' RT
4.9 CY	STA. 6390+65, 93.86' LT

NOTES:

1. SEE SP DITCH BERM DETAIL FOR DITCH BERM DIMENSIONS.

Scale (Feet)
50 0 50 100

REVISIONS			
NO.	DATE	BY	DESCRIPTION

DESIGNED D. ABEDI
DESIGN CHECKED C. MCALISTER
DETAILED P. CONSALVO
DRAWING CHECKED C. MCALISTER

SCALES SHOWN ARE FOR 11" X 17" PRINTS ONLY
CADD FILE NAME 24149_DrpI_D202D.DGN
DRAWING DATE: November 21, 2025

IDAHO TRANSPORTATION DEPARTMENT
YOUR Safety→YOUR Mobility→YOUR Economic Opportunity
DAVID EVANS AND ASSOCIATES INC.

PROJECT NO. A024(149)

DRAINAGE PLAN
US 20, BONNEVILLE COUNTY
LINE TO MP 291
STA. 6379+00 TO STA. 6391+00
PHASE 2

ENGLISH
COUNTY BINGHAM/BONNEVILLE
KEY NUMBER 24149
SHEET 280 OF 441

NOT APPROVED
INTERMEDIATE
FOR CONSTRUCTION

November 21, 2025 4:52:39 PM
pw://itd-pw.bentley.com:itd-pw-01/Documents/District 6/Projects/prj24394/Project_Development/Plan Sheets/Package 2 (KN 24149)/Drainage/24149_DrpI_D202D

T.3N., R.35E., B.M.

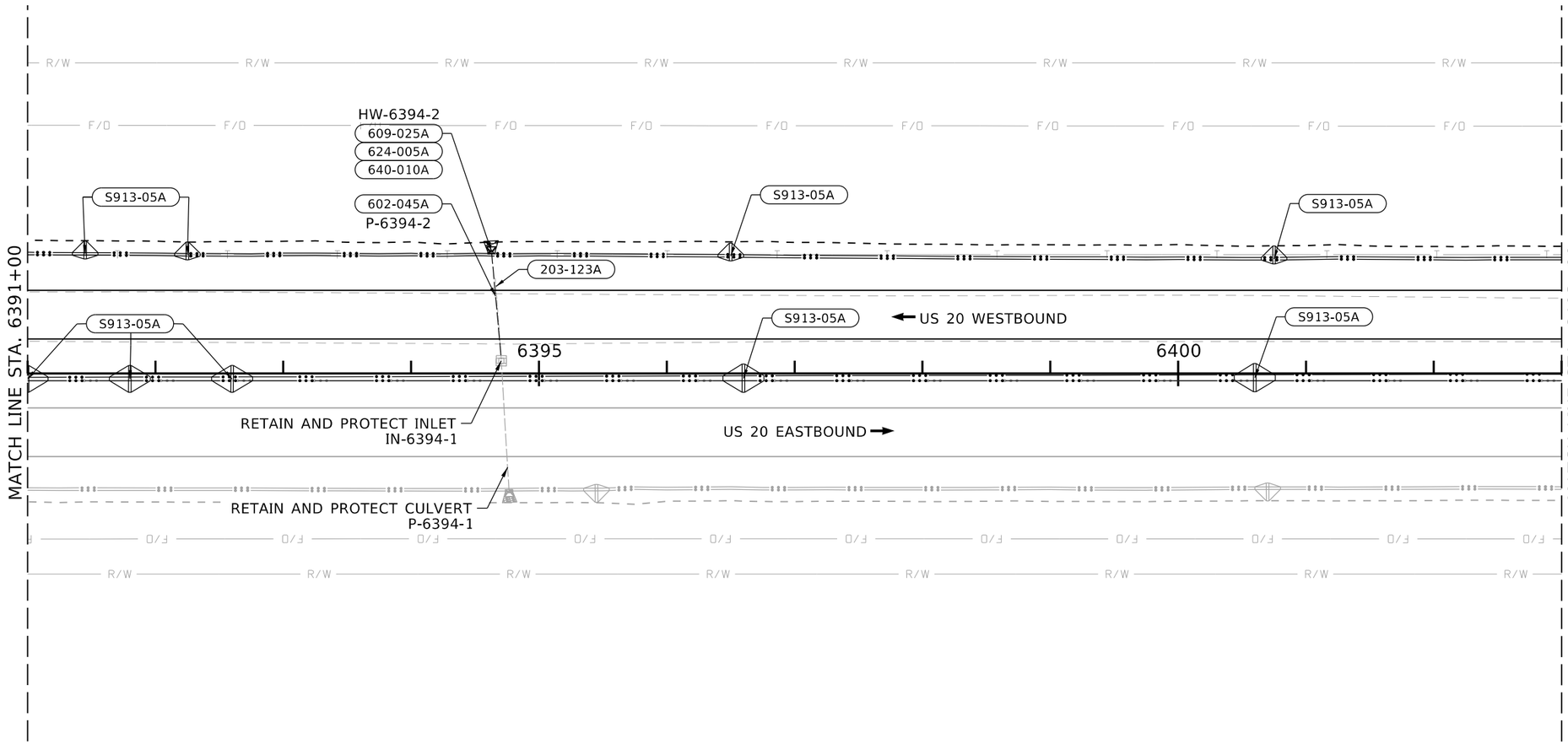

203-123A REMOVAL OF MISCELLANEOUS ITEMS (PIPE)
65 FT — STA. 6394+65.82, 74.81' LT TO STA. 6394+70.58, 10.97' LT

602-045A 24" PIPE CULVERT
83 FT — STA. 6394+63.43, 89.78' LT TO STA. 6394+70.91, 11.05' LT

609-025A MINOR STRUCTURES (24" CONCRETE HEADWALL)
1 EACH — STA. 6394+63.43, 89.78' LT

624-005A LOOSE RIPRAP (CLASS I)
4.7 CY — STA. 6394+63.43, 89.78' LT

640-010A RIPRAP/EROSION CONTROL GEOTEXTILE
14 SY — STA. 6394+63.43, 89.78' LT

S913-05A SP DITCH BERM
8.8 CY — STA. 6391+00, 4.41' RT
4.9 CY — STA. 6391+45, 93.61' LT
8.8 CY — STA. 6391+80, 4.41' RT
4.9 CY — STA. 6392+25, 92.86' LT
8.8 CY — STA. 6392+60, 4.41' RT
4.9 CY — STA. 6396+50, 92.06' LT
7.9 CY — STA. 6396+60, 3.76' RT
10.4 CY — STA. 6400+60, 3.35' RT
4.9 CY — STA. 6400+75, 89.78' LT

NOTES:

1. SEE SP DITCH BERM DETAIL FOR DITCH BERM DIMENSIONS.
2. IN PHASE 2, REMOVE EXISTING CULVERT, MODIFY INLET OR JUNCTION BOX OPENING TO CONNECT PROPOSED CULVERT AND CONSTRUCT UNDER PHASE 2 ROADWAY.
3. SEE PIPE COVER AND DAYLIGHT DETAILS FOR GRADING INFORMATION.

Scale (Feet)
50 0 50 100

REVISIONS			
NO.	DATE	BY	DESCRIPTION

DESIGNED D. ABEDI
DESIGN CHECKED C. MCALISTER
DETAILED P. CONSALVO
DRAWING CHECKED C. MCALISTER

SCALES SHOWN ARE FOR 11" X 17" PRINTS ONLY
CADD FILE NAME 24149_DrpI_D202D.DGN
DRAWING DATE: November 21, 2025

IDAHO TRANSPORTATION DEPARTMENT
YOUR Safety→YOUR Mobility→YOUR Economic Opportunity
DAVID EVANS AND ASSOCIATES INC.

PROJECT NO. A024(149)

DRAINAGE PLAN
US 20, BONNEVILLE COUNTY
LINE TO MP 291
STA. 6391+00 TO STA. 6403+00
PHASE 2

ENGLISH
COUNTY BINGHAM/BONNEVILLE
KEY NUMBER 24149
SHEET 281 OF 441

NOT APPROVED
INTERMEDIATE
FOR CONSTRUCTION

November 21, 2025 4:52:45 PM
pw://itd-pw.bentley.com:itd-pw-01/Documents/District 6/Projects/prj24394/Project_Development/Plan Sheets/Package 2 (KN 24149)/Drainage/24149_DrpI_D202D

T.3N., R.35E., B.M.

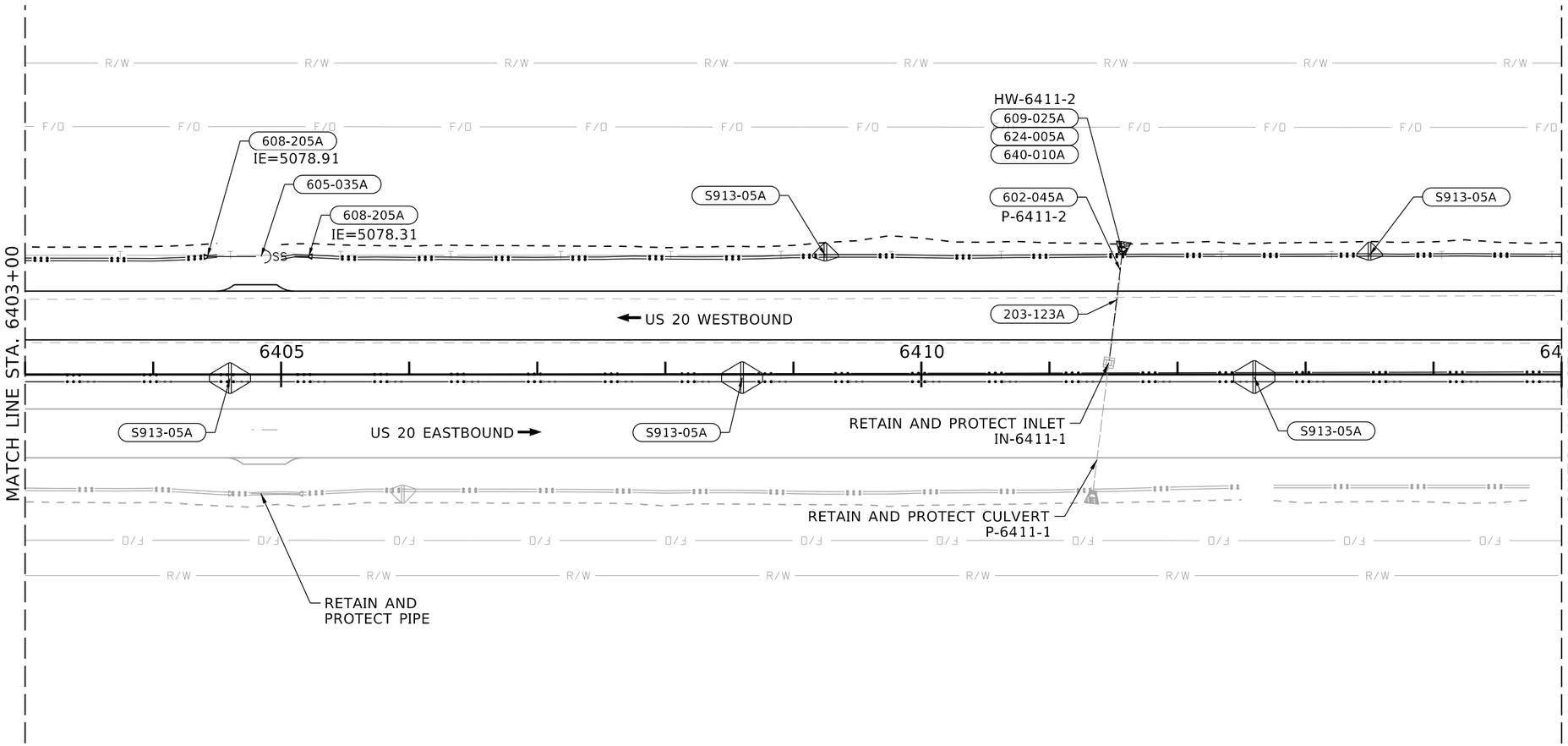

203-123A	**REMOVAL OF MISCELLANEOUS ITEMS (PIPE)**
66 FT	STA. 6411+46.60, 10.12' LT TO STA. 6411+55.33, 75.18' LT
602-045A	**24" PIPE CULVERT**
84 FT	STA. 6411+46.65, 8.91' LT TO STA. 6411+56.93, 95.56' LT
605-035A	**18" STORM SEWER PIPE**
80 FT	STA. 6404+42.40, 91.93' LT TO STA. 6405+21.55, 92.12' LT
608-205A	**METAL SAFETY APRON (PARALLEL) (18")**
1 EACH	STA. 6404+42.40, 91.93' LT
1 EACH	STA. 6405+21.55, 92.12' LT
609-025A	**MINOR STRUCTURES (24" CONCRETE HEADWALL)**
1 EACH	STA. 6411+57.01, 90.01' LT
624-005A	**LOOSE RIPRAP (CLASS I)**
4.7 CY	STA. 6411+57.01, 90.01' LT
640-010A	**RIPRAP/EROSION CONTROL GEOTEXTILE**
14 SY	STA. 6411+57.01, 90.01' LT
S913-05A	**SP DITCH BERM**
11.2 CY	STA. 6404+60, 2.93' RT
11.9 CY	STA. 6408+60, 2.52' RT
4.9 CY	STA. 6409+25, 92.59' LT
12.7 CY	STA. 6412+60, 2.08' RT
4.9 CY	STA. 6413+50, 93.22' LT

NOTES:

1. SEE SP DITCH BERM DETAIL FOR DITCH BERM DIMENSIONS.

2. IN PHASE 2, REMOVE EXISTING CULVERT, MODIFY INLET OR JUNCTION BOX OPENING TO CONNECT PROPOSED CULVERT AND CONSTRUCT UNDER PHASE 2 ROADWAY.

3. SEE PIPE COVER AND DAYLIGHT DETAILS FOR GRADING INFORMATION.

Scale (Feet)
50 0 50 100

REVISIONS			
NO.	DATE	BY	DESCRIPTION

DESIGNED D. ABEDI	SCALES SHOWN ARE FOR 11" X 17" PRINTS ONLY
DESIGN CHECKED C. MCALISTER	
DETAILED P. CONSALVO	CADD FILE NAME 24149_Drpl_D202D.DGN
DRAWING CHECKED C. MCALISTER	DRAWING DATE: November 21, 2025

IDAHO TRANSPORTATION DEPARTMENT
YOUR Safety→YOUR Mobility→YOUR Economic Opportunity
DAVID EVANS AND ASSOCIATES INC.

PROJECT NO.	DRAINAGE PLAN
A024(149)	US 20, BONNEVILLE COUNTY LINE TO MP 291 STA. 6403+00 TO STA. 6415+00 PHASE 2

ENGLISH

COUNTY BINGHAM/BONNEVILLE

KEY NUMBER 24149

SHEET 282 OF 441

NOT APPROVED
INTERMEDIATE
FOR CONSTRUCTION

November 21, 2025 4:52:50 PM
pw://itd-pw.bentley.com:itd-pw-01/Documents/District 6/Projects/prj24394/Project_Development/Plan Sheets/Package 2 (KN 24149)/Drainage/24149_Drpl_D202D

T.3N., R.35E., B.M.

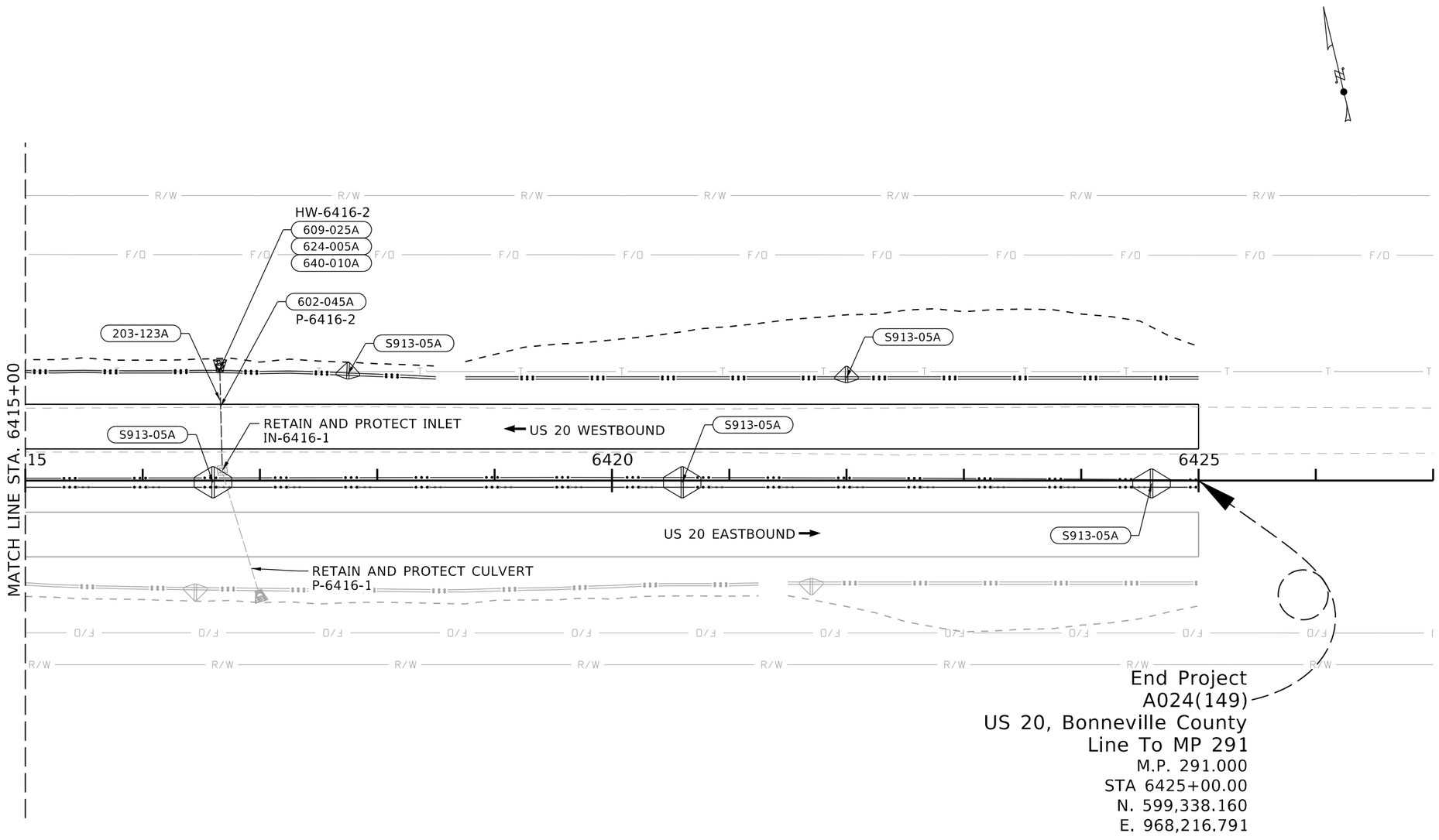

203-123A	**REMOVAL OF MISCELLANEOUS ITEMS (PIPE)**
65 FT	STA. 6416+65.65, 74.09' LT TO STA. 6416+67.89, 10.10' LT
602-045A	**24" PIPE CULVERT**
85 FT	STA. 6416+65.80, 94.90' LT TO STA. 6416+67.86, 10.15' LT
609-025A	**MINOR STRUCTURES (24" CONCRETE HEADWALL)**
1 EACH	STA. 6416+65.71, 89.06' LT
624-005A	**LOOSE RIPRAP (CLASS I)**
4.7 CY	STA. 6416+65.71, 89.06' LT
640-010A	**RIPRAP/EROSION CONTROL GEOTEXTILE**
14 SY	STA. 6416+65.71, 89.06' LT
S913-05A	**SP DITCH BERM**
13.5 CY	STA. 6416+60, 1.69' RT
4.9 CY	STA. 6417+75, 90.64' LT
13.5 CY	STA. 6420+60, 1.69' RT
4.9 CY	STA. 6422+00, 87.45' LT
12.1 CY	STA. 6424+60, 2.43' RT

NOTES:

1. SEE SP DITCH BERM DETAIL FOR DITCH BERM DIMENSIONS.
2. IN PHASE 2, REMOVE EXISTING CULVERT, MODIFY INLET OR JUNCTION BOX OPENING TO CONNECT PROPOSED CULVERT AND CONSTRUCT UNDER PHASE 2 ROADWAY.
3. SEE PIPE COVER AND DAYLIGHT DETAILS FOR GRADING INFORMATION.

Scale (Feet)
50 0 50 100

REVISIONS			
NO.	DATE	BY	DESCRIPTION

DESIGNED D. ABEDI	SCALES SHOWN ARE FOR 11" X 17" PRINTS ONLY	IDAHO TRANSPORTATION DEPARTMENT YOUR Safety→YOUR Mobility→YOUR Economic Opportunity DAVID EVANS AND ASSOCIATES INC.
DESIGN CHECKED C. MCALISTER		
DETAILED P. CONSALVO	CADD FILE NAME 24149_DrpI_D202D.DGN	
DRAWING CHECKED C. MCALISTER	DRAWING DATE: November 21, 2025	

PROJECT NO.	DRAINAGE PLAN	
A024(149)	US 20, BONNEVILLE COUNTY LINE TO MP 291 STA. 6415+00 TO STA. 6427+00 PHASE 2	*ENGLISH* COUNTY BINGHAM/BONNEVILLE KEY NUMBER 24149 SHEET 283 OF 441

NOT APPROVED
INTERMEDIATE
FOR CONSTRUCTION

November 25, 2025 9:52:36 AM
pw://itd-pw.bentley.com:itd-pw-01/Documents/District 6/Projects/prj24394/Project_Development/Plan Sheets/Package 2 (KN 24149)/Drainage/24149_DrpI_D202D

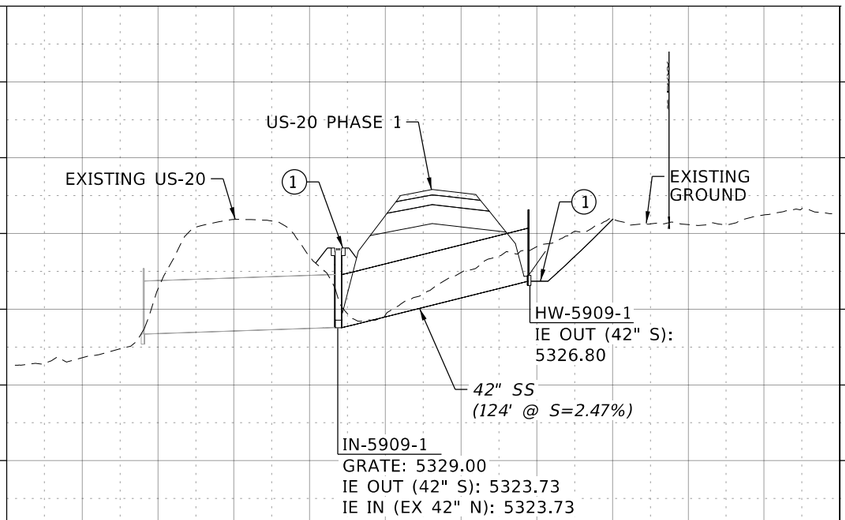

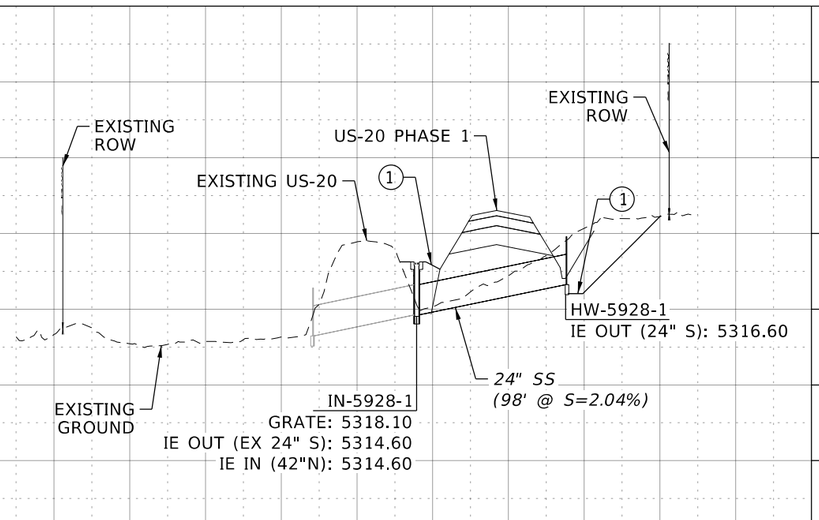

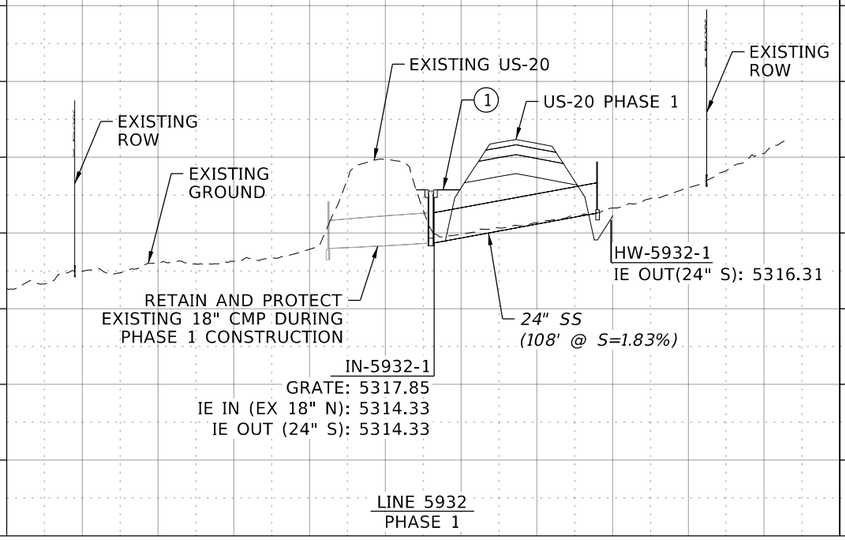

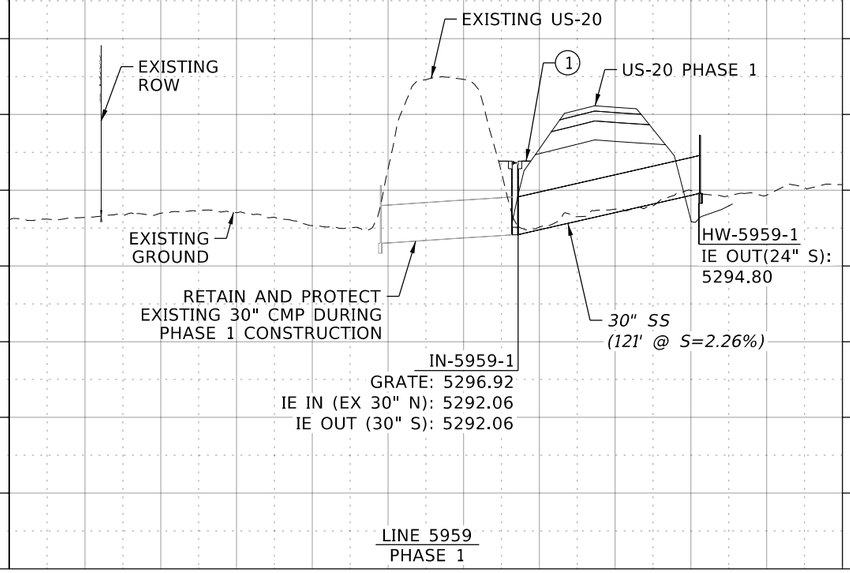

NOTE:

① SEE PIPE AND DRAINAGE STRUCTURE COVER DETAILS.

REVISIONS			
NO.	DATE	BY	DESCRIPTION

DESIGNED D. ABEDI	SCALES SHOWN ARE FOR 11" X 17" PRINTS ONLY	IDAHO TRANSPORTATION DEPARTMENT	PROJECT NO.
DESIGN CHECKED C. MCALISTER		YOUR Safety→YOUR Mobility→YOUR Economic Opportunity	A024(149)
DETAILED P. CONSALVO	CADD FILE NAME 24149_Drpr_D201.DGN	DAVID EVANS AND ASSOCIATES INC.	
DRAWING CHECKED C. MCALISTER	DRAWING DATE: November 21, 2025		

DRAINAGE PROFILE	ENGLISH
US 20, BONNEVILLE COUNTY LINE TO MP 291 PHASE 1	COUNTY BINGHAM/BONNEVILLE KEY NUMBER 24149 SHEET 284 OF 441

NOT APPROVED
INTERMEDIATE
FOR CONSTRUCTION

November 21, 2025 4:53:14 PM
pw://itd-pw.bentley.com:itd-pw-01/Documents/District 6/Projects/prj24394/Project_Development/Plan Sheets/Package 2 (KN 24149)/Drainage/24149_Drpr_D201.DGN

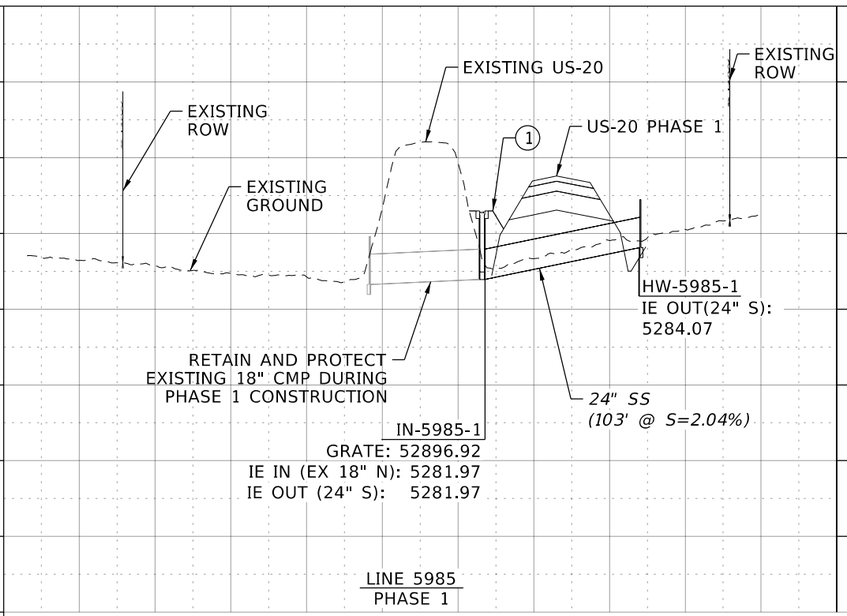

LINE 5985
PHASE 1

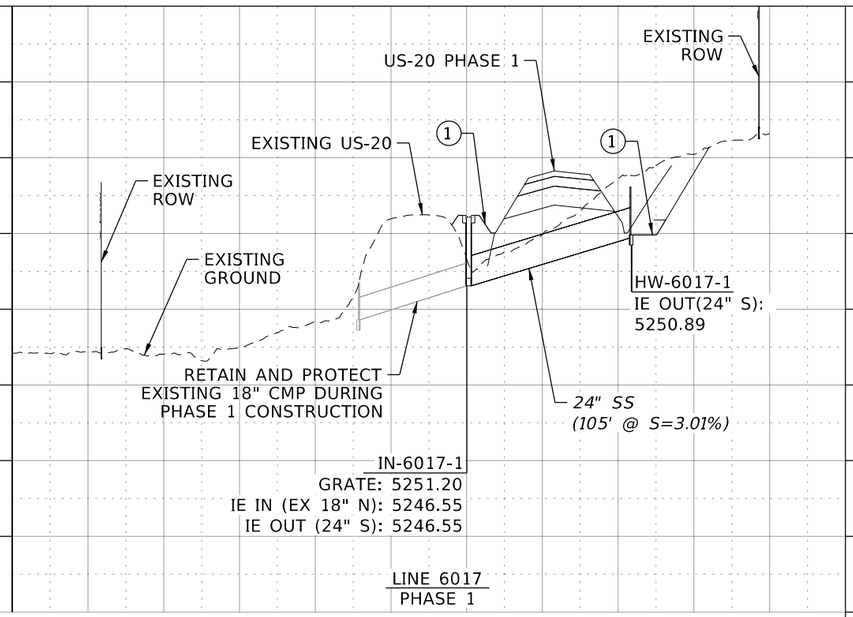

LINE 6017
PHASE 1

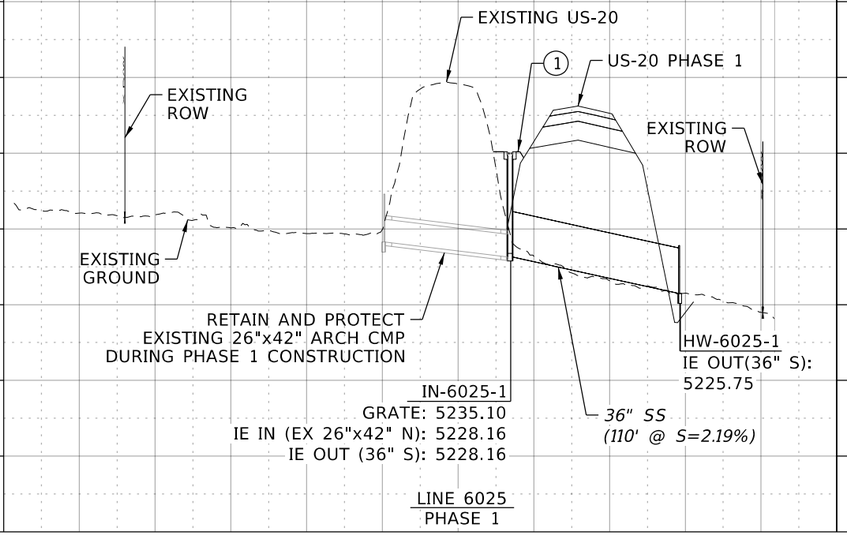

LINE 6025
PHASE 1

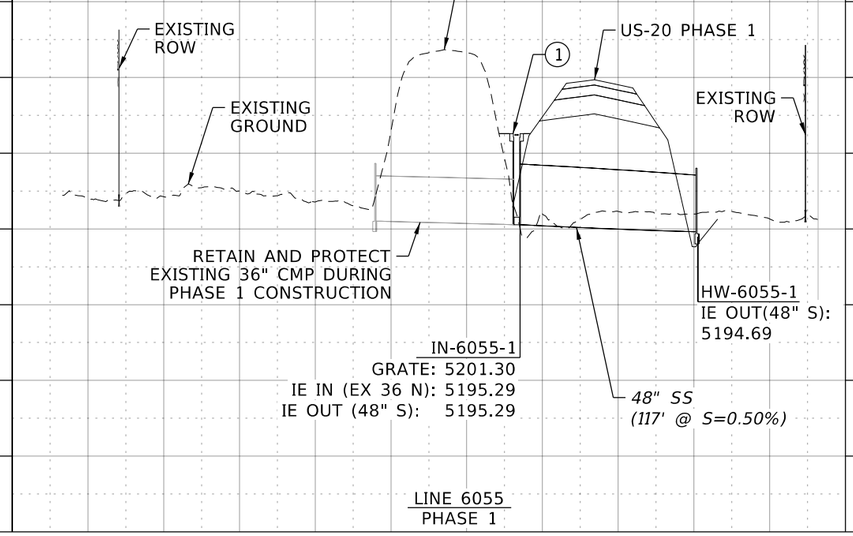

LINE 6055
PHASE 1

NOTE:

① SEE PIPE AND DRAINAGE STRUCTURE COVER DETAILS.

REVISIONS				DESIGNED	SCALES SHOWN	IDAHO TRANSPORTATION DEPARTMENT	PROJECT NO.	DRAINAGE PROFILE	ENGLISH
NO.	DATE	BY	DESCRIPTION	D. ABEDI	ARE FOR 11" X 17" PRINTS ONLY		A024(149)	US 20, BONNEVILLE COUNTY LINE TO MP 291 PHASE 1	COUNTY BINGHAM/BONNEVILLE
				DESIGN CHECKED C. MCALISTER	CADD FILE NAME 24149_Drpr_D202.DGN	YOUR Safety→YOUR Mobility→YOUR Economic Opportunity			KEY NUMBER 24149
				DETAILED P. CONSALVO	DRAWING DATE: November 21, 2025	DAVID EVANS AND ASSOCIATES INC.			SHEET 285 OF 441
				DRAWING CHECKED C. MCALISTER					

NOT APPROVED
INTERMEDIATE
FOR CONSTRUCTION

November 21, 2025 4:53:30 PM
pw://itd-pw.bentley.com:itd-pw-01/Documents/District 6/Projects/prj24394/Project_Development/Plan Sheets/Package 2 (KN 24149)/Drainage/24149_Drpr_D202.DGN

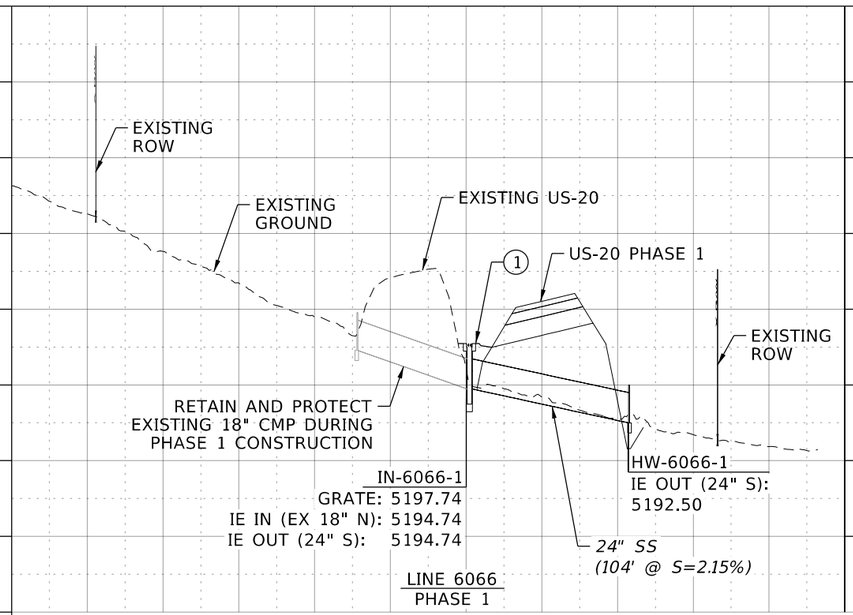

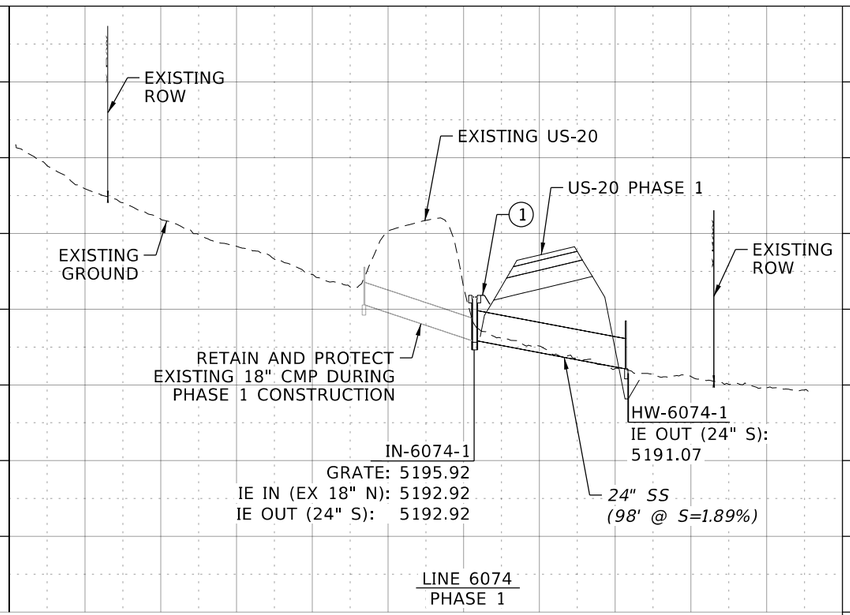

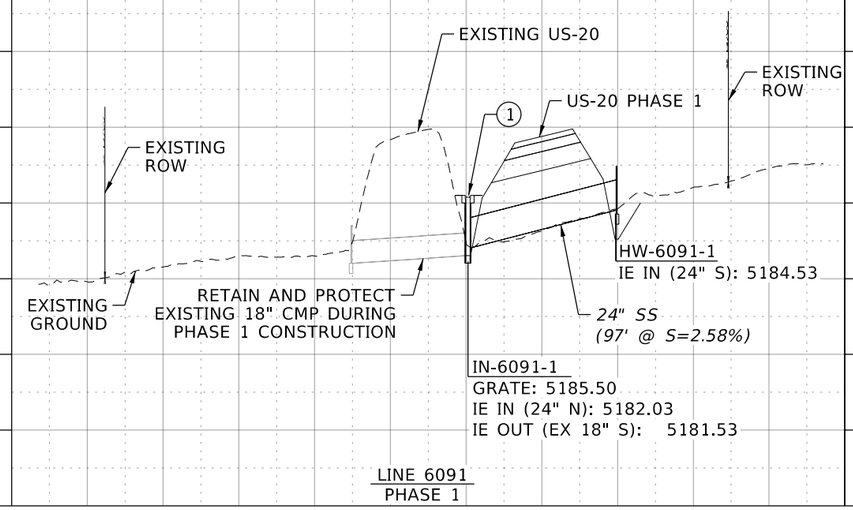

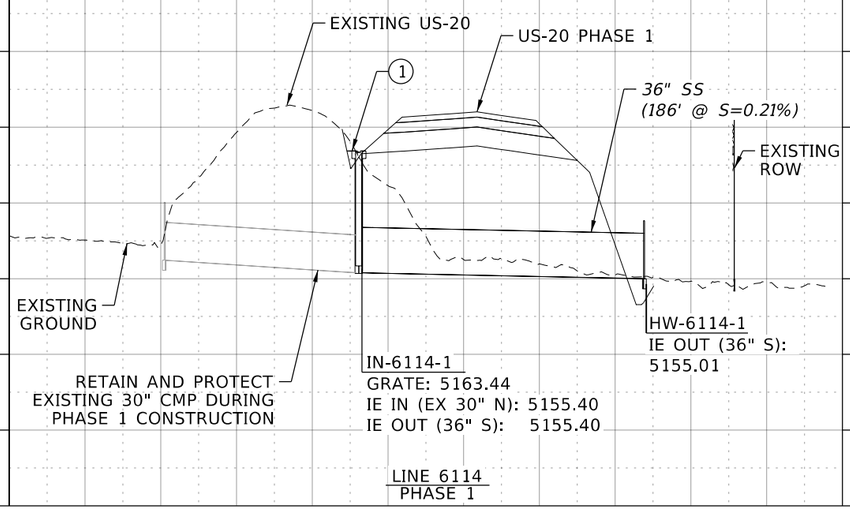

NOTE:

① SEE PIPE AND DRAINAGE STRUCTURE COVER DETAILS.

REVISIONS			
NO.	DATE	BY	DESCRIPTION

DESIGNED	D. ABEDI
DESIGN CHECKED	C. MCALISTER
DETAILED	P. CONSALVO
DRAWING CHECKED	C. MCALISTER

SCALES SHOWN ARE FOR 11" X 17" PRINTS ONLY

CADD FILE NAME: 24149_Drpr_D204.DGN

DRAWING DATE: November 21, 2025

IDAHO TRANSPORTATION DEPARTMENT
YOUR Safety→YOUR Mobility→YOUR Economic Opportunity

DAVID EVANS AND ASSOCIATES INC.

PROJECT NO.: A024(149)

DRAINAGE PROFILE: US 20, BONNEVILLE COUNTY LINE TO MP 291 PHASE 1

ENGLISH

COUNTY: BINGHAM/BONNEVILLE

KEY NUMBER: 24149

SHEET 286 OF 441

NOT APPROVED FOR INTERMEDIATE CONSTRUCTION

November 21, 2025 4:53:40 PM
pw://itd-pw.bentley.com:itd-pw-01/Documents/District 6/Projects/prj24394/Project_Development/Plan Sheets/Package 2 (KN 24149)/Drainage/24149_Drpr_D204.DGN

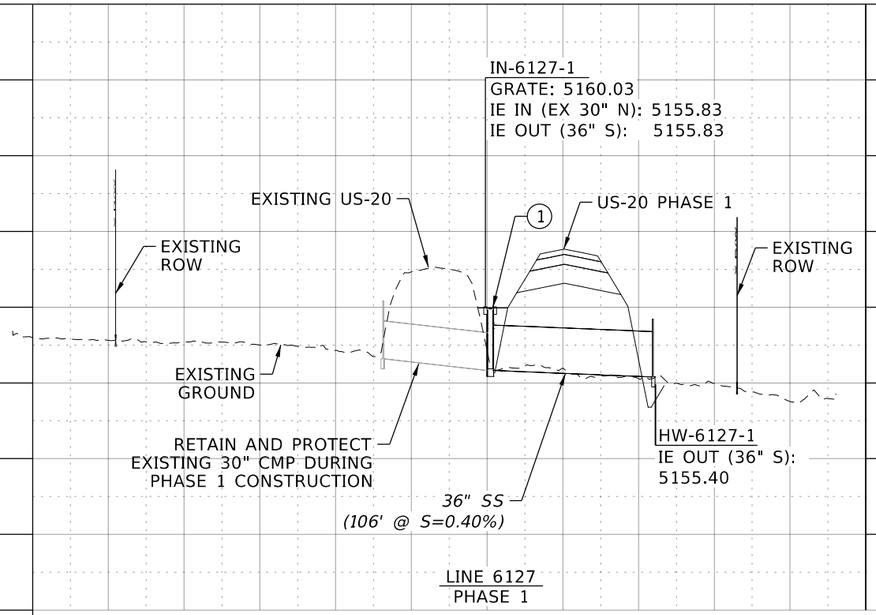

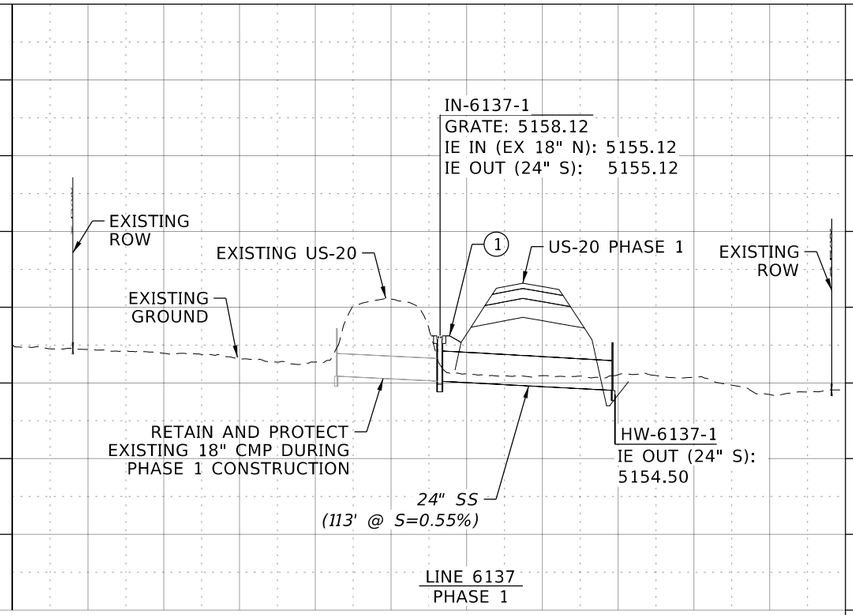

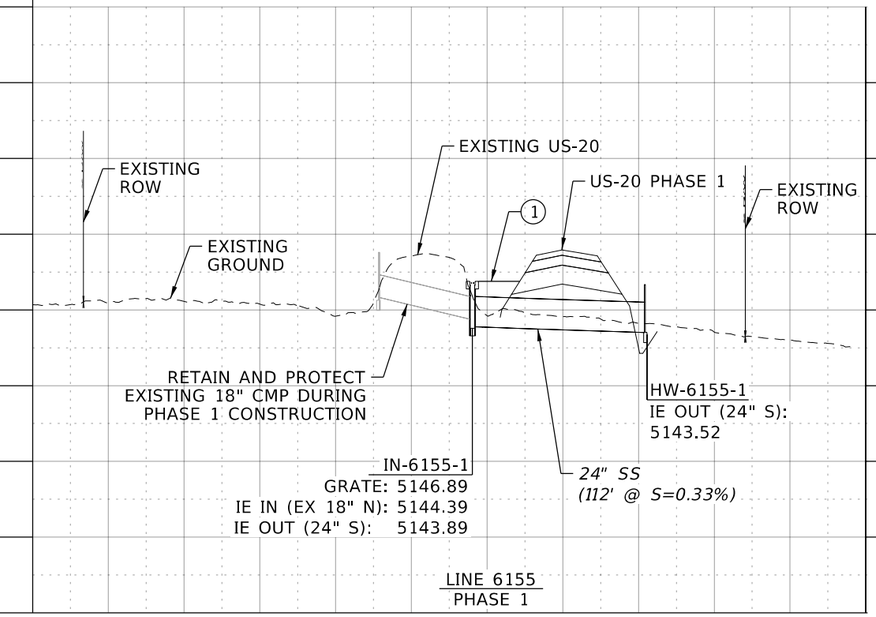

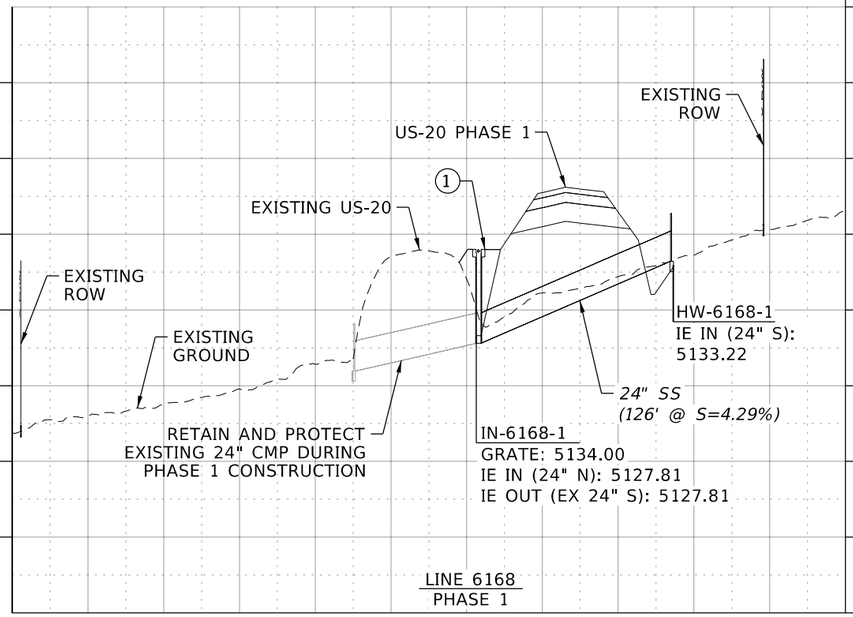

NOTE:

① SEE PIPE AND DRAINAGE STRUCTURE COVER DETAILS.

REVISIONS			
NO.	DATE	BY	DESCRIPTION

DESIGNED	D. ABEDI
DESIGN CHECKED	C. MCALISTER
DETAILED	P. CONSALVO
DRAWING CHECKED	C. MCALISTER

SCALES SHOWN ARE FOR 11" X 17" PRINTS ONLY

CADD FILE NAME: 24149_Drpr_D205.DGN

DRAWING DATE: November 21, 2025

IDAHO TRANSPORTATION DEPARTMENT

YOUR Safety→YOUR Mobility→YOUR Economic Opportunity

DAVID EVANS AND ASSOCIATES INC.

PROJECT NO.: A024(149)

DRAINAGE PROFILE: US 20, BONNEVILLE COUNTY LINE TO MP 291 PHASE 1

ENGLISH

COUNTY: BINGHAM/BONNEVILLE

KEY NUMBER: 24149

SHEET 287 OF 441

NOT APPROVED FOR INTERMEDIATE CONSTRUCTION

November 21, 2025 4:53:50 PM
pw://itd-pw.bentley.com:itd-pw-01/Documents/District 6/Projects/prj24394/Project_Development/Plan Sheets/Package 2 (KN 24149)/Drainage/24149_Drpr_D205.DGN

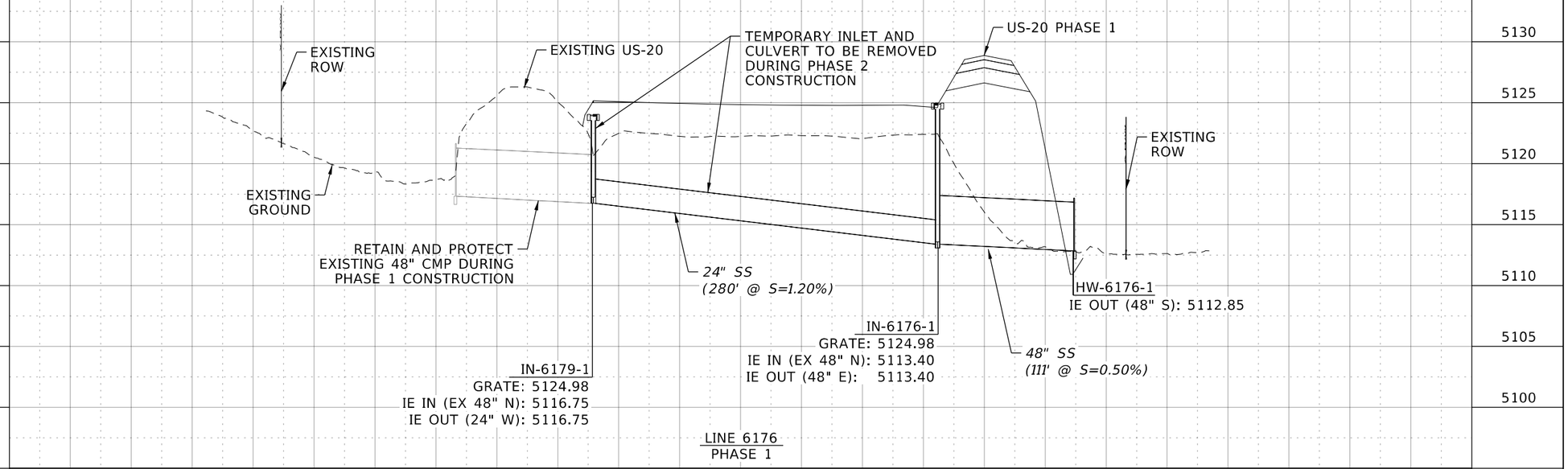

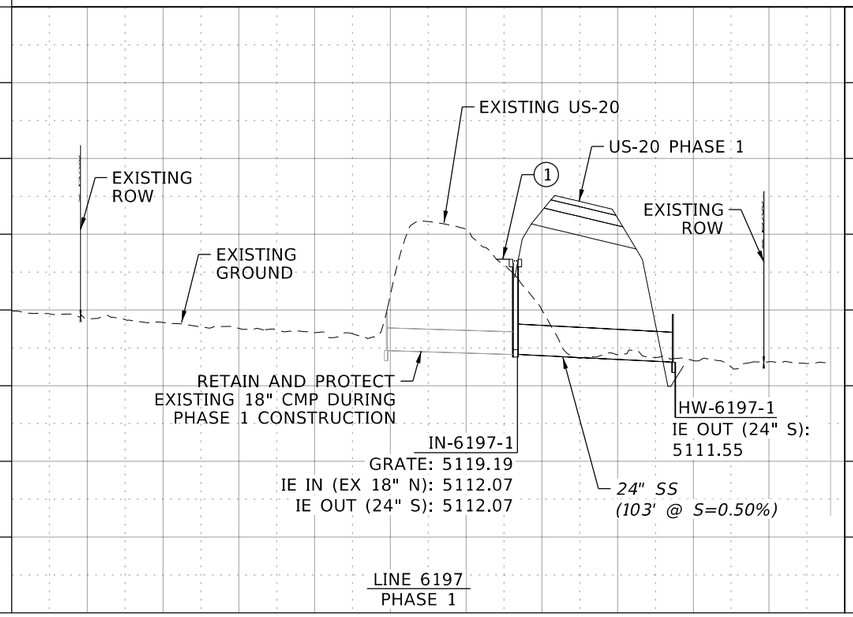

NOTE:

① SEE PIPE AND DRAINAGE STRUCTURE COVER DETAILS.

REVISIONS			
NO.	DATE	BY	DESCRIPTION

DESIGNED D. ABEDI	SCALES SHOWN ARE FOR 11" X 17" PRINTS ONLY	IDAHO TRANSPORTATION DEPARTMENT YOUR Safety→YOUR Mobility→YOUR Economic Opportunity DAVID EVANS AND ASSOCIATES INC.
DESIGN CHECKED C. MCALISTER		
DETAILED P. CONSALVO	CADD FILE NAME 24149_Drpr_D206.DGN	
DRAWING CHECKED C. MCALISTER	DRAWING DATE: November 21, 2025	

PROJECT NO.	DRAINAGE PROFILE	ENGLISH
A024(149)	US 20, BONNEVILLE COUNTY LINE TO MP 291 PHASE 1	COUNTY BINGHAM/BONNEVILLE KEY NUMBER 24149 SHEET 288 OF 441

NOT APPROVED FOR INTERMEDIATE CONSTRUCTION

November 21, 2025 4:54:00 PM
pw://itd-pw.bentley.com:itd-pw-01/Documents/District 6/Projects/prj24394/Project_Development/Plan Sheets/Package 2 (KN 24149)/Drainage/24149_Drpr_D206.DGN

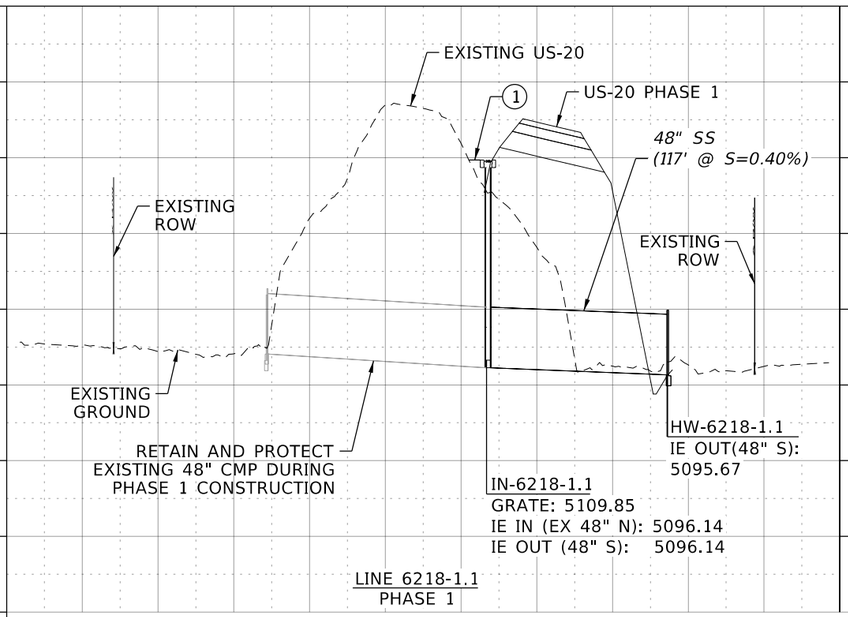

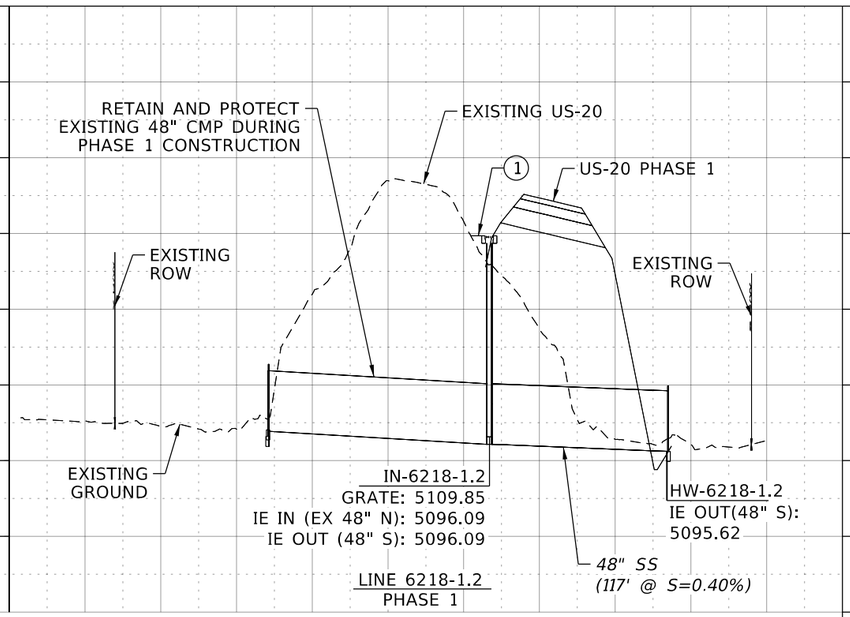

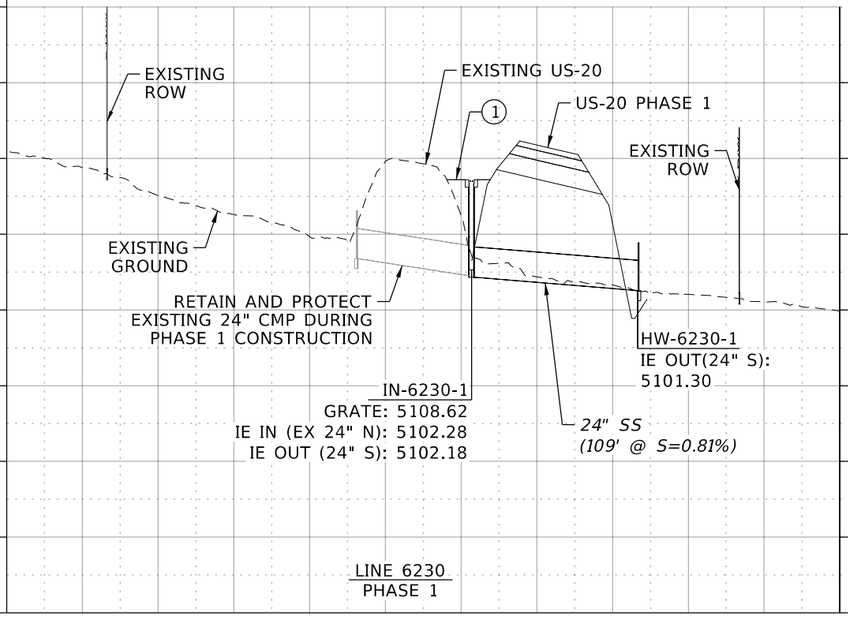

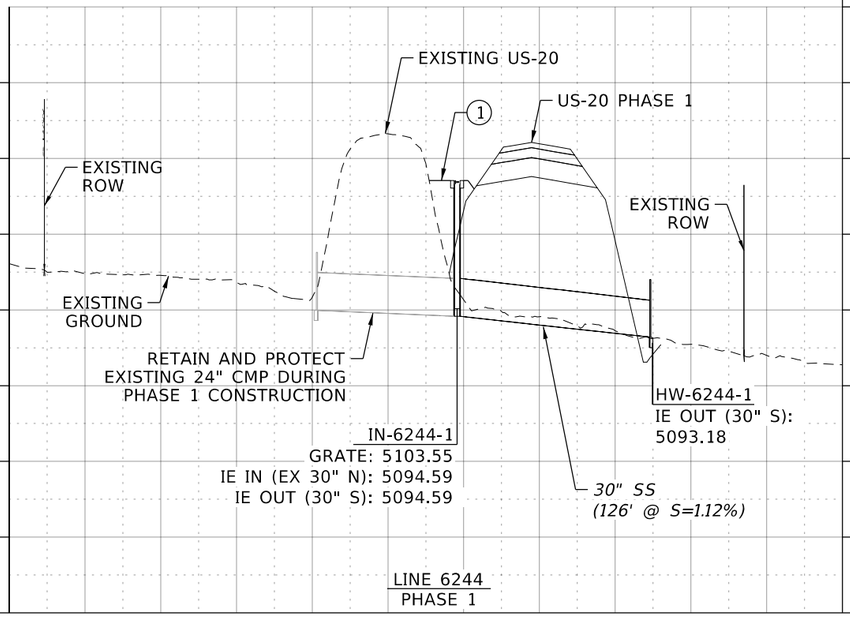

NOTE:

① SEE PIPE AND DRAINAGE STRUCTURE COVER DETAILS.

REVISIONS			
NO.	DATE	BY	DESCRIPTION

DESIGNED	D. ABEDI
DESIGN CHECKED	C. MCALISTER
DETAILED	P. CONSALVO
DRAWING CHECKED	C. MCALISTER

SCALES SHOWN ARE FOR 11" X 17" PRINTS ONLY

CADD FILE NAME: 24149_Drpr_D207.DGN

DRAWING DATE: November 21, 2025

IDAHO TRANSPORTATION DEPARTMENT

YOUR Safety→YOUR Mobility→YOUR Economic Opportunity

DAVID EVANS AND ASSOCIATES INC.

PROJECT NO.: A024(149)

DRAINAGE PROFILE: US 20, BONNEVILLE COUNTY LINE TO MP 291 PHASE 1

ENGLISH

COUNTY: BINGHAM/BONNEVILLE

KEY NUMBER: 24149

SHEET 289 OF 441

NOT APPROVED FOR INTERMEDIATE CONSTRUCTION

November 21, 2025 4:54:17 PM
pw://itd-pw.bentley.com:itd-pw-01/Documents/District 6/Projects/prj24394/Project_Development/Plan Sheets/Package 2 (KN 24149)/Drainage/24149_Drpr_D207.DGN

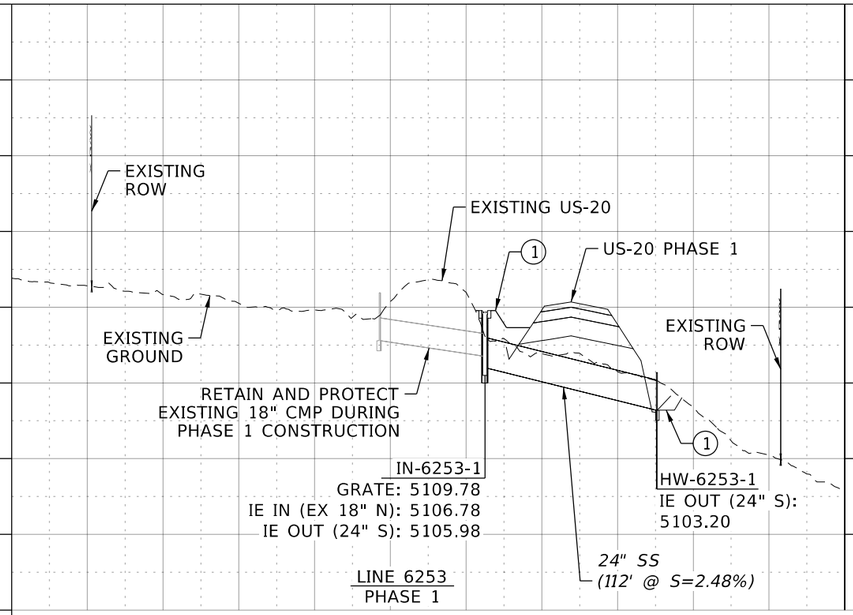

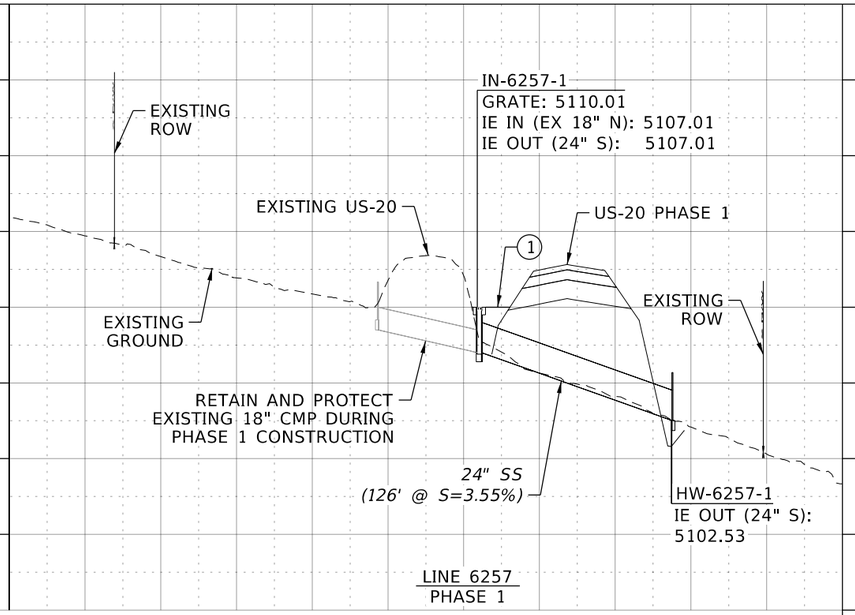

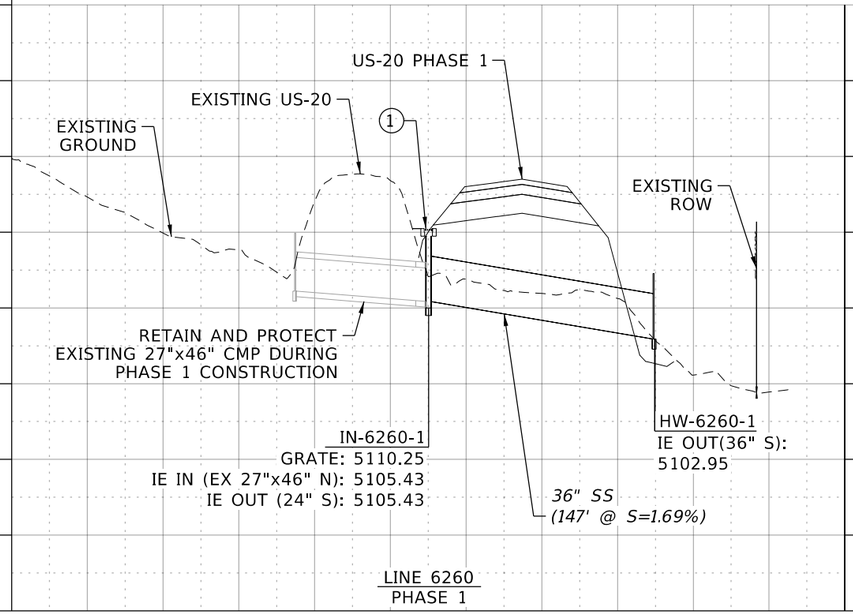

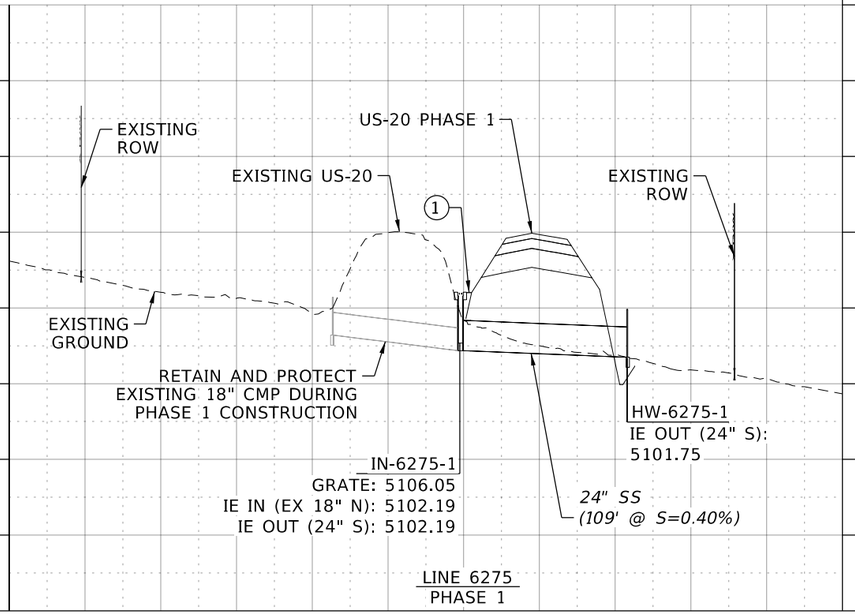

NOTE:

① SEE PIPE AND DRAINAGE STRUCTURE COVER DETAILS.

REVISIONS			
NO.	DATE	BY	DESCRIPTION

DESIGNED D. ABEDI	SCALES SHOWN ARE FOR 11" X 17" PRINTS ONLY	IDAHO TRANSPORTATION DEPARTMENT YOUR Safety→YOUR Mobility→YOUR Economic Opportunity DAVID EVANS AND ASSOCIATES INC.
DESIGN CHECKED C. MCALISTER		
DETAILED P. CONSALVO	CADD FILE NAME 24149_Drpr_D208.DGN	
DRAWING CHECKED C. MCALISTER	DRAWING DATE: November 21, 2025	

PROJECT NO.	DRAINAGE PROFILE	ENGLISH
A024(149)	US 20, BONNEVILLE COUNTY LINE TO MP 291 PHASE 1	COUNTY BINGHAM/BONNEVILLE KEY NUMBER 24149 SHEET 290 OF 441

NOT APPROVED
INTERMEDIATE
FOR CONSTRUCTION

November 21, 2025 4:54:32 PM
pw://itd-pw.bentley.com:itd-pw-01/Documents/District 6/Projects/prj24394/Project_Development/Plan Sheets/Package 2 (KN 24149)/Drainage/24149_Drpr_D208.DGN

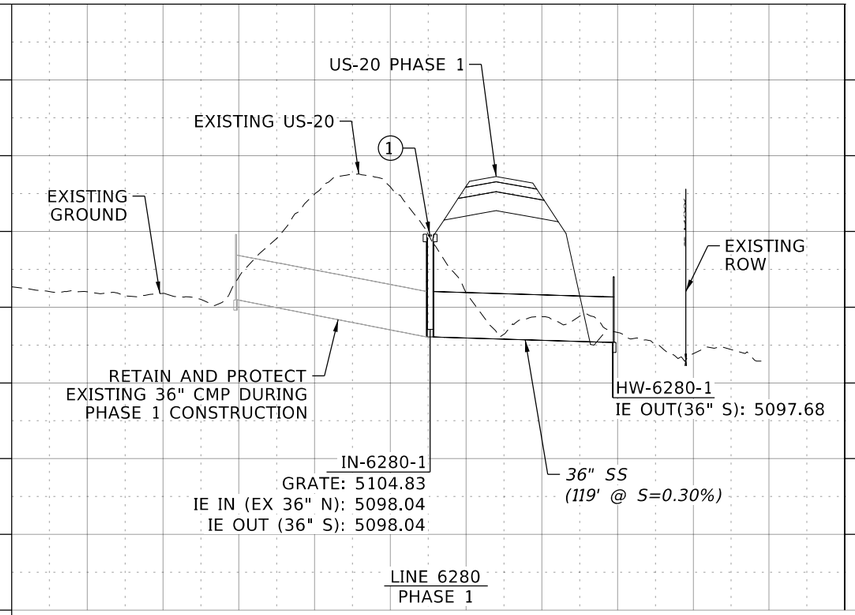

LINE 6280
PHASE 1

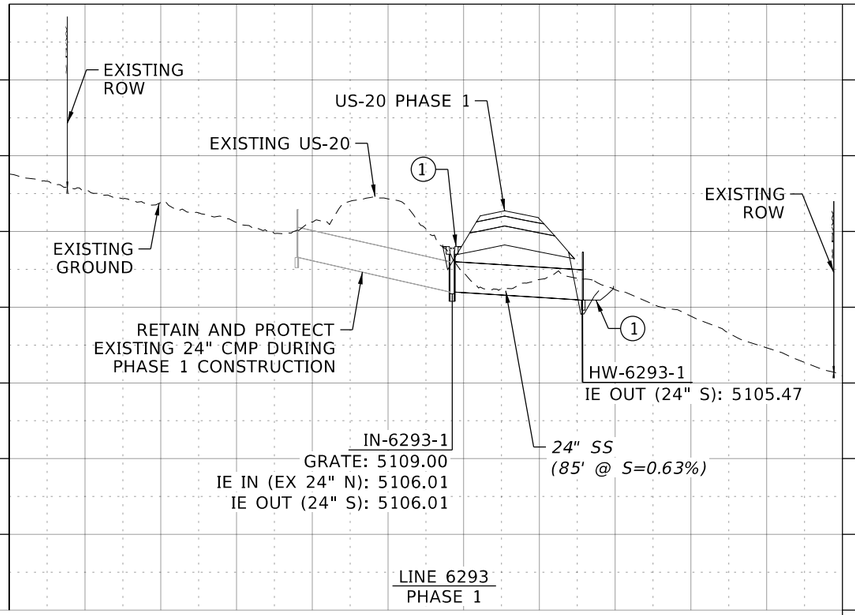

LINE 6293
PHASE 1

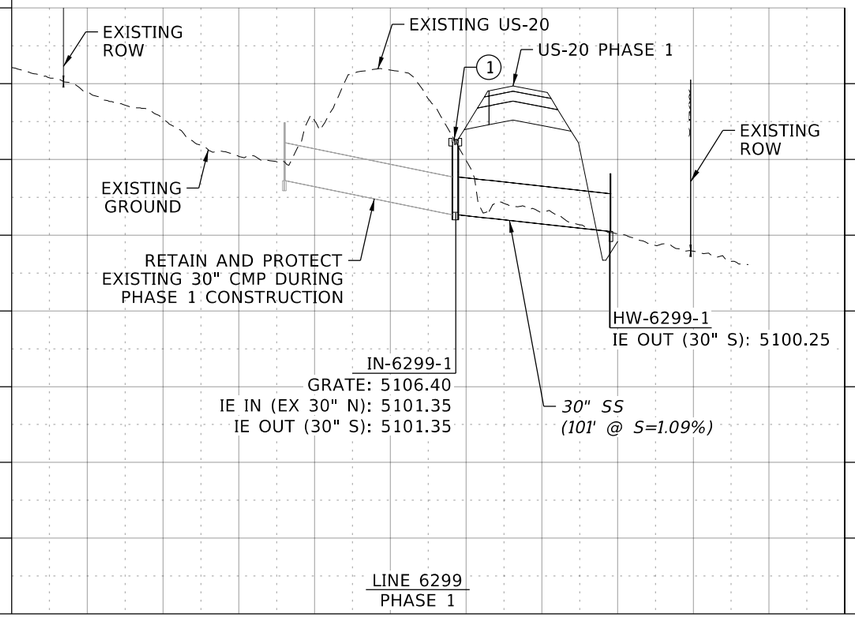

LINE 6299
PHASE 1

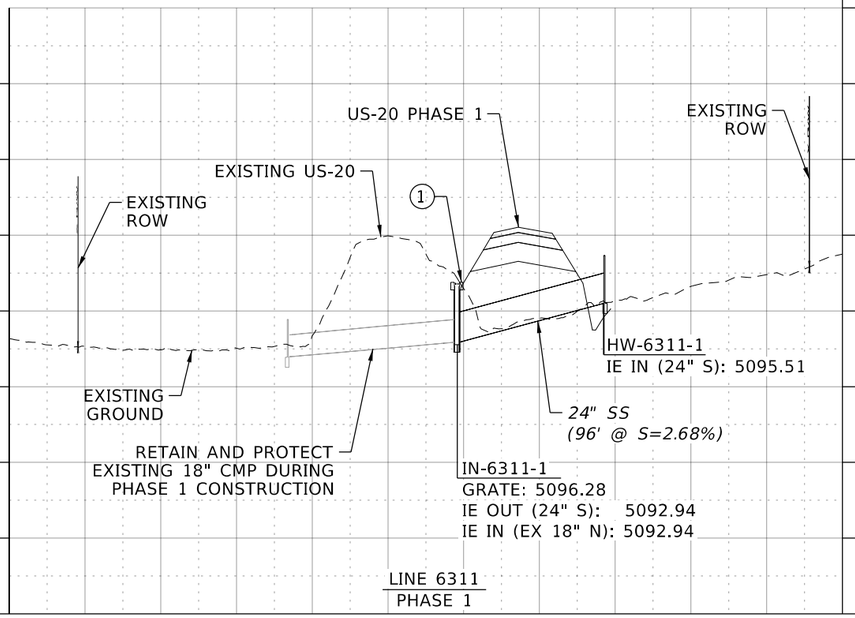

LINE 6311
PHASE 1

NOTE:

① SEE PIPE AND DRAINAGE STRUCTURE COVER DETAILS.

REVISIONS			
NO.	DATE	BY	DESCRIPTION

DESIGNED	D. ABEDI
DESIGN CHECKED	C. MCALISTER
DETAILED	P. CONSALVO
DRAWING CHECKED	C. MCALISTER

SCALES SHOWN ARE FOR 11" X 17" PRINTS ONLY

CADD FILE NAME
24149_Drpr_D209.DGN

DRAWING DATE:
November 21, 2025

IDAHO TRANSPORTATION DEPARTMENT
YOUR Safety→YOUR Mobility→YOUR Economic Opportunity

DAVID EVANS AND ASSOCIATES INC.

PROJECT NO.
A024(149)

DRAINAGE PROFILE
US 20, BONNEVILLE COUNTY
LINE TO MP 291
PHASE 1

ENGLISH

COUNTY
BINGHAM/BONNEVILLE

KEY NUMBER
24149

SHEET 291 OF 441

NOT APPROVED
INTERMEDIATE
FOR CONSTRUCTION

November 21, 2025 4:54:48 PM
pw://itd-pw.bentley.com:itd-pw-01/Documents/District 6/Projects/prj24394/Project_Development/Plan Sheets/Package 2 (KN 24149)/Drainage/24149_Drpr_D209.DGN

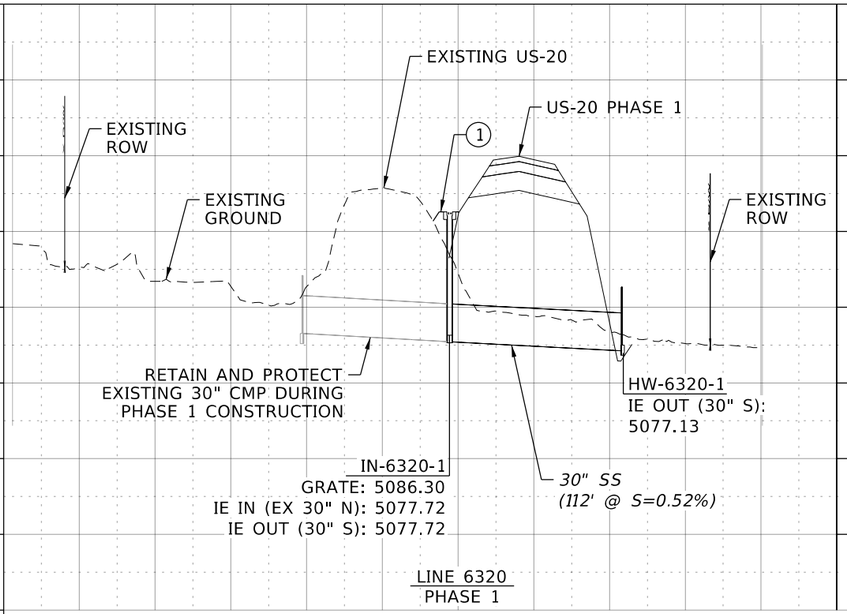

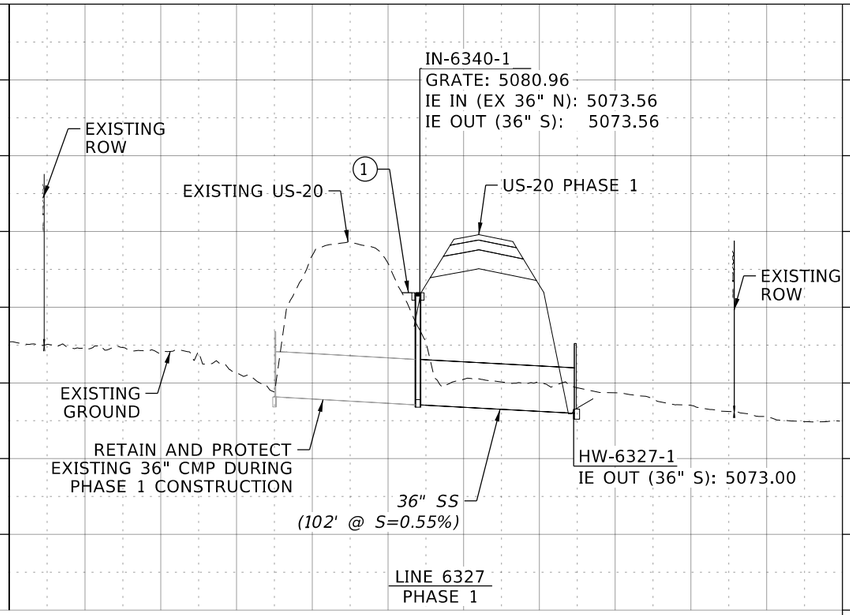

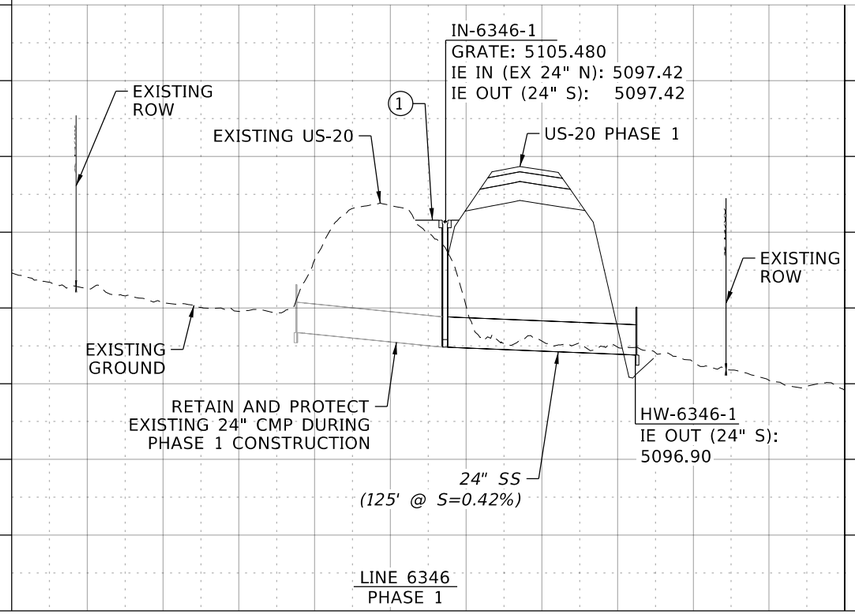

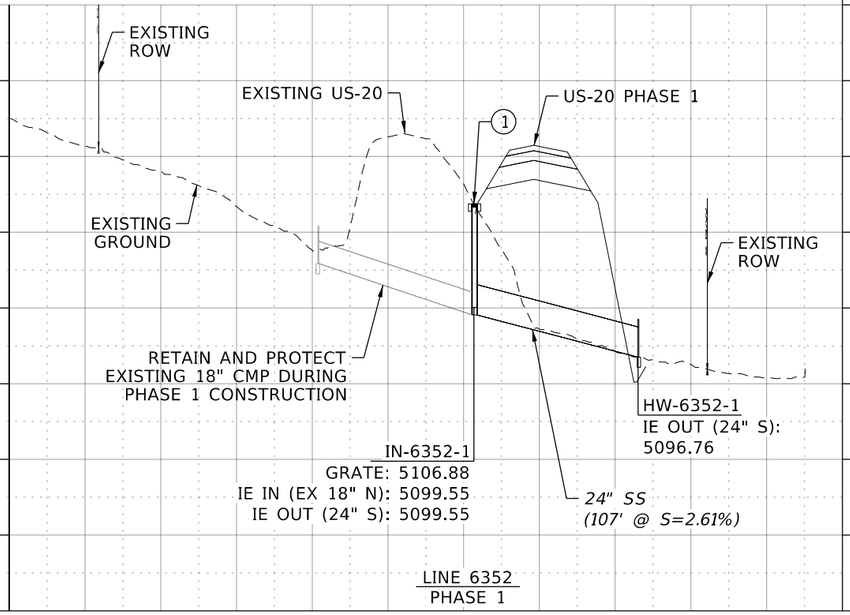

NOTE:

① SEE PIPE AND DRAINAGE STRUCTURE COVER DETAILS.

REVISIONS			
NO.	DATE	BY	DESCRIPTION

DESIGNED	D. ABEDI
DESIGN CHECKED	C. MCALISTER
DETAILED	P. CONSALVO
DRAWING CHECKED	C. MCALISTER

SCALES SHOWN ARE FOR 11" X 17" PRINTS ONLY

CADD FILE NAME 24149_Drpr_D210.DGN

DRAWING DATE: November 21, 2025

IDAHO TRANSPORTATION DEPARTMENT

YOUR Safety→YOUR Mobility→YOUR Economic Opportunity

DAVID EVANS AND ASSOCIATES INC.

PROJECT NO. A024(149)

DRAINAGE PROFILE

US 20, BONNEVILLE COUNTY
LINE TO MP 291
PHASE 1

ENGLISH

COUNTY BINGHAM/BONNEVILLE

KEY NUMBER 24149

SHEET 292 OF 441

NOT APPROVED FOR CONSTRUCTION
INTERMEDIATE

November 21, 2025 4:55:01 PM
pw://itd-pw.bentley.com:itd-pw-01/Documents/District 6/Projects/pr24394/Project_Development/Plan Sheets/Package 2 (KN 24149)/Drainage/24149_Drpr_D210.DGN

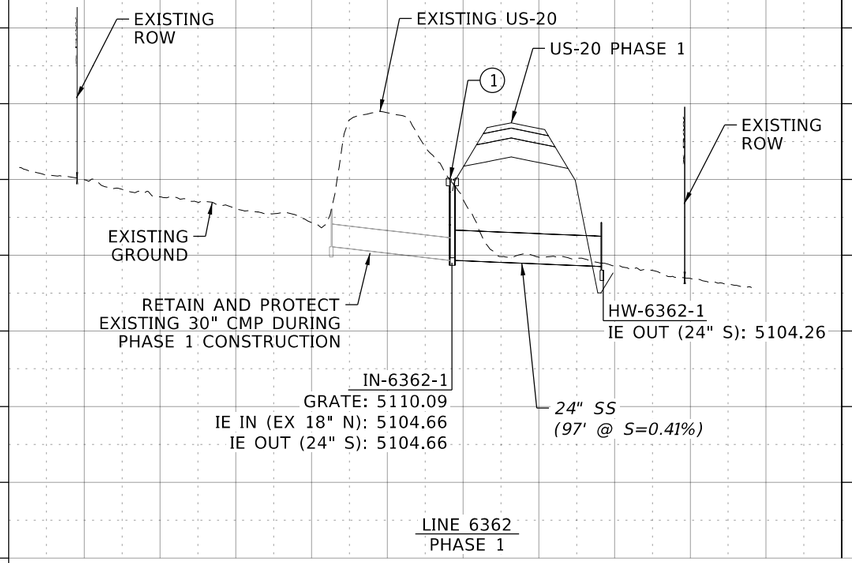

LINE 6362
PHASE 1

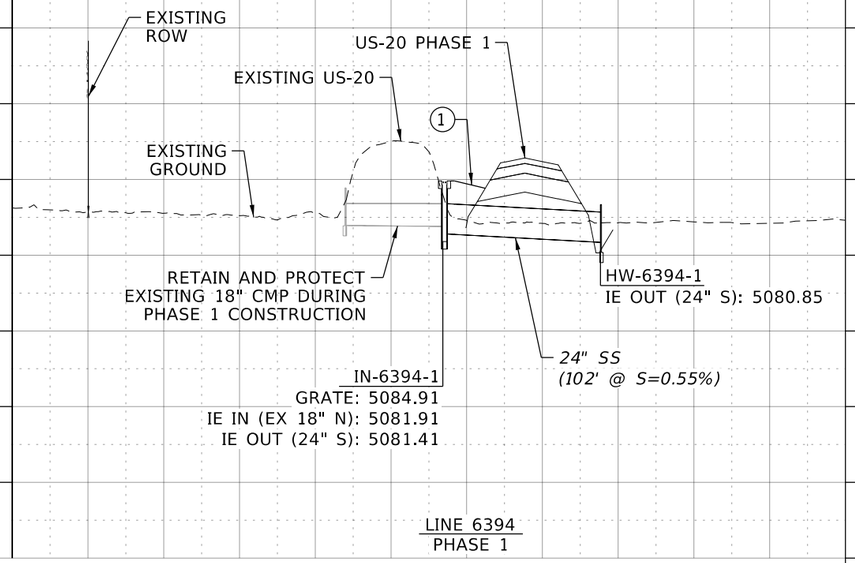

LINE 6394
PHASE 1

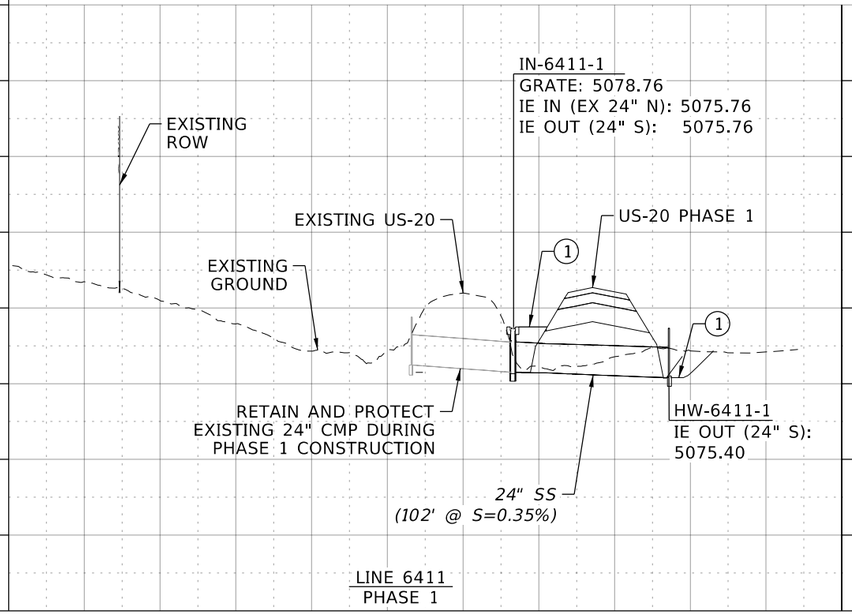

LINE 6411
PHASE 1

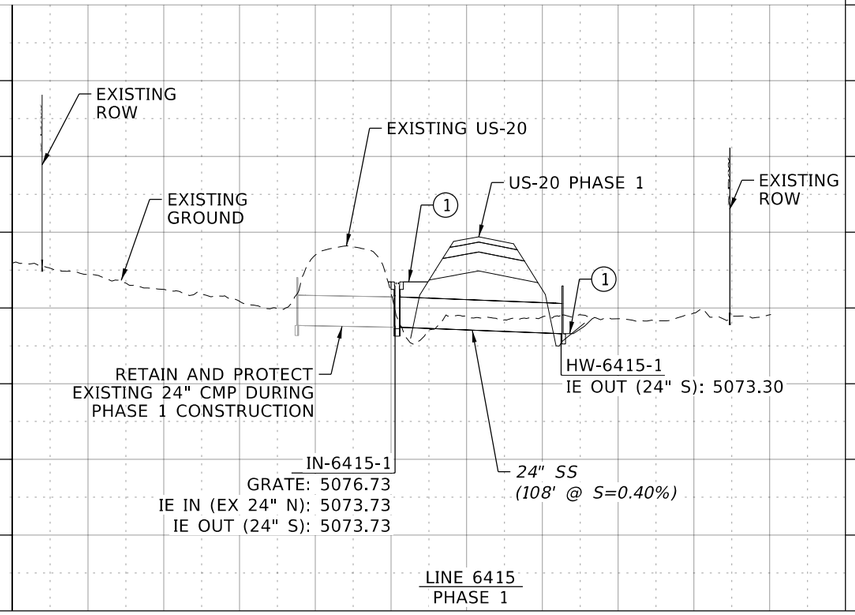

LINE 6415
PHASE 1

NOTE:

① SEE PIPE AND DRAINAGE STRUCTURE COVER DETAILS.

REVISIONS			
NO.	DATE	BY	DESCRIPTION

DESIGNED	D. ABEDI
DESIGN CHECKED	C. MCALISTER
DETAILED	P. CONSALVO
DRAWING CHECKED	C. MCALISTER

SCALES SHOWN ARE FOR 11" X 17" PRINTS ONLY

CADD FILE NAME
24149_Drpr_D211.DGN

DRAWING DATE:
November 21, 2025

IDAHO TRANSPORTATION DEPARTMENT
YOUR Safety→YOUR Mobility→YOUR Economic Opportunity

DAVID EVANS AND ASSOCIATES INC.

PROJECT NO.
A024(149)

DRAINAGE PROFILE
US 20, BONNEVILLE COUNTY
LINE TO MP 291
PHASE 1

ENGLISH

COUNTY
BINGHAM/BONNEVILLE

KEY NUMBER
24149

SHEET 293 OF 441

NOT APPROVED FOR INTERMEDIATE CONSTRUCTION

November 21, 2025 4:55:12 PM
pw://itd-pw.bentley.com:itd-pw-01/Documents/District 6/Projects/prj24394/Project_Development/Plan Sheets/Package 2 (KN 24149)/Drainage/24149_Drpr_D211.DGN

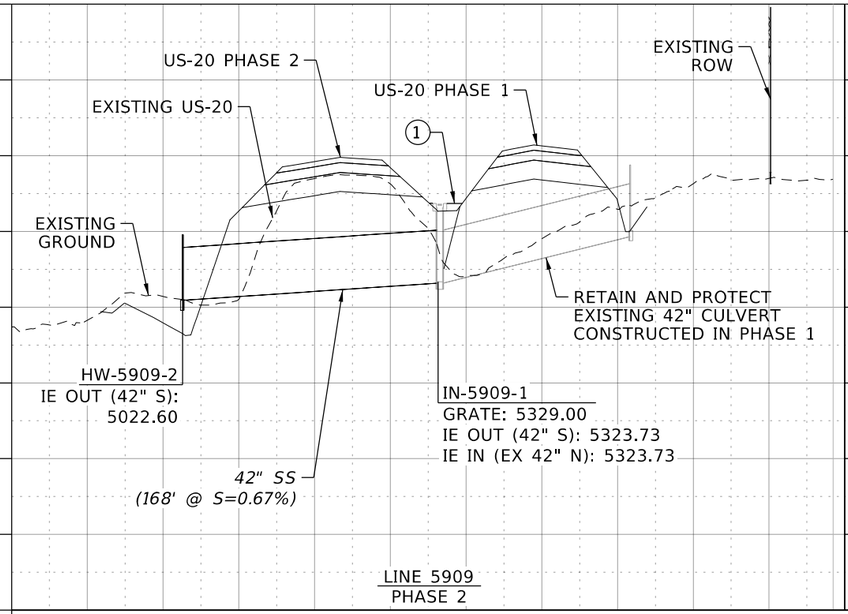

LINE 5909
PHASE 2

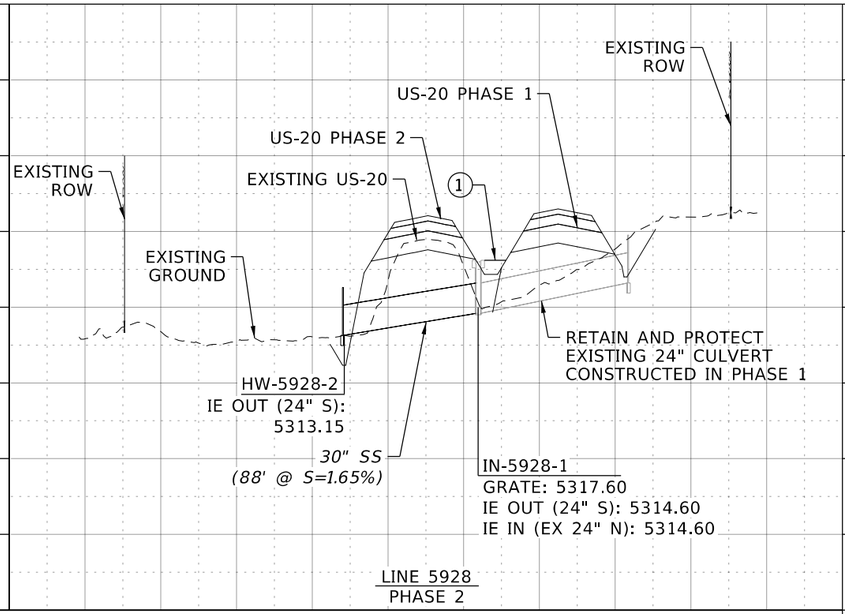

LINE 5928
PHASE 2

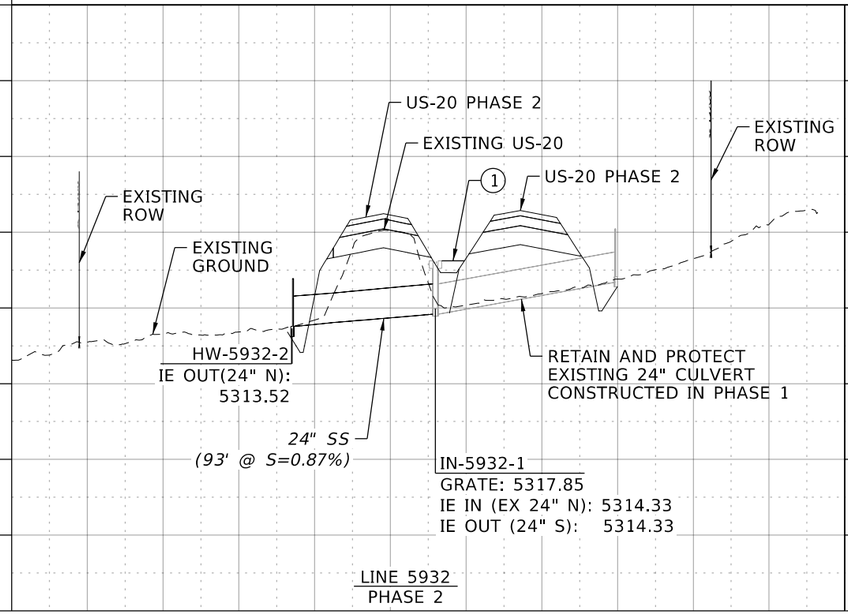

LINE 5932
PHASE 2

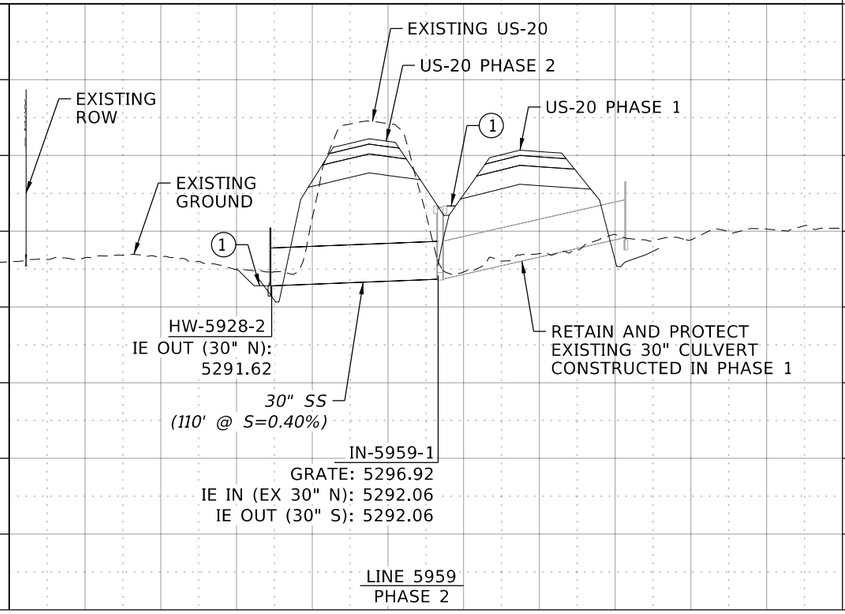

LINE 5959
PHASE 2

NOTE:

① SEE PIPE AND DRAINAGE STRUCTURE COVER DETAILS.

REVISIONS			
NO.	DATE	BY	DESCRIPTION

DESIGNED	D. ABEDI
DESIGN CHECKED	C. MCALISTER
DETAILED	P. CONSALVO
DRAWING CHECKED	C. MCALISTER

SCALES SHOWN ARE FOR 11" X 17" PRINTS ONLY

CADD FILE NAME: 24149_Drpr_D212.DGN

DRAWING DATE: November 21, 2025

IDAHO TRANSPORTATION DEPARTMENT
YOUR Safety→YOUR Mobility→YOUR Economic Opportunity

DAVID EVANS AND ASSOCIATES INC.

PROJECT NO.: A024(149)

DRAINAGE PROFILE: US 20, BONNEVILLE COUNTY LINE TO MP 291 PHASE 2

ENGLISH

COUNTY: BINGHAM/BONNEVILLE

KEY NUMBER: 24149

SHEET 294 OF 441

NOT APPROVED FOR INTERMEDIATE CONSTRUCTION

November 21, 2025 4:55:26 PM
pw://itd-pw.bentley.com:itd-pw-01/Documents/District 6/Projects/prj24394/Project_Development/Plan Sheets/Package 2 (KN 24149)/Drainage/24149_Drpr_D212.DGN

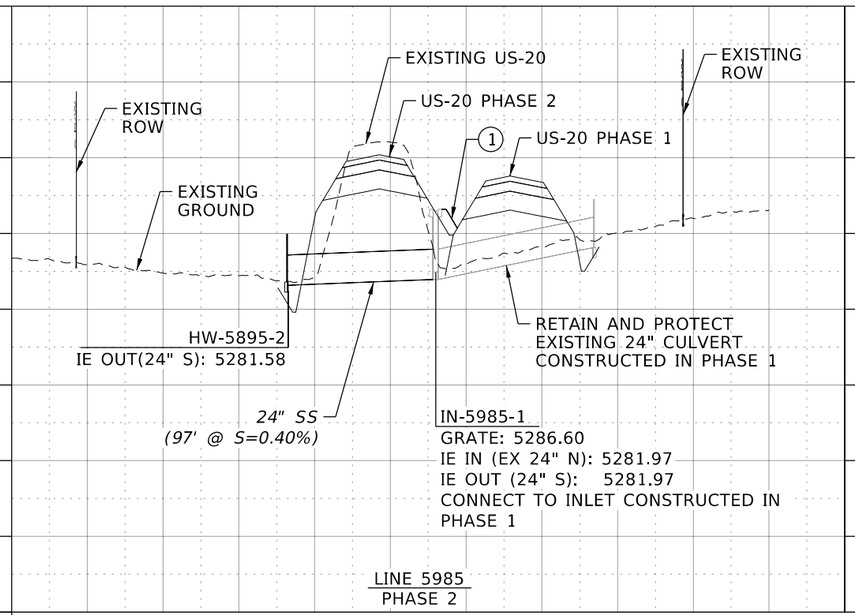

LINE 5985
PHASE 2

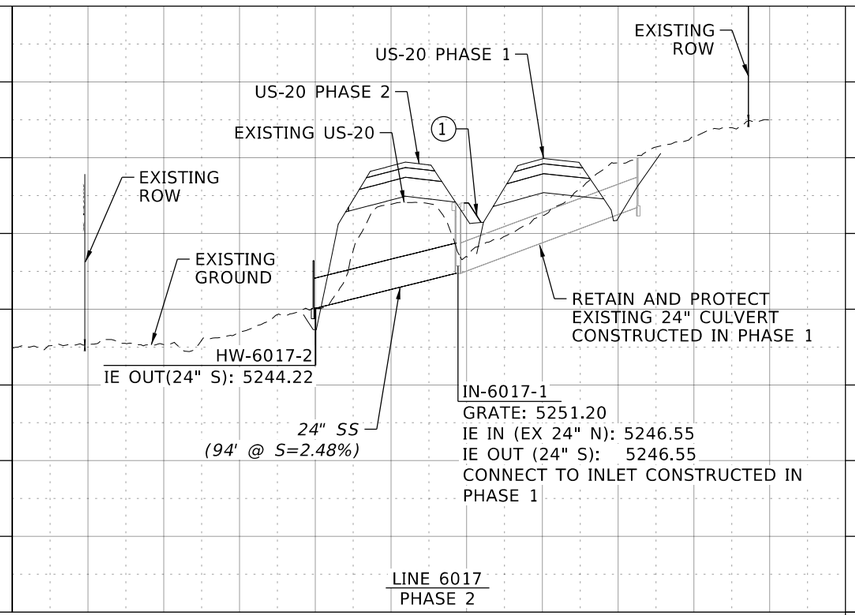

LINE 6017
PHASE 2

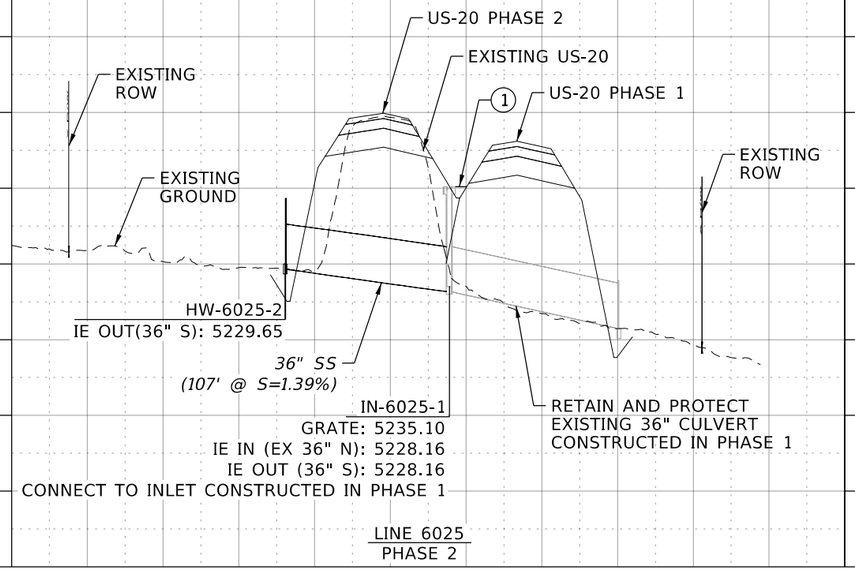

LINE 6025
PHASE 2

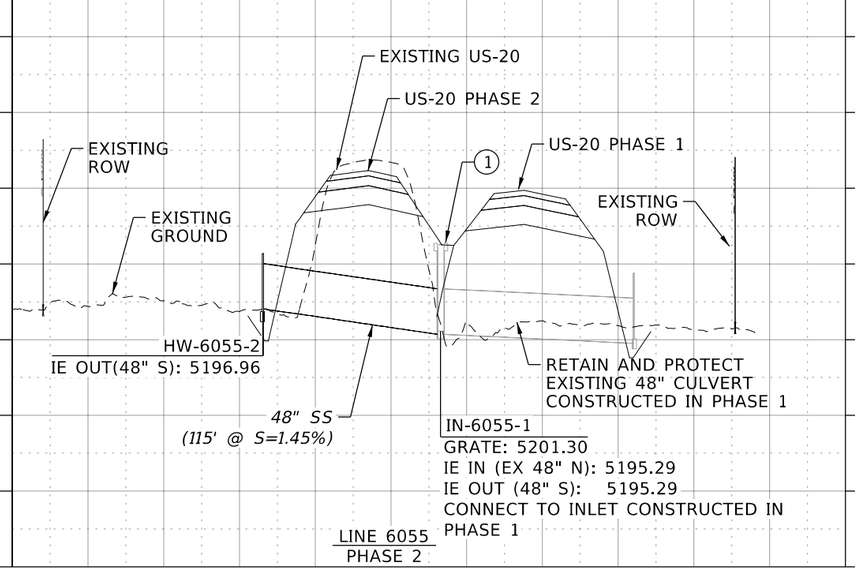

LINE 6055
PHASE 2

NOTE:

① SEE PIPE AND DRAINAGE STRUCTURE COVER DETAILS.

REVISIONS			
NO.	DATE	BY	DESCRIPTION

DESIGNED	D. ABEDI
DESIGN CHECKED	C. MCALISTER
DETAILED	P. CONSALVO
DRAWING CHECKED	C. MCALISTER

SCALES SHOWN ARE FOR 11" X 17" PRINTS ONLY

CADD FILE NAME
24149_Drpr_D213.DGN

DRAWING DATE:
November 21, 2025

IDAHO TRANSPORTATION DEPARTMENT
YOUR Safety→YOUR Mobility→YOUR Economic Opportunity

DAVID EVANS AND ASSOCIATES INC.

PROJECT NO.
A024(149)

DRAINAGE PROFILE
US 20, BONNEVILLE COUNTY
LINE TO MP 291
PHASE 2

ENGLISH

COUNTY
BINGHAM/BONNEVILLE

KEY NUMBER
24149

SHEET 295 OF 441

NOT APPROVED FOR INTERMEDIATE CONSTRUCTION

November 21, 2025 4:55:39 PM
pw://itd-pw.bentley.com:itd-pw-01/Documents/District 6/Projects/prj24394/Project_Development/Plan Sheets/Package 2 (KN 24149)/Drainage/24149_Drpr_D213.DGN

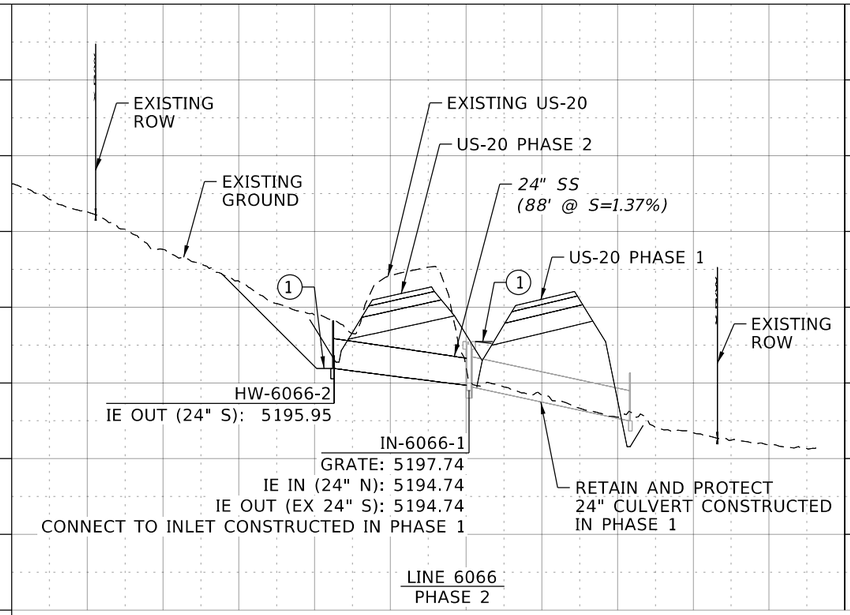

LINE 6066
PHASE 2

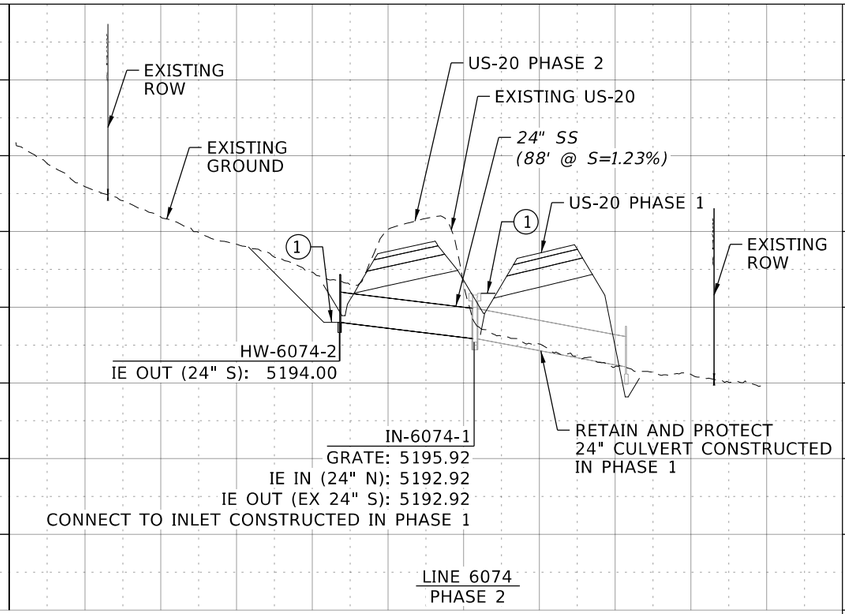

LINE 6074
PHASE 2

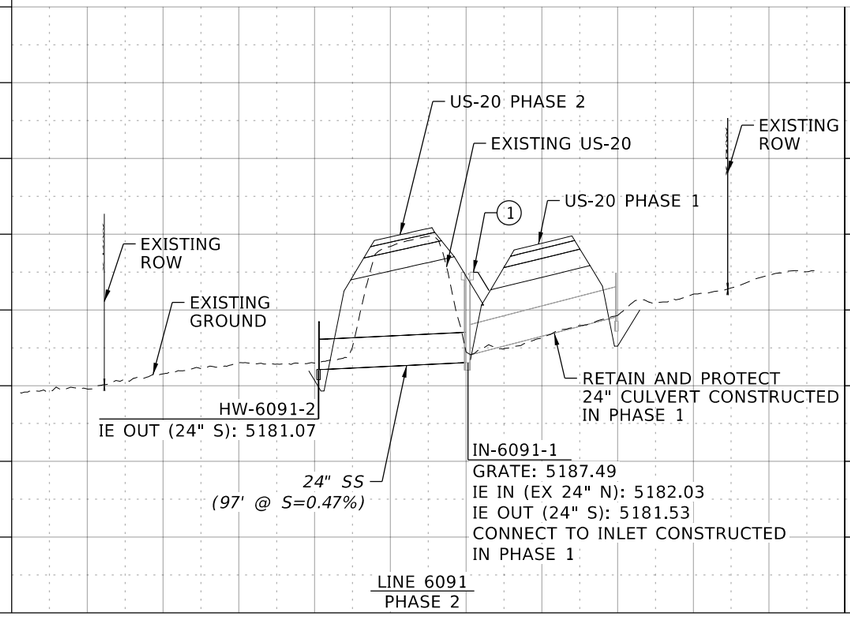

LINE 6091
PHASE 2

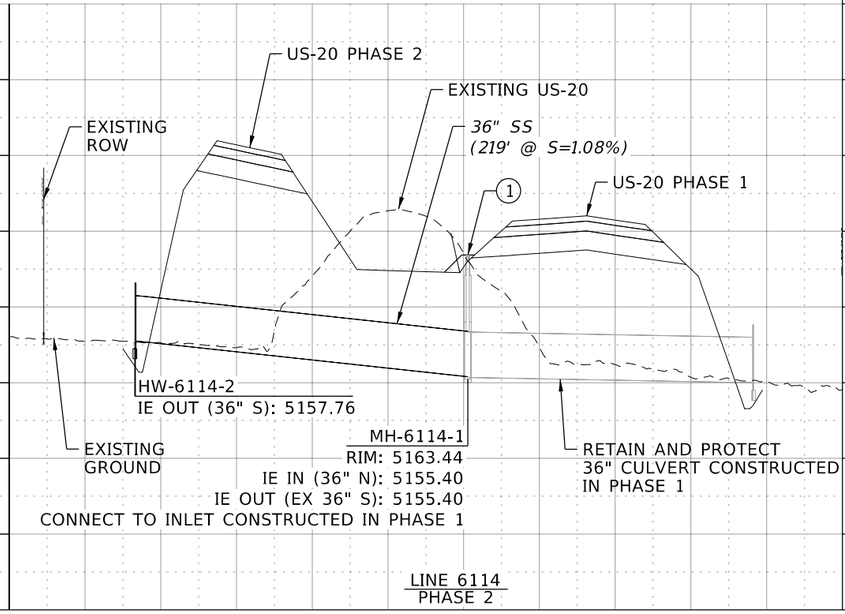

LINE 6114
PHASE 2

NOTE:

① SEE PIPE AND DRAINAGE STRUCTURE COVER DETAILS.

REVISIONS			
NO.	DATE	BY	DESCRIPTION

DESIGNED	D. ABEDI
DESIGN CHECKED	C. MCALISTER
DETAILED	P. CONSALVO
DRAWING CHECKED	C. MCALISTER

SCALES SHOWN ARE FOR 11" X 17" PRINTS ONLY

CADD FILE NAME
24149_Drpr_D215.DGN

DRAWING DATE:
November 21, 2025

IDAHO TRANSPORTATION DEPARTMENT
YOUR Safety→YOUR Mobility→YOUR Economic Opportunity

DAVID EVANS AND ASSOCIATES INC.

PROJECT NO.
A024(149)

DRAINAGE PROFILE
US 20, BONNEVILLE COUNTY
LINE TO MP 291
PHASE 2

ENGLISH

COUNTY
BINGHAM/BONNEVILLE

KEY NUMBER
24149

SHEET 296 OF 441

NOT APPROVED FOR INTERMEDIATE CONSTRUCTION

November 21, 2025 4:55:50 PM
pw://itd-pw.bentley.com:itd-pw-01/Documents/District 6/Projects/prj24394/Project_Development/Plan Sheets/Package 2 (KN 24149)/Drainage/24149_Drpr_D215.DGN

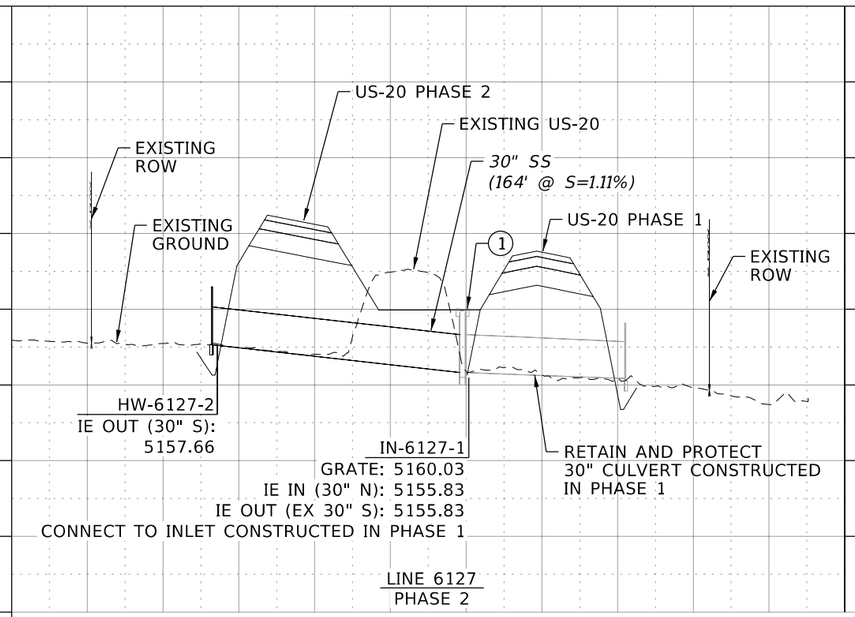

LINE 6127
PHASE 2

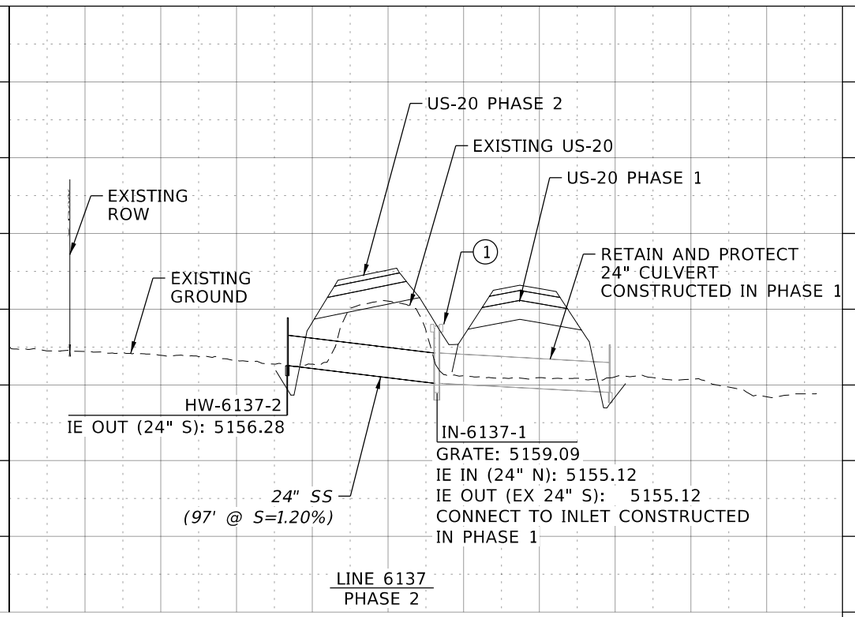

LINE 6137
PHASE 2

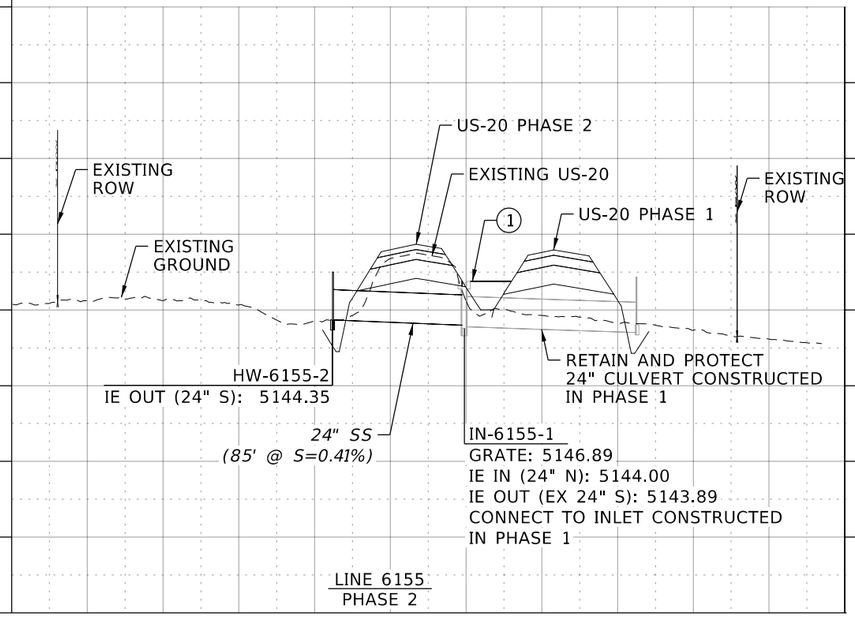

LINE 6155
PHASE 2

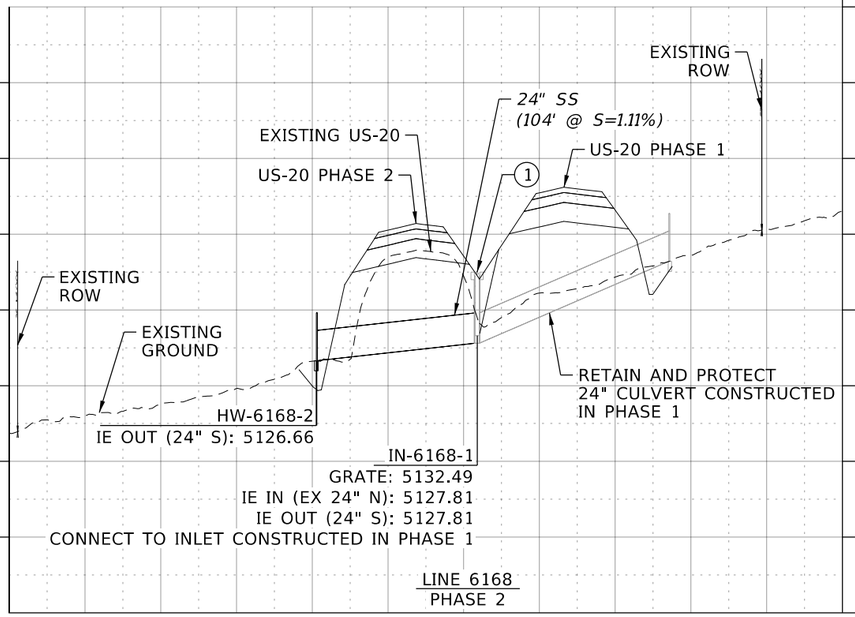

LINE 6168
PHASE 2

NOTE:

① SEE PIPE AND DRAINAGE STRUCTURE COVER DETAILS.

REVISIONS			
NO.	DATE	BY	DESCRIPTION

DESIGNED	D. ABEDI
DESIGN CHECKED	C. MCALISTER
DETAILED	P. CONSALVO
DRAWING CHECKED	C. MCALISTER

SCALES SHOWN ARE FOR 11" X 17" PRINTS ONLY

CADD FILE NAME
24149_Drpr_D216.DGN

DRAWING DATE:
November 21, 2025

IDAHO TRANSPORTATION DEPARTMENT
YOUR Safety→YOUR Mobility→YOUR Economic Opportunity

DAVID EVANS AND ASSOCIATES INC.

PROJECT NO.
A024(149)

DRAINAGE PROFILE
US 20, BONNEVILLE COUNTY
LINE TO MP 291
PHASE 2

ENGLISH

COUNTY
BINGHAM/BONNEVILLE

KEY NUMBER
24149

SHEET 297 OF 441

NOT APPROVED
INTERMEDIATE
FOR CONSTRUCTION

November 21, 2025 4:55:59 PM
pw://itd-pw.bentley.com:itd-pw-01/Documents/District 6/Projects/prj24394/Project_Development/Plan Sheets/Package 2 (KN 24149)/Drainage/24149_Drpr_D216.DGN

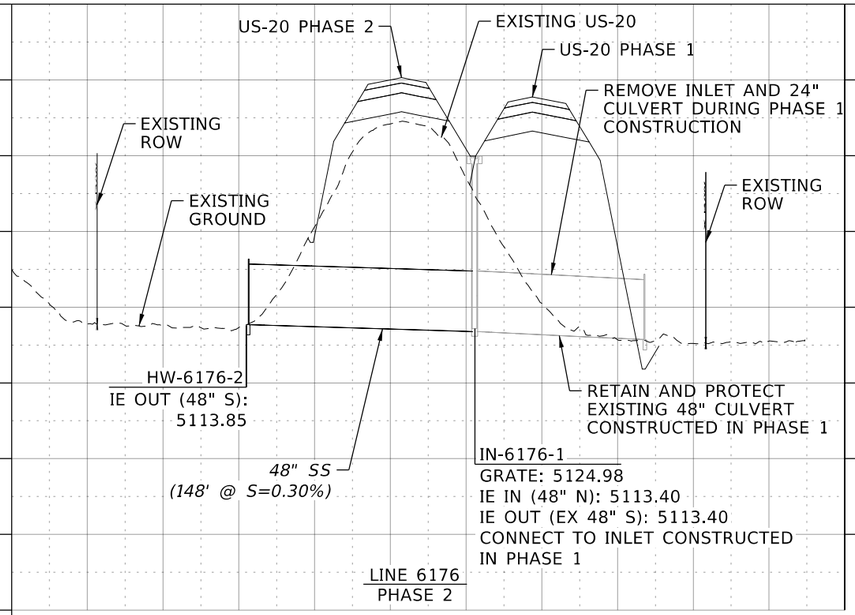

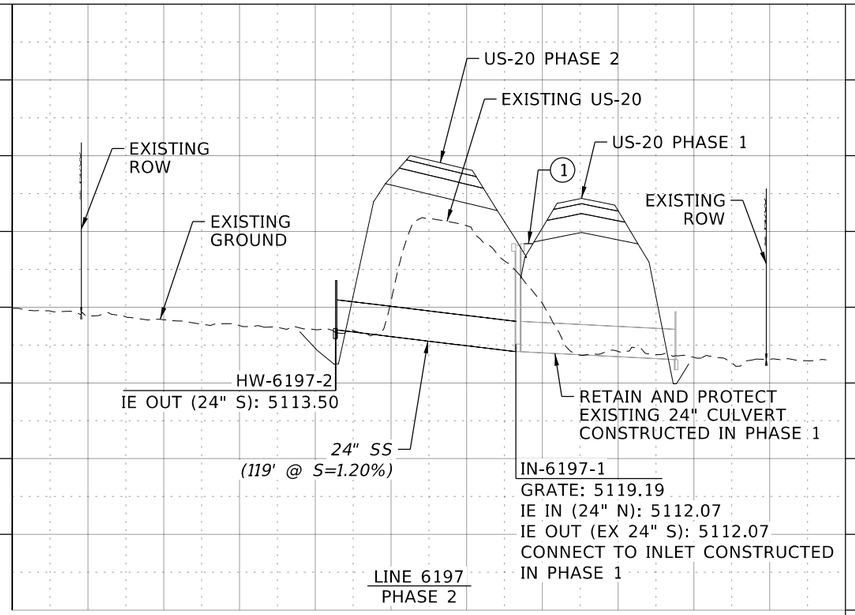

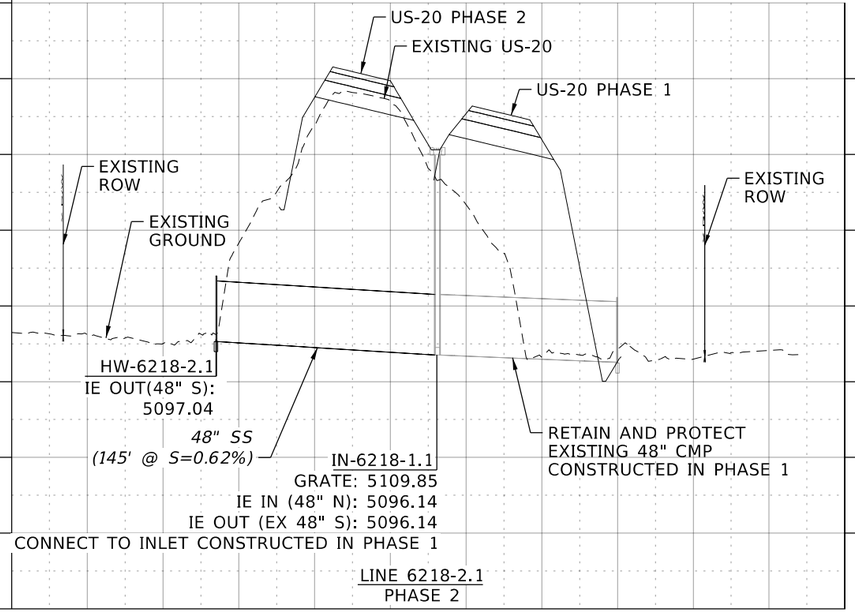

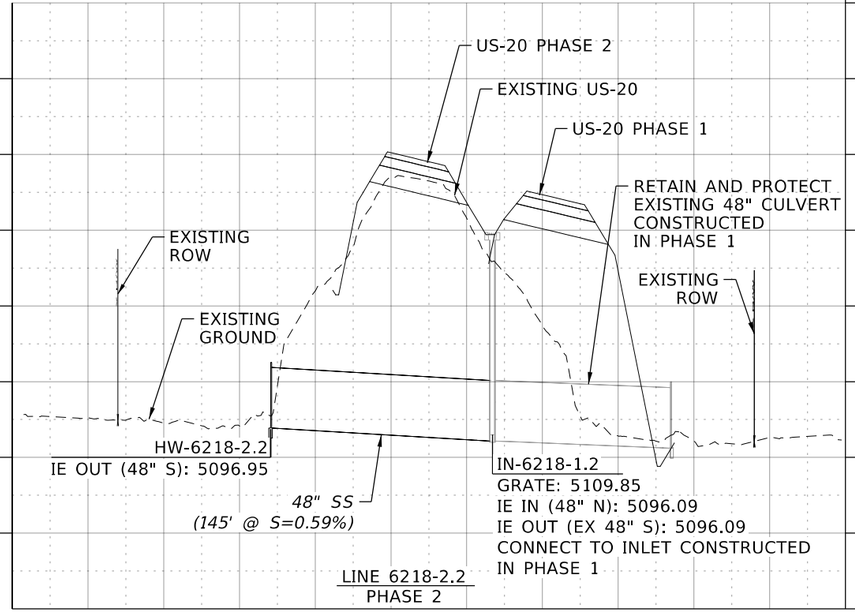

NOTE:

① SEE PIPE AND DRAINAGE STRUCTURE COVER DETAILS.

REVISIONS			
NO.	DATE	BY	DESCRIPTION

DESIGNED	D. ABEDI
DESIGN CHECKED	C. MCALISTER
DETAILED	P. CONSALVO
DRAWING CHECKED	C. MCALISTER

SCALES SHOWN ARE FOR 11" X 17" PRINTS ONLY

CADD FILE NAME 24149_Drpr_D217.DGN

DRAWING DATE: November 21, 2025

IDAHO TRANSPORTATION DEPARTMENT

YOUR Safety→YOUR Mobility→YOUR Economic Opportunity

DAVID EVANS AND ASSOCIATES INC.

PROJECT NO. A024(149)

DRAINAGE PROFILE

US 20, BONNEVILLE COUNTY
LINE TO MP 291
PHASE 2

ENGLISH

COUNTY BINGHAM/BONNEVILLE

KEY NUMBER 24149

SHEET 298 OF 441

NOT APPROVED FOR INTERMEDIATE CONSTRUCTION

November 21, 2025 4:56:10 PM
pw://itd-pw.bentley.com:itd-pw-01/Documents/District 6/Projects/prj24394/Project_Development/Plan Sheets/Package 2 (KN 24149)/Drainage/24149_Drpr_D217.DGN

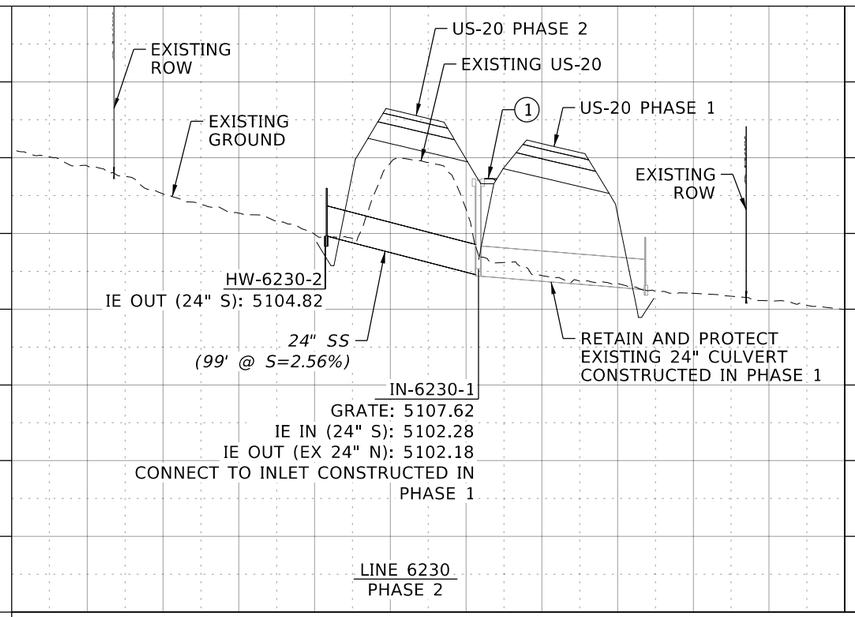

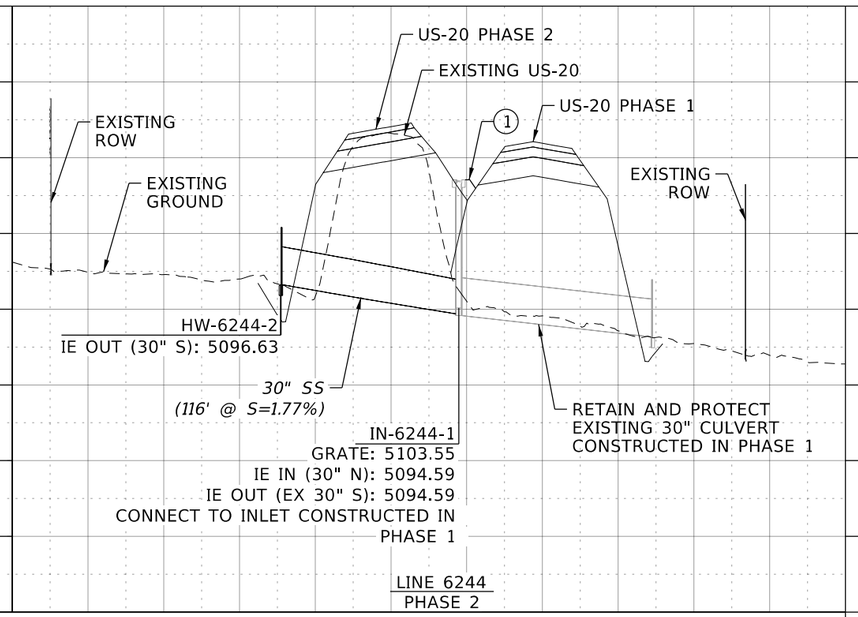

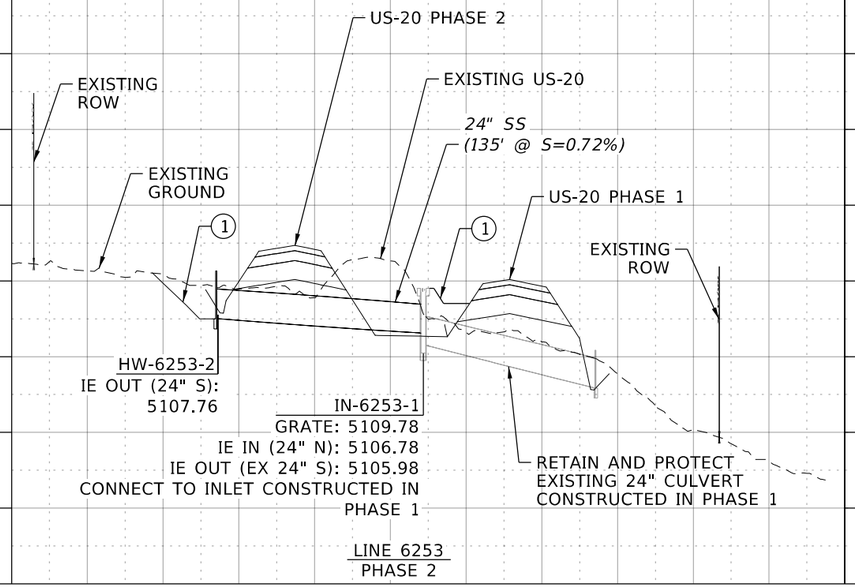

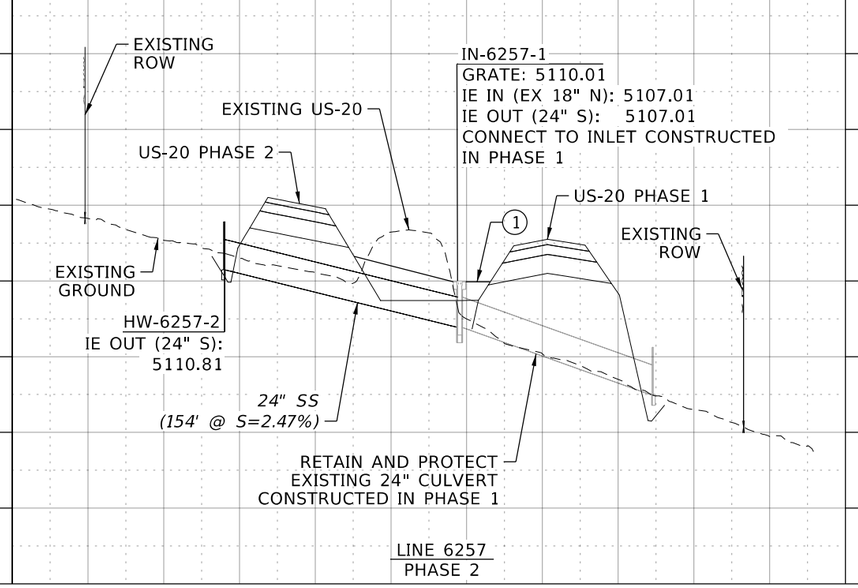

NOTE:

① SEE PIPE AND DRAINAGE STRUCTURE COVER DETAILS.

REVISIONS			
NO.	DATE	BY	DESCRIPTION

DESIGNED	D. ABEDI
DESIGN CHECKED	C. MCALISTER
DETAILED	P. CONSALVO
DRAWING CHECKED	C. MCALISTER

SCALES SHOWN ARE FOR 11" X 17" PRINTS ONLY

CADD FILE NAME 24149_Drpr_D218.DGN

DRAWING DATE: November 21, 2025

IDAHO TRANSPORTATION DEPARTMENT

YOUR Safety→YOUR Mobility→YOUR Economic Opportunity

DAVID EVANS AND ASSOCIATES INC.

PROJECT NO. A024(149)

DRAINAGE PROFILE

US 20, BONNEVILLE COUNTY
LINE TO MP 291
PHASE 2

ENGLISH

COUNTY BINGHAM/BONNEVILLE

KEY NUMBER 24149

SHEET 299 OF 441

NOT APPROVED FOR CONSTRUCTION
INTERMEDIATE

November 21, 2025 4:56:22 PM
pw://itd-pw.bentley.com:itd-pw-01/Documents/District 6/Projects/prj24394/Project_Development/Plan Sheets/Package 2 (KN 24149)/Drainage/24149_Drpr_D218.DGN

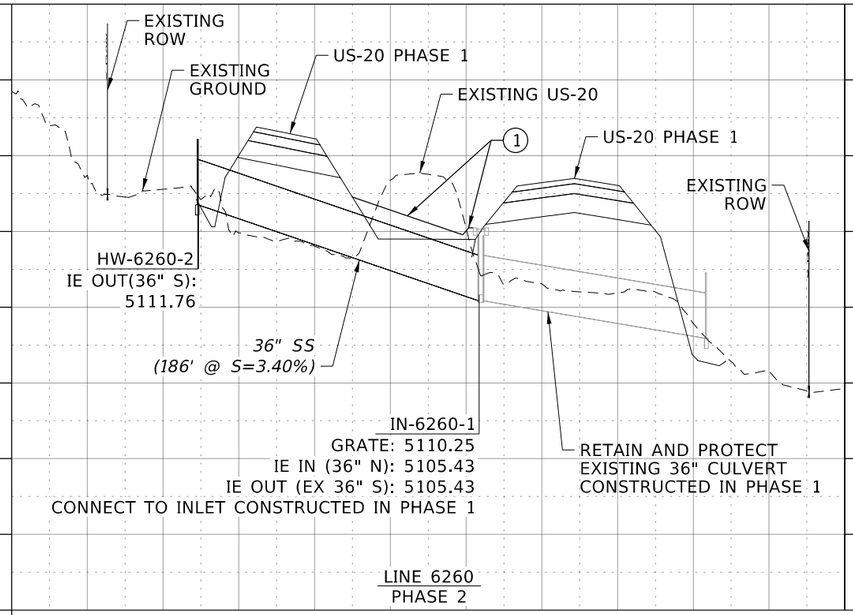

LINE 6260
PHASE 2

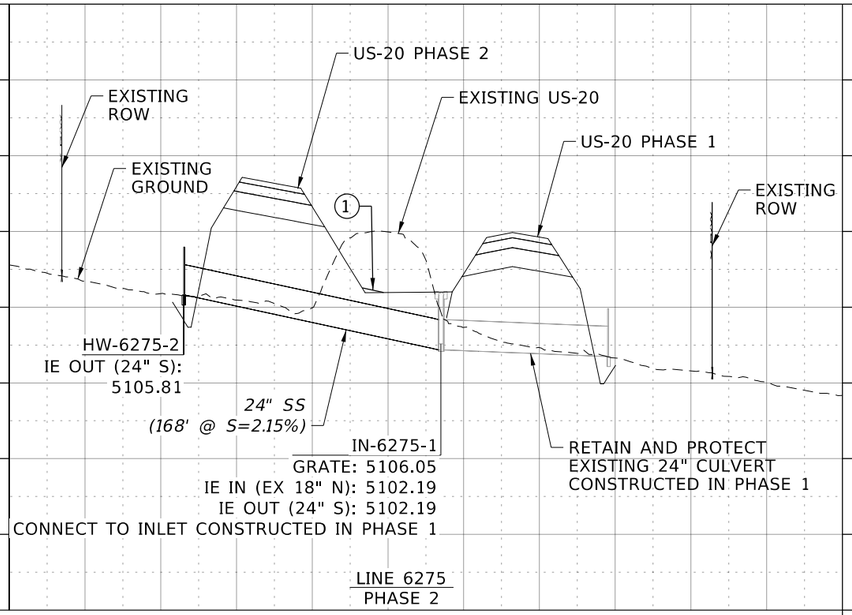

LINE 6275
PHASE 2

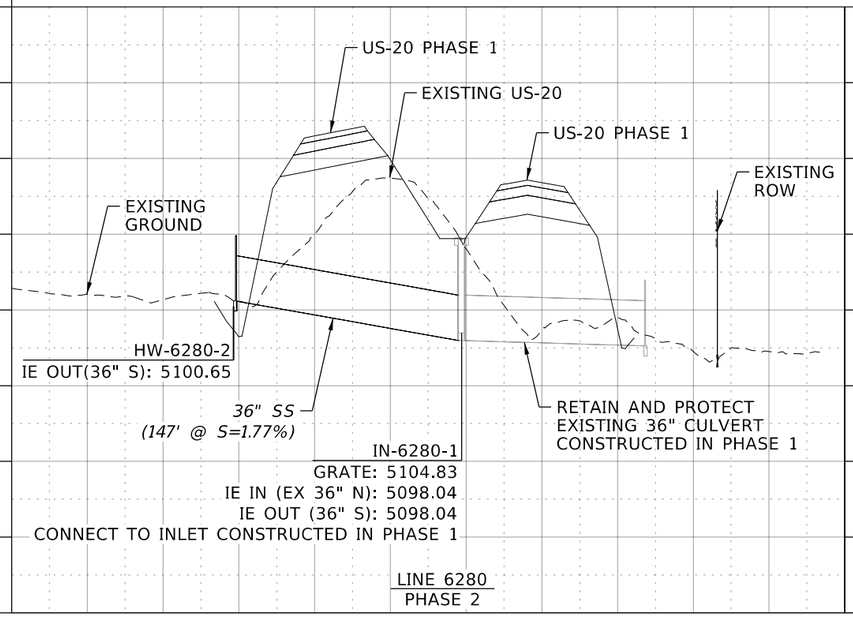

LINE 6280
PHASE 2

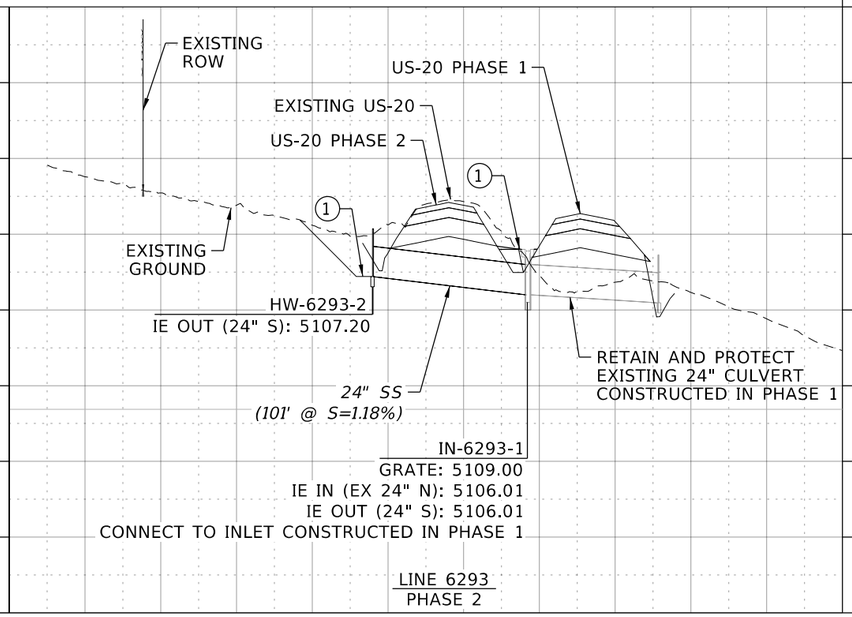

LINE 6293
PHASE 2

NOTE:

① SEE PIPE AND DRAINAGE STRUCTURE COVER DETAILS.

REVISIONS			
NO.	DATE	BY	DESCRIPTION

DESIGNED	D. ABEDI
DESIGN CHECKED	C. MCALISTER
DETAILED	P. CONSALVO
DRAWING CHECKED	C. MCALISTER

SCALES SHOWN ARE FOR 11" X 17" PRINTS ONLY

CADD FILE NAME
24149_Drpr_D219.DGN

DRAWING DATE:
November 21, 2025

IDAHO TRANSPORTATION DEPARTMENT
YOUR Safety→YOUR Mobility→YOUR Economic Opportunity

DAVID EVANS AND ASSOCIATES INC.

PROJECT NO.	DRAINAGE PROFILE
A024(149)	US 20, BONNEVILLE COUNTY LINE TO MP 291 PHASE 2

ENGLISH

COUNTY
BINGHAM/BONNEVILLE

KEY NUMBER
24149

SHEET 300 OF 441

NOT APPROVED
INTERMEDIATE
FOR CONSTRUCTION

November 21, 2025 4:56:35 PM
pw://itd-pw.bentley.com:itd-pw-01/Documents/District 6/Projects/prj24394/Project_Development/Plan Sheets/Package 2 (KN 24149)/Drainage/24149_Drpr_D219.DGN

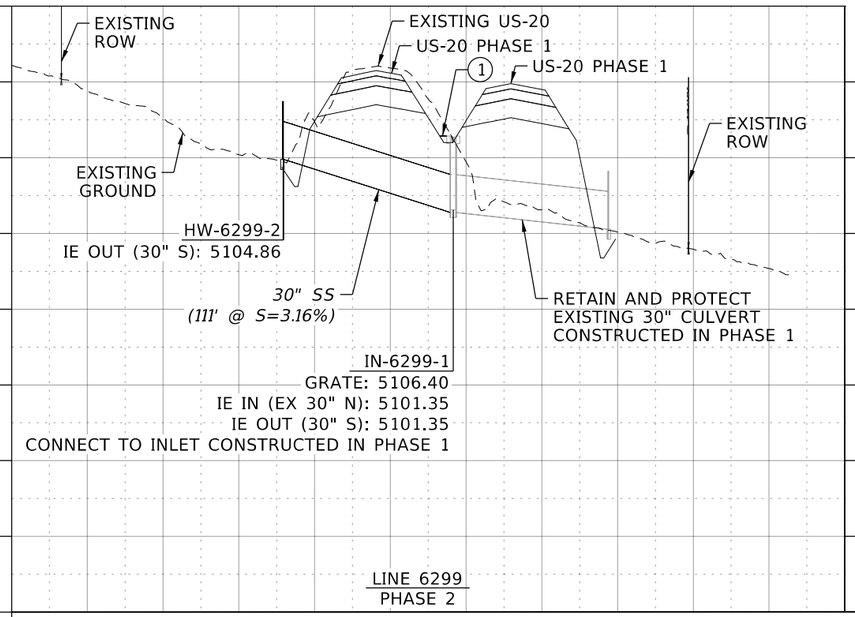

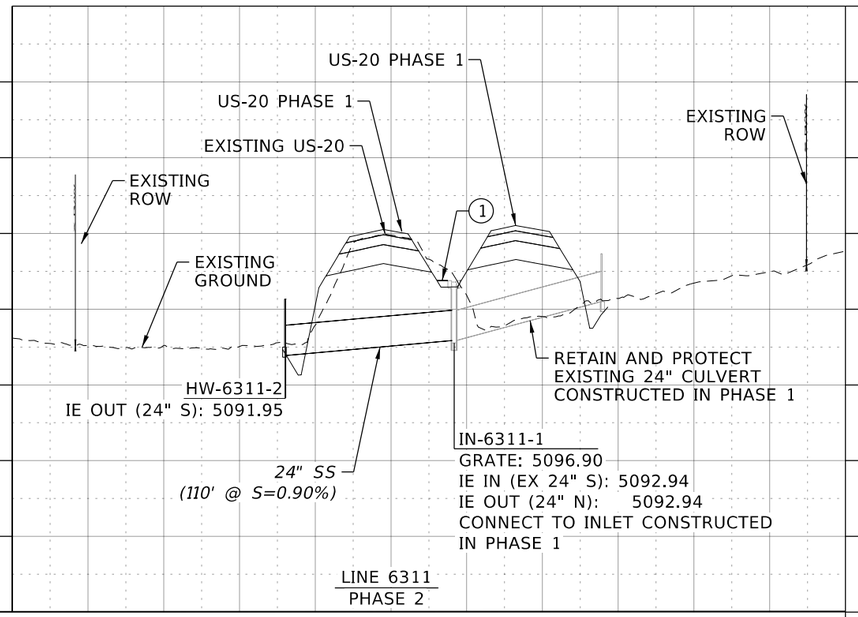

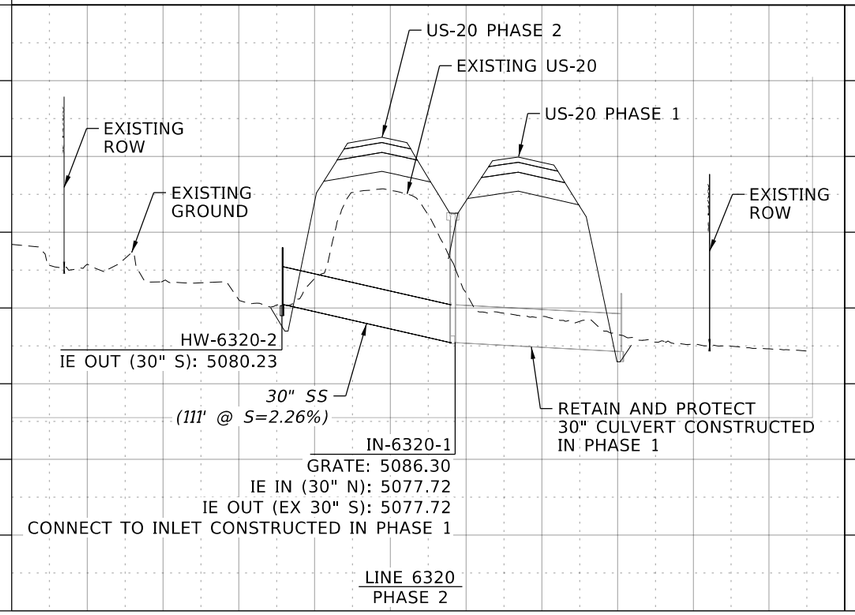

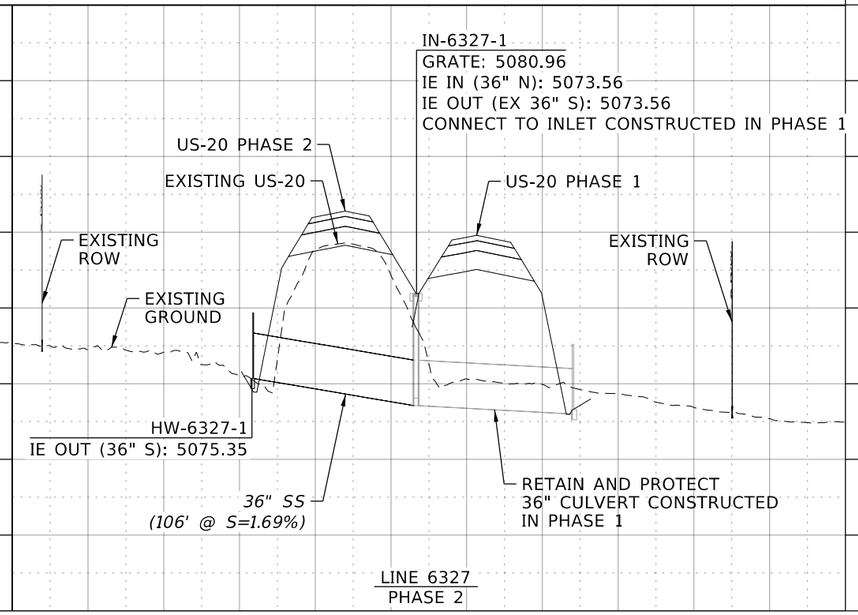

NOTE:

① SEE PIPE AND DRAINAGE STRUCTURE COVER DETAILS.

REVISIONS			
NO.	DATE	BY	DESCRIPTION

DESIGNED	D. ABEDI
DESIGN CHECKED	C. MCALISTER
DETAILED	P. CONSALVO
DRAWING CHECKED	C. MCALISTER

SCALES SHOWN ARE FOR 11" X 17" PRINTS ONLY

CADD FILE NAME
24149_Drpr_D220.DGN

DRAWING DATE:
November 21, 2025

IDAHO TRANSPORTATION DEPARTMENT
YOUR Safety→YOUR Mobility→YOUR Economic Opportunity

DAVID EVANS AND ASSOCIATES INC.

PROJECT NO.
A024(149)

DRAINAGE PROFILE
US 20, BONNEVILLE COUNTY
LINE TO MP 291
PHASE 2

ENGLISH

COUNTY
BINGHAM/BONNEVILLE

KEY NUMBER
24149

SHEET 301 OF 441

NOT APPROVED FOR CONSTRUCTION
INTERMEDIATE

November 21, 2025 4:56:49 PM
pw://itd-pw.bentley.com:itd-pw-01/Documents/District 6/Projects/prj24394/Project_Development/Plan Sheets/Package 2 (KN 24149)/Drainage/24149_Drpr_D220.DGN

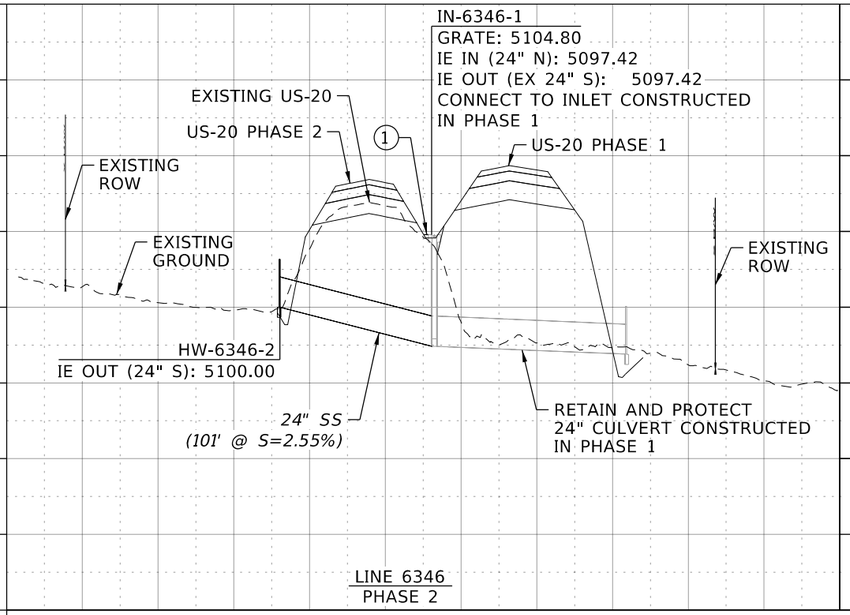

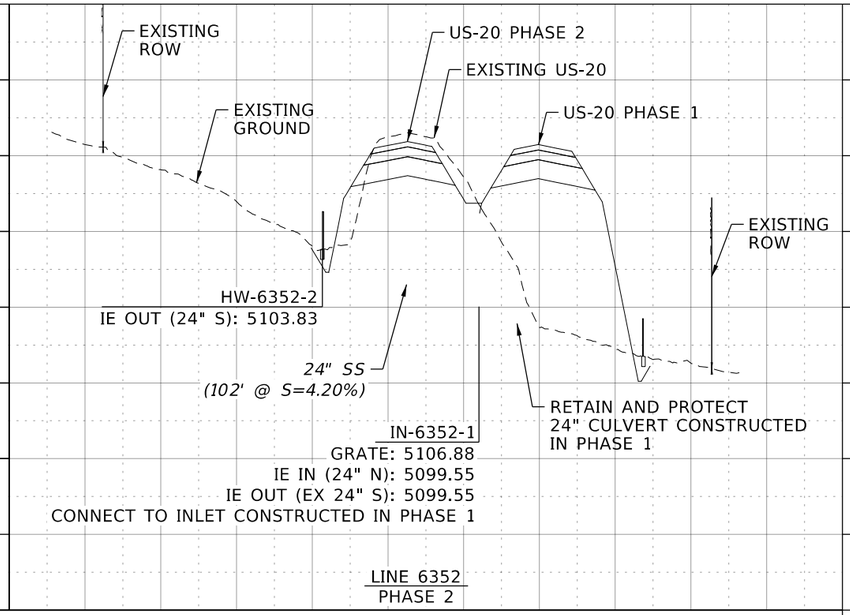

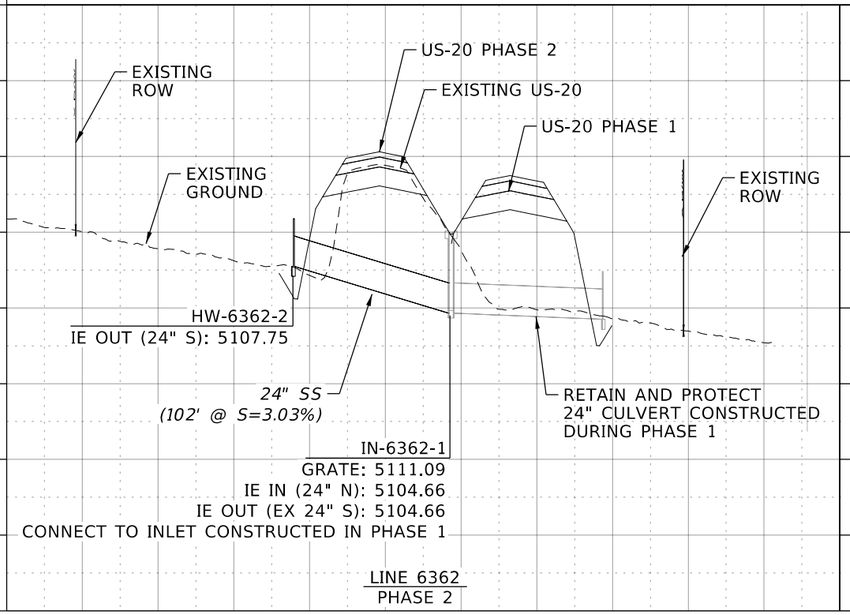

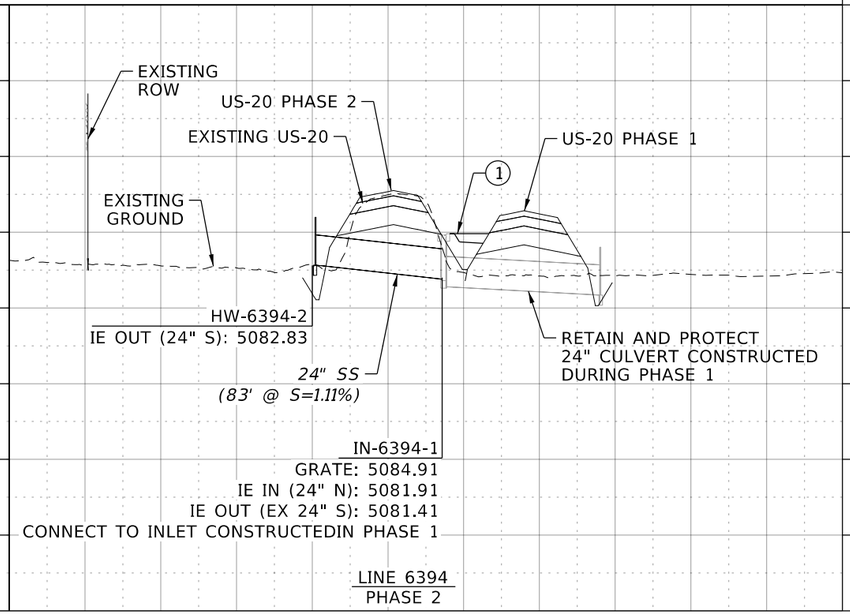

NOTE:

① SEE PIPE AND DRAINAGE STRUCTURE COVER DETAILS.

REVISIONS			
NO.	DATE	BY	DESCRIPTION

DESIGNED	D. ABEDI
DESIGN CHECKED	C. MCALISTER
DETAILED	P. CONSALVO
DRAWING CHECKED	C. MCALISTER

SCALES SHOWN ARE FOR 11" X 17" PRINTS ONLY

CADD FILE NAME 24149_Drpr_D221.DGN

DRAWING DATE: November 21, 2025

IDAHO TRANSPORTATION DEPARTMENT
YOUR Safety→YOUR Mobility→YOUR Economic Opportunity

DAVID EVANS AND ASSOCIATES INC.

PROJECT NO.	DRAINAGE PROFILE
A024(149)	US 20, BONNEVILLE COUNTY LINE TO MP 291 PHASE 2

ENGLISH

COUNTY BINGHAM/BONNEVILLE

KEY NUMBER 24149

SHEET 302 OF 441

NOT APPROVED FOR INTERMEDIATE CONSTRUCTION

November 21, 2025 4:57:03 PM
pw://itd-pw.bentley.com:itd-pw-01/Documents/District 6/Projects/prj24394/Project_Development/Plan Sheets/Package 2 (KN 24149)/Drainage/24149_Drpr_D221.DGN

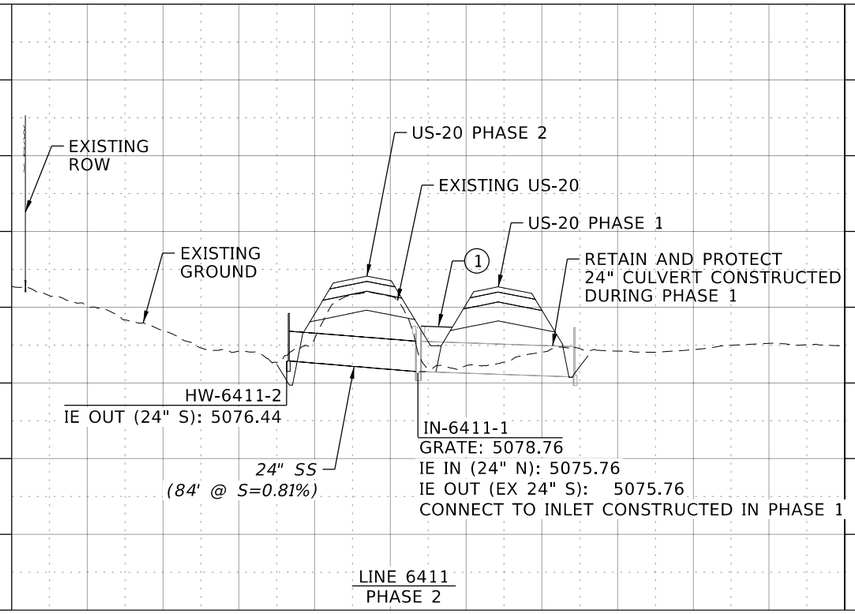

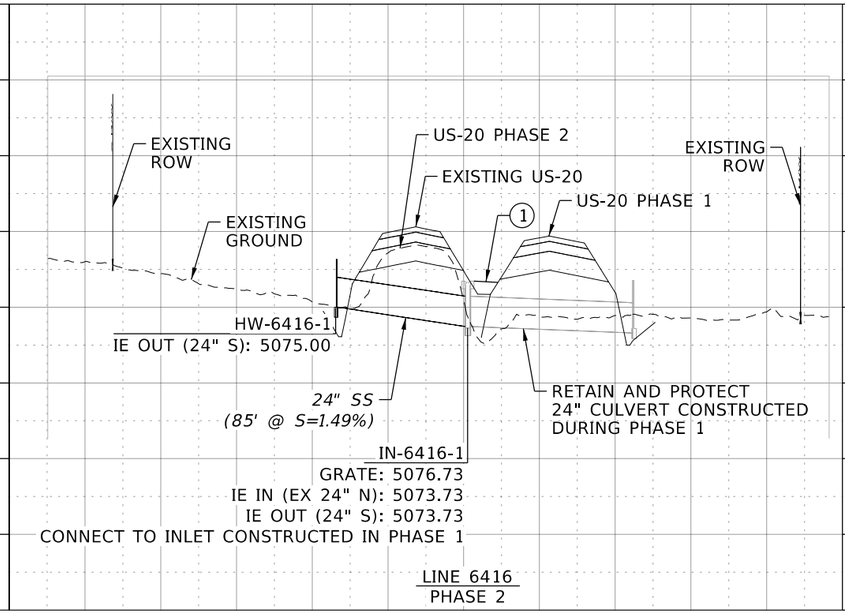

NOTE:

① SEE PIPE AND DRAINAGE STRUCTURE COVER DETAILS.

REVISIONS			
NO.	DATE	BY	DESCRIPTION

DESIGNED D. ABEDI	SCALES SHOWN ARE FOR 11" X 17" PRINTS ONLY
DESIGN CHECKED C. MCALISTER	
DETAILED P. CONSALVO	CADD FILE NAME 24149_Drpr_D222.DGN
DRAWING CHECKED C. MCALISTER	DRAWING DATE: November 21, 2025

IDAHO TRANSPORTATION DEPARTMENT
YOUR Safety→YOUR Mobility→YOUR Economic Opportunity
DAVID EVANS AND ASSOCIATES INC.

PROJECT NO.	DRAINAGE PROFILE	ENGLISH
A024(149)	US 20, BONNEVILLE COUNTY LINE TO MP 291 PHASE 2	COUNTY BINGHAM/BONNEVILLE KEY NUMBER 24149 SHEET 303 OF 441

NOT APPROVED
INTERMEDIATE
FOR CONSTRUCTION

November 21, 2025 4:57:15 PM
pw://itd-pw.bentley.com:itd-pw-01/Documents/District 6/Projects/prj24394/Project_Development/Plan Sheets/Package 2 (KN 24149)/Drainage/24149_Drpr_D222.DGN

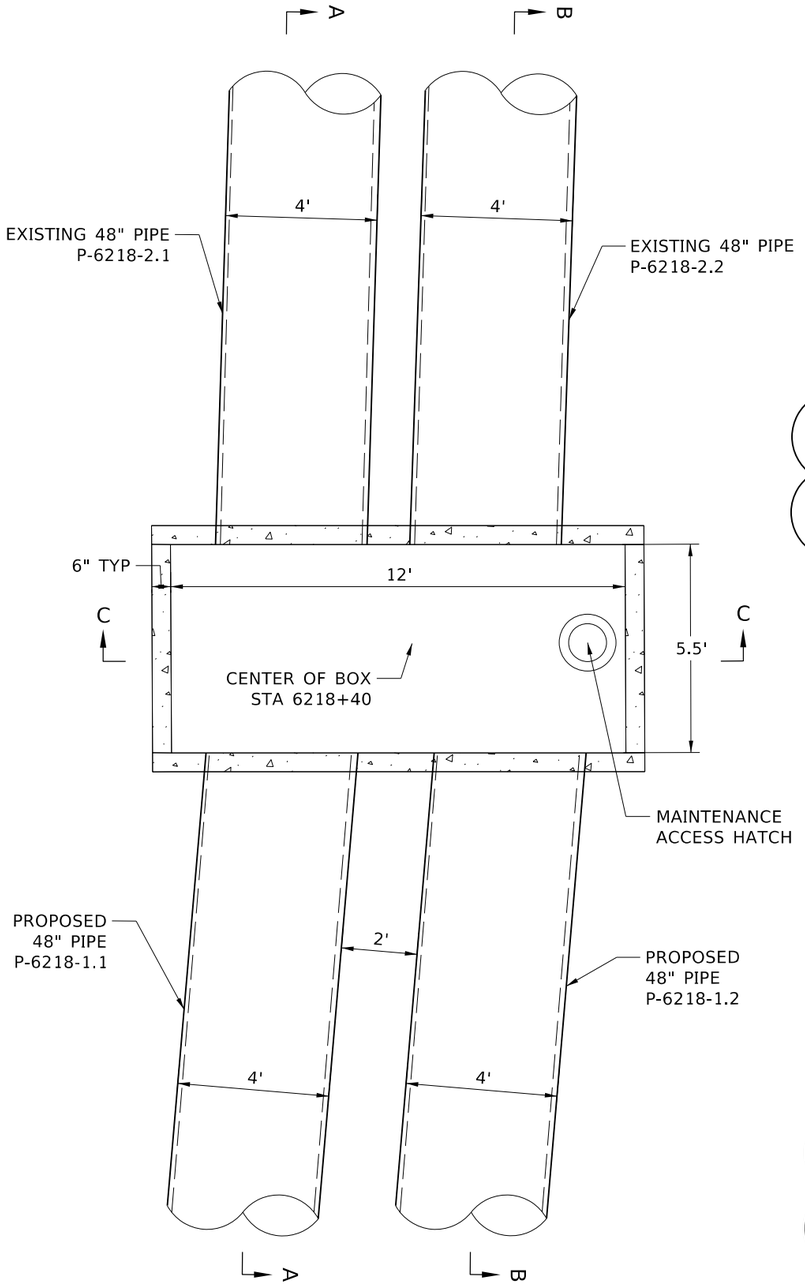

PLAN VIEW
S901-05B
SP CONC JUNCTION BOX

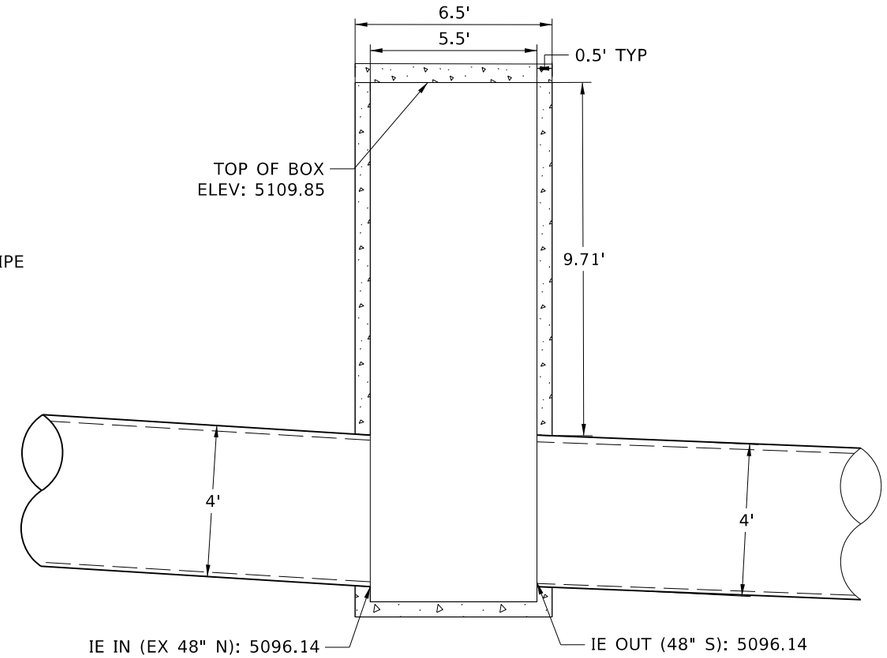

SECTION A-A

SECTION B-B

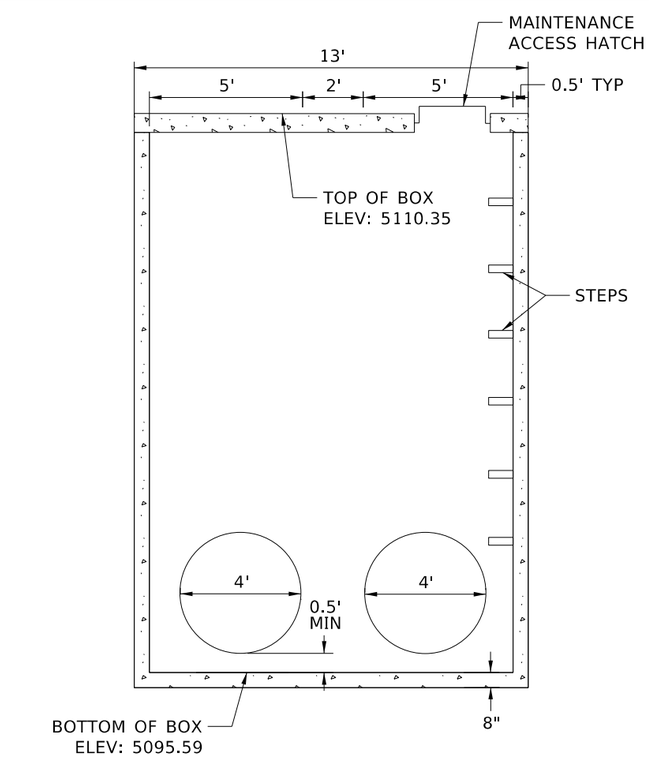

SECTION C-C

NOTES:

1. CONC JUNCTION BOX CAN BE PRECAST OR CAST-IN-PLACE. PRECAST CONC JUNCTION BOX SHALL MEET THE REQUIREMENTS OF ASTM C913.
2. CAST-IN-PLACE SP CONC JUNCTION BOX SHALL CONFORM TO SECTION 609-MINOR STRUCTURES OF THE CURRENT ITD STANDARD SPECIFICATIONS FOR HIGHWAY CONSTRUCTION.
3. A 1" SIDE DRAFT IS ALLOWED FOR FORM REMOVAL.
4. REINFORCEMENT DESIGN TO BE COMPLETED BY CONTRACTOR. ALL METAL REINFORCEMENT USED SHALL BE NO. 4 BARS. THE METAL REINFORCEMENT SHALL BE SMOOTH CUT TO ACCOMMODATE PIPES. ALL BARS SHALL HAVE A MINIMUM CONCRETE COVER OF 2" AND/OR 3" MINIMUM COVER IF CAST AGAINST EARTH.
5. SUBMIT ALL SHOP DRAWINGS, ANDMATERIAL SUBMITTALS PRIOR TO CONSTRUCTION FOR REVIEW AND APPROVAL.
6. PROVIDE TOP ACCESS HATCH FOR MAINTENANCE PERSONNEL.
7. INSTALL STEPS IN ACCORDANCE WITH AASHTO M 199.

REVISIONS			
NO.	DATE	BY	DESCRIPTION

DESIGNED	D. ABEDI
DESIGN CHECKED	C. MCALISTER
DETAILED	P. CONSALVO
DRAWING CHECKED	C. MCALISTER

SCALES SHOWN ARE FOR 11" X 17" PRINTS ONLY

CADD FILE NAME: 24149_Drdt_D201.dgn

DRAWING DATE: November 21, 2025

IDAHO TRANSPORTATION DEPARTMENT
YOUR Safety→YOUR Mobility→YOUR Economic Opportunity

DAVID EVANS AND ASSOCIATES INC.

PROJECT NO.	DRAINAGE DETAIL
A024(149)	US 20, BONNEVILLE COUNTY LINE TO MP 291 SP CONC JUNCTION BOX

ENGLISH

COUNTY: BINGHAM/BONNEVILLE

KEY NUMBER: 24149

SHEET 304 OF 441

NOT APPROVED
INTERMEDIATE
FOR CONSTRUCTION

21-NOV-2025 4:57:28 PM
$FILEA$

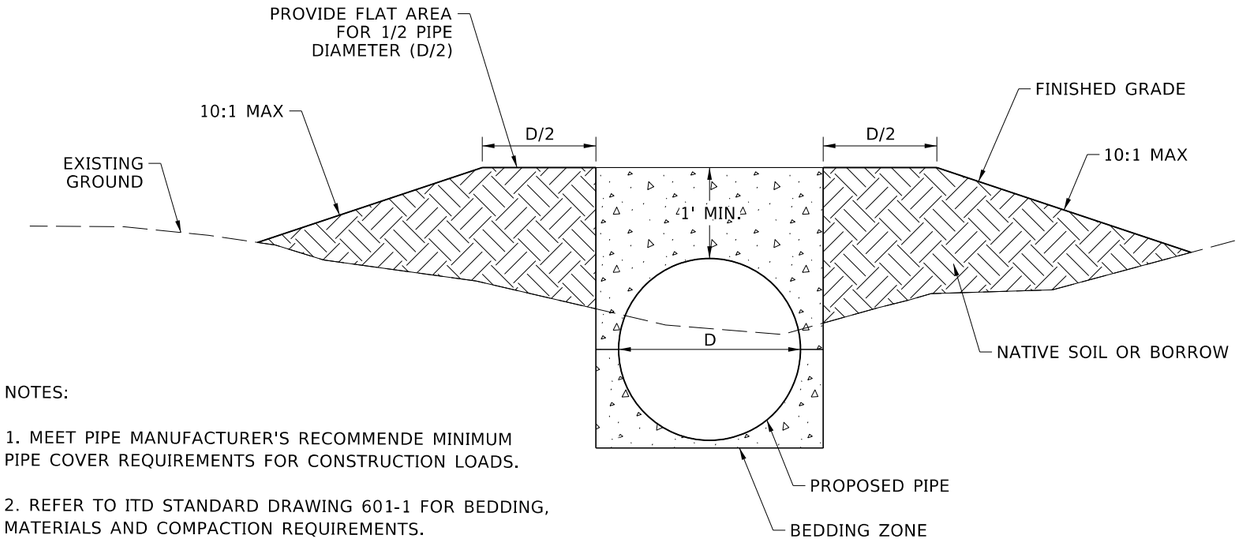

NOTES:

1. MEET PIPE MANUFACTURER'S RECOMMENDE MINIMUM PIPE COVER REQUIREMENTS FOR CONSTRUCTION LOADS.

2. REFER TO ITD STANDARD DRAWING 601-1 FOR BEDDING, MATERIALS AND COMPACTION REQUIREMENTS.

PIPE COVER DETAIL

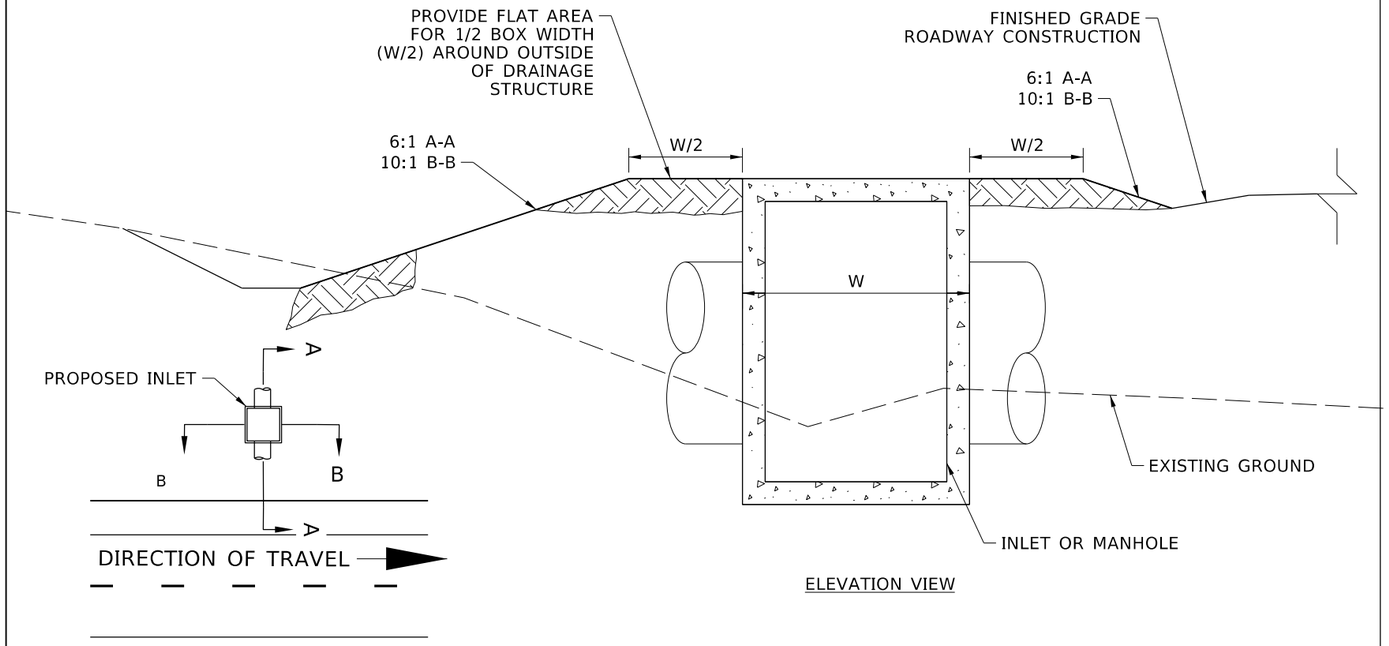

PLAN VIEW

ELEVATION VIEW

DRAINAGE STRUCTURE COVER DETAIL

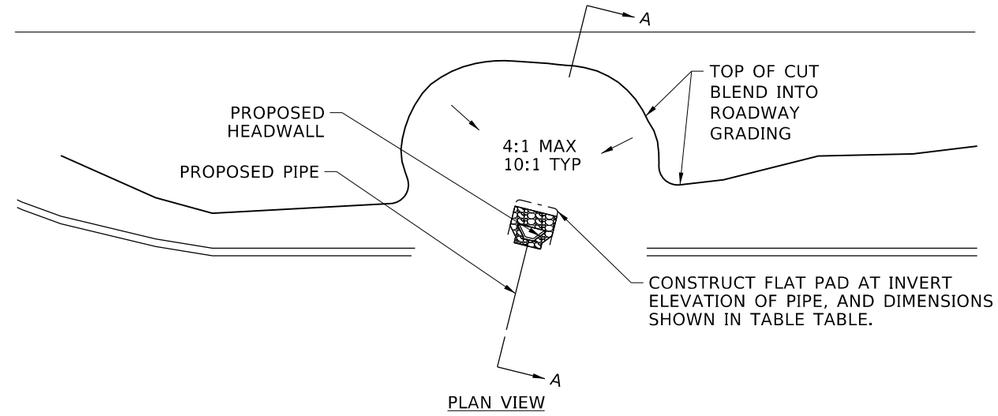

PLAN VIEW

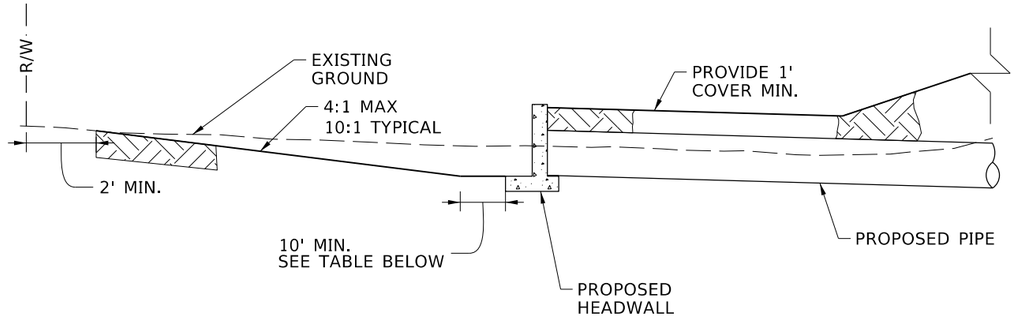

SECTION A-A

PIPE END DAYLIGHT DETAIL

LOCATION	PAD DIMENSIONS	ELEVATION	SLOPE
5909-RT	10' x 10'	5326.80'	10:1
5928-RT	10' x 10'	5316.60'	10:1
5959-LT	10' x 10'	5291.62'	10:1
6017-RT	10' x 10'	5280.89'	10:1
6066-LT	10' x 10'	5195.95'	10:1
6074-LT	10' x 10'	5194.00'	10:1
6253-RT	10' x 10'	5103.20'	10:1
6253-LT	10' x 10'	5107.76'	10:1
6293-RT	10' x 10'	5105.47'	10:1
6293-LT	10' x 10'	5107.20'	10:1
6411-RT	10' x 10'	5075.40'	10:1
6415-RT	10' x 10'	5073.30'	10:1

REVISIONS			
NO.	DATE	BY	DESCRIPTION

DESIGNED D. ABEDI	SCALES SHOWN ARE FOR 11" X 17" PRINTS ONLY	IDAHO TRANSPORTATION DEPARTMENT YOUR Safety→YOUR Mobility→YOUR Economic Opportunity DAVID EVANS AND ASSOCIATES INC.
DESIGN CHECKED C. MCALISTER		
DETAILED P. CONSALVO	CADD FILE NAME 24149_Drdt_D202.dgn	
DRAWING CHECKED C. MCALISTER	DRAWING DATE: November 21, 2025	

PROJECT NO.	DRAINAGE DETAIL	
A024(149)	US 20, BONNEVILLE COUNTY LINE TO MP 291 COVER & DAYLIGHT DETAILS	ENGLISH COUNTY BINGHAM/BONNEVILLE KEY NUMBER 24149 SHEET 305 OF 441

NOT APPROVED FOR CONSTRUCTION
INTERMEDIATE

21-NOV-2025 4:57:41 PM
$FILE$

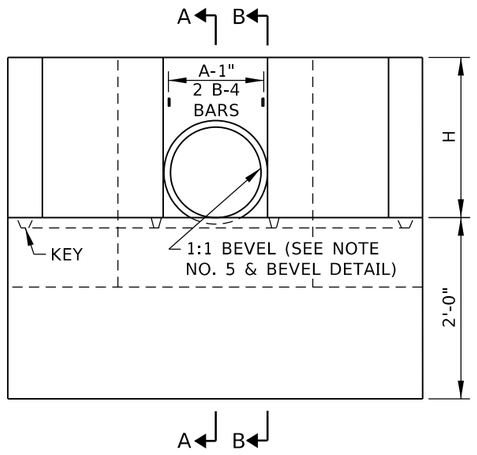

ELEVATION VIEW

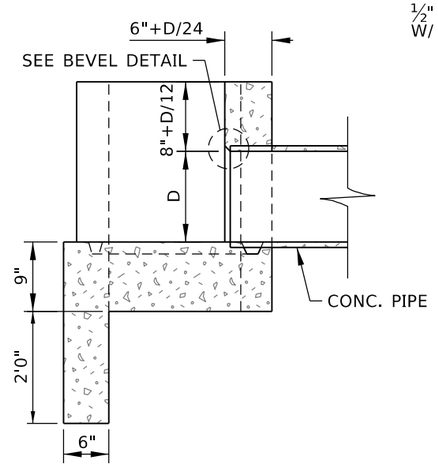

PROFILE VIEW
SECTION A-A

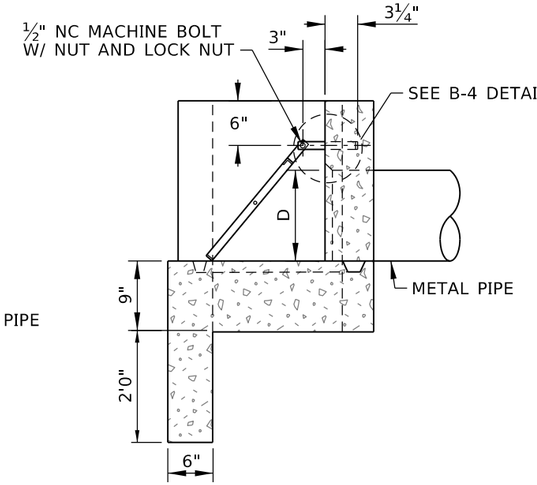

PROFILE VIEW
SECTION B-B

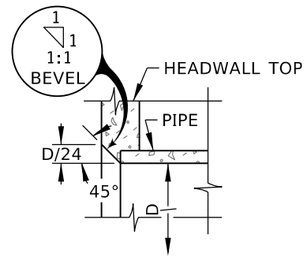

BEVEL DETAIL

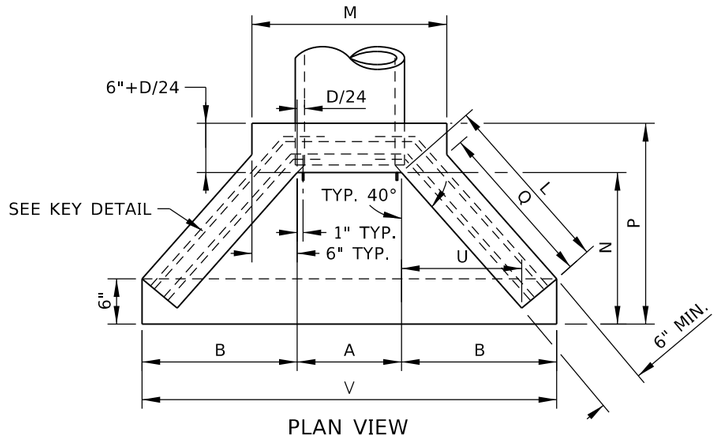

PLAN VIEW

MINOR STRUCTURE - HEADWALL

ITEM 609-025A MINOR STRUCTURES (24" HEADWALL)
ITEM 609-025B MINOR STRUCTURES (30" HEADWALL)
ITEM 609-025C MINOR STRUCTURES (36" HEADWALL)
ITEM 609-025D MINOR STRUCTURES (42" HEADWALL)
ITEM 609-025E MINOR STRUCTURES (48" HEADWALL)
N.T.S.

HEADWALL DIMENSION TABLE											
NOMINAL SIZE DIA. (IN.)	IN INCHES										
	D/24	A	B	H	L	M	N	P	Q	U	V
24	1	26	31⅜	34	41⅝	38	34	41	39⅜	26¾	88¾
30	1¼	32½	36¾	40½	50⅛	44½	40½	47¾	47⅞	32¼	106
36	1½	39	42¼	47	58⅝	51	47	54½	56⅜	37⅝	123½
42	1¾	45½	47⅝	53½	67⅛	57½	53½	61¼	64¼	43⅛	140¾
48	2	52	53⅛	60	75⅝	64	60	68	73⅜	48⅝	158¼

METAL REINFORCEMENT TABLE										
BAR	NOMINAL PIPE SIZE DIAMETER (IN.)									
	24		30		36		42		48	
	NO.	LGTH.	NO.	LGTH.	NO.	LGTH.	NO.	LGTH.	NO.	LGTH.
F-1	1	58	1	70¾	1	83	2	79&109	2	85&115
H-1A	2	112	2	135	2	158	2	182	2	204
H-1B	4	43	4	52	4	58	6	67	6	75
L-1	2	84¾	2	102	2	119	2	136¾	2	154¼
L-2	2	19	2	19	2	19	2	19	2	19
W-1A	2	87½	2	100½	2	114	2	127	2	140
W-1B	1	53	1	59	1	62	1	68	1	79
W-1C	2	36	2	40	2	43	2	47	2	54½
W-2	4	38¼	6	44¾	6	51	6	57½	8	64
TOT. WT.	62 lbs.		78 lbs.		89 lbs.		113 lbs.		133 lbs.	

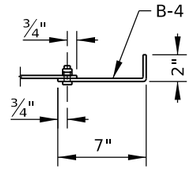

B-4 DETAIL

NOTE:

FOR INFORMATION NOT SHOWN, SEE "IDAHO STANDARD DRAWING 609-2"

REVISIONS			
NO.	DATE	BY	DESCRIPTION

DESIGNED D. ABEDI	SCALES SHOWN ARE FOR 11" X 17" PRINTS ONLY	IDAHO TRANSPORTATION DEPARTMENT YOUR Safety→YOUR Mobility→YOUR Economic Opportunity DAVID EVANS AND ASSOCIATES INC.
DESIGN CHECKED C. MCALISTER		
DETAILED P. CONSALVO	CADD FILE NAME 24149_Drdt_D203a.dgn	
DRAWING CHECKED C. MCALISTER	DRAWING DATE: November 21, 2025	

PROJECT NO.	DRAINAGE DETAIL	ENGLISH
A024(149)	US 20, MP 291 TO IDAHO FALLS MINOR STRUCTURE 12" TO 48" HEADWALL	COUNTY BINGHAM/BONNEVILLE KEY NUMBER 24149 SHEET 306 OF 441

NOT APPROVED
INTERMEDIATE
FOR CONSTRUCTION

November 21, 2025 4:57:55 PM
$FILE$

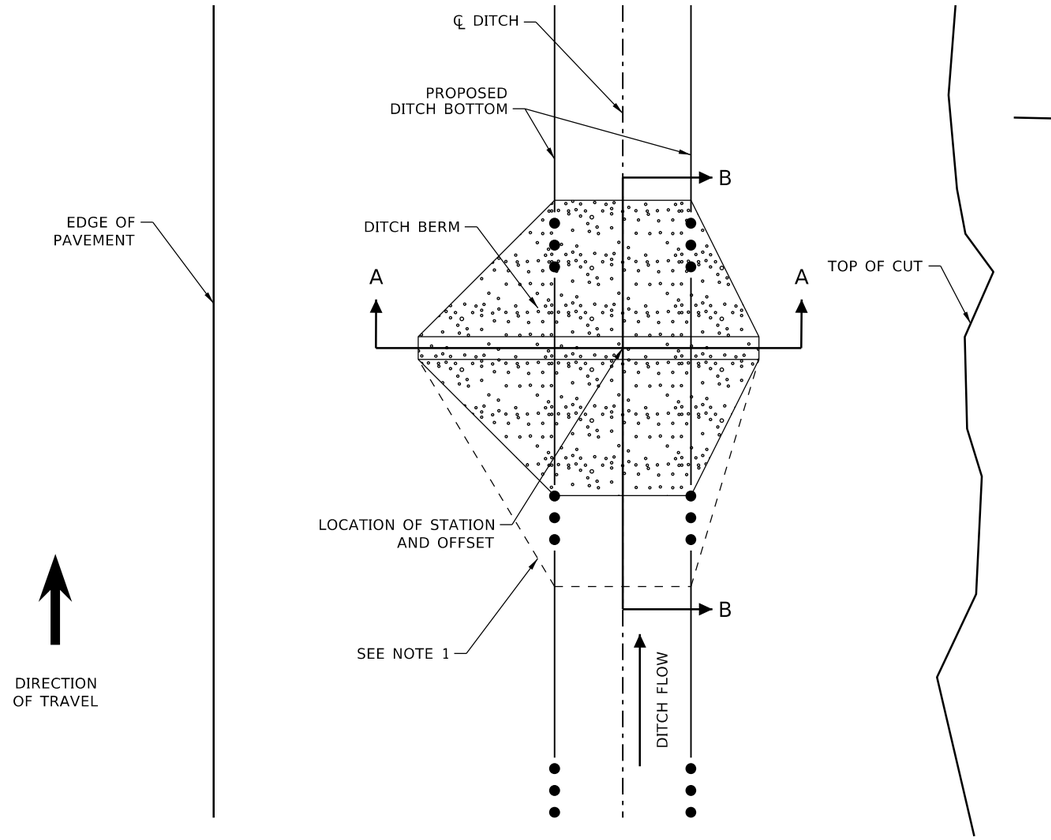

PLAN VIEW
DITCH BERM
ITEM S913-05A
N.T.S.

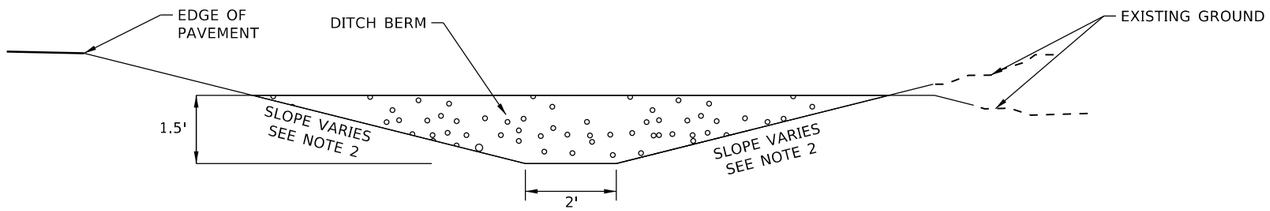

SECTION A-A
DITCH BERM
N.T.S.

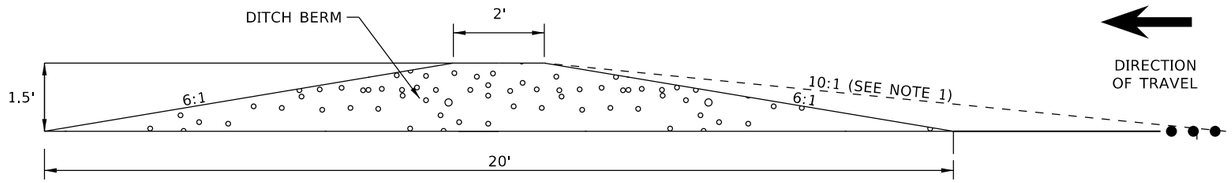

SECTION B-B
DITCH BERM
N.T.S.

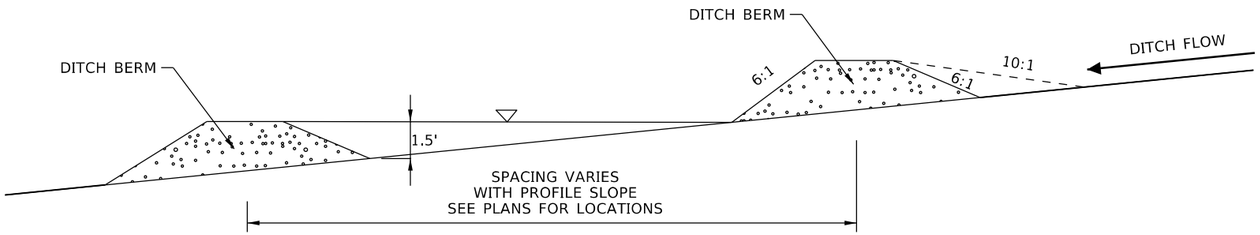

PROFILE VIEW
DITCH BERM
N.T.S.

NOTES

1. DITCH BERMS WITHIN CLEARZONE MUST UTILIZE A 10:1 SLOPE FACING ONCOMING TRAFFIC. THESE LOCATIONS ARE INDENTIFIED ON THE PLAN SHEETS.
2. SEE TYPICAL SECTIONS FOR DITCH SIDE SLOPE INFORMATION.

REVISIONS			
NO.	DATE	BY	DESCRIPTION

DESIGNED D. ABEDI	SCALES SHOWN ARE FOR 11" X 17" PRINTS ONLY	IDAHO TRANSPORTATION DEPARTMENT YOUR Safety→YOUR Mobility→YOUR Economic Opportunity
DESIGN CHECKED C. MCALISTER		
DETAILED P. CONSALVO	CADD FILE NAME 24149_Drdt_D204.dgn	
DRAWING CHECKED C. MCALISTER	DRAWING DATE: November 21, 2025	DAVID EVANS AND ASSOCIATES INC.

PROJECT NO.	DRAINAGE DETAIL	ENGLISH
A024(149)	US 20, MP 291 TO IDAHO FALLS SP DITCH BERM	COUNTY BINGHAM/BONNEVILLE KEY NUMBER 24149 SHEET 307 OF 441

NOT APPROVED
INTERMEDIATE
FOR CONSTRUCTION

November 21, 2025 4:58:07 PM
$FILEA$

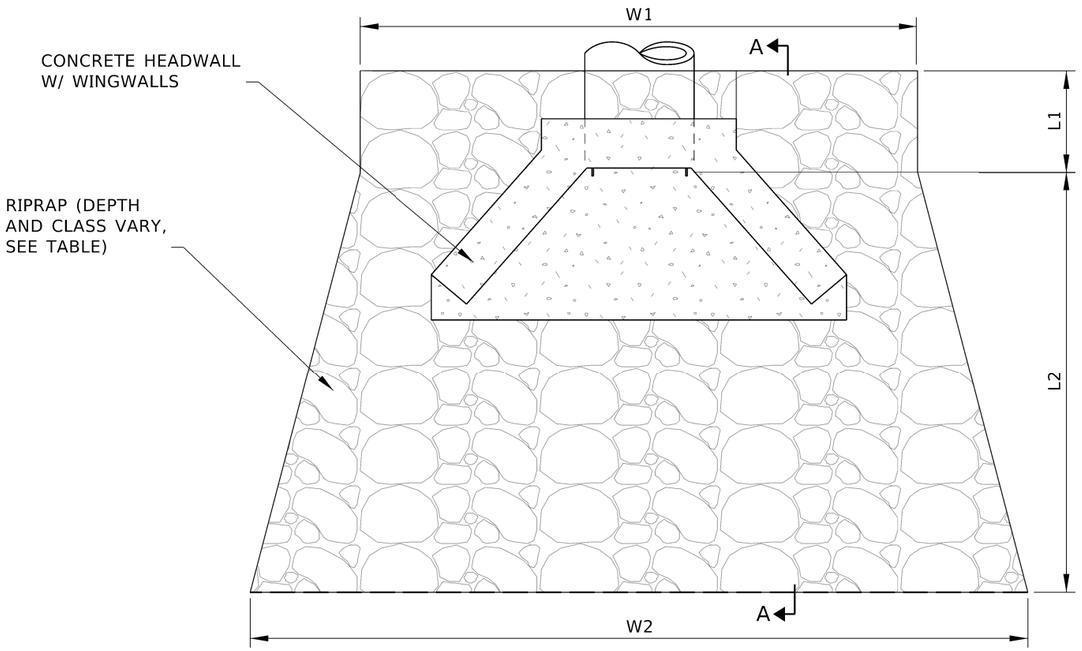

PLAN VIEW

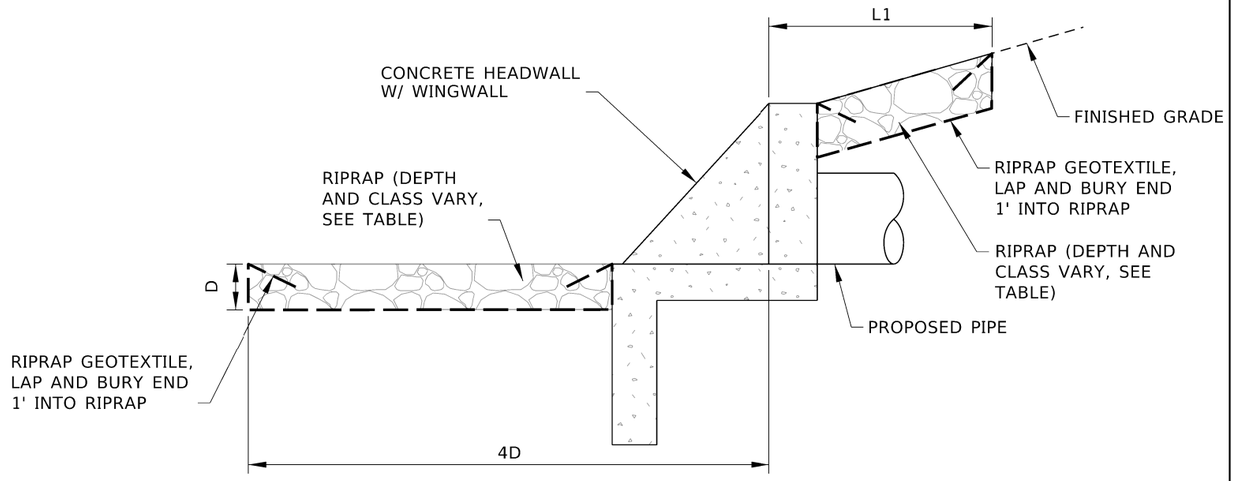

PROFILE VIEW
SECTION A-A

RIPRAP DIMENSION TABLE						
CULV SIZE DIA. (IN.)	IN FEET					
	W1	W2	L1	L2	D	CLASS
24	6	11.5	2	8	2	I
30	7.5	14.5	2	10	2	I
36	9	17	2	12	2	I
42	10.5	20	2	14	2	I
48	12	23	2	16	2	I
DUAL 48	18	33	2	24	2	I

RIPRAP AT HEADWALL DETAIL

REVISIONS			
NO.	DATE	BY	DESCRIPTION

DESIGNED D. ABEDI	SCALES SHOWN ARE FOR 11" X 17" PRINTS ONLY	IDAHO TRANSPORTATION DEPARTMENT YOUR Safety→YOUR Mobility→YOUR Economic Opportunity
DESIGN CHECKED C. MCALISTER		
DETAILED P. CONSALVO	CADD FILE NAME 24149_Drdt_D205.dgn	
DRAWING CHECKED C. MCALISTER	DRAWING DATE: November 21, 2025	DAVID EVANS AND ASSOCIATES INC.

PROJECT NO.	DRAINAGE DETAIL	
A024(149)	US 20, BONNEVILLE COUNTY LINE TO MP 291 RIPRAP AT HEADWALL DETAIL	*ENGLISH* COUNTY BINGHAM/BONNEVILLE KEY NUMBER 24149 SHEET 308 OF 441

NOT APPROVED
INTERMEDIATE
FOR CONSTRUCTION

21-NOV-2025 5:47:26 PM
$FILEA$

Appendix E

FIRM Maps

DAVID EVANS AND ASSOCIATES INC.

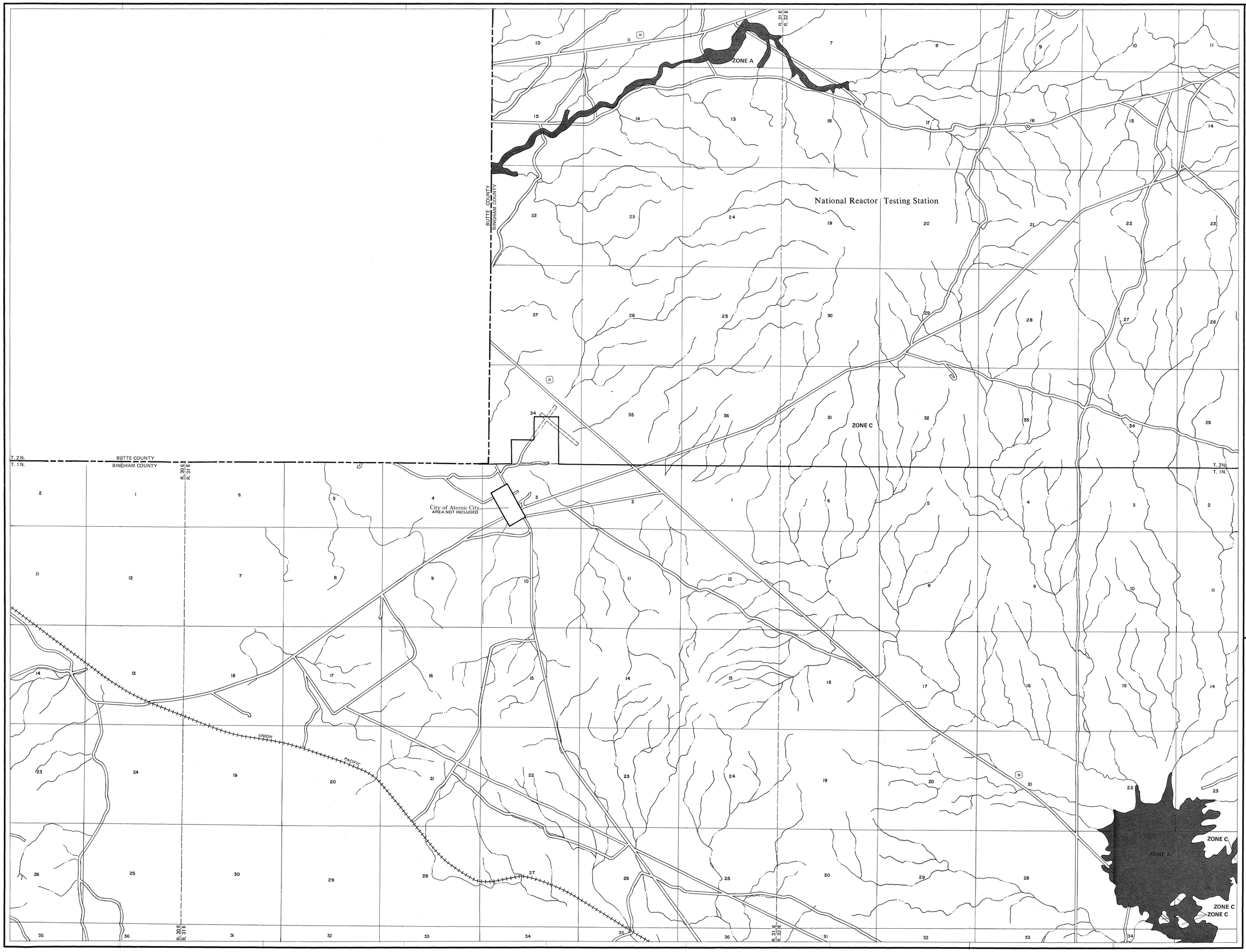

KEY TO MAP

500-Year Flood Boundary
100-Year Flood Boundary
Zone Designations* With Date of Identification e.g., 12/2/74
100-Year Flood Boundary
500-Year Flood Boundary

ZONE B / ZONE B

Base Flood Elevation Line With Elevation In Feet** 513

Base Flood Elevation In Feet Where Uniform Within Zone** (EL 987)

Elevation Reference Mark RM7×

River Mile •M1.5

**Referenced to the National Geodetic Vertical Datum of 1929

*EXPLANATION OF ZONE DESIGNATIONS

ZONE	EXPLANATION
A	Areas of 100-year flood; base flood elevations and flood hazard factors not determined.
A0	Areas of 100-year shallow flooding where depths are between one (1) and three (3) feet; average depths of inundation are shown, but no flood hazard factors are determined.
AH	Areas of 100-year shallow flooding where depths are between one (1) and three (3) feet; base flood elevations are shown, but no flood hazard factors are determined.
A1-A30	Areas of 100-year flood; base flood elevations and flood hazard factors determined.
A99	Areas of 100-year flood to be protected by flood protection system under construction; base flood elevations and flood hazard factors not determined.
B	Areas between limits of the 100-year flood and 500-year flood; or certain areas subject to 100-year flooding with average depths less than one (1) foot or where the contributing drainage area is less than one square mile; or areas protected by levees from the base flood. (Medium shading)
C	Areas of minimal flooding. (No shading)
D	Areas of undetermined, but possible, flood hazards.
V	Areas of 100-year coastal flood with velocity (wave action); base flood elevations and flood hazard factors not determined.
V1-V30	Areas of 100-year coastal flood with velocity (wave action); base flood elevations and flood hazard factors determined.

NOTES TO USER

Certain areas not in the special flood hazard areas (zones A and V) may be protected by flood control structures.

This map is for flood insurance purposes only; it does not necessarily show all areas subject to flooding in the community or all planimetric features outside special flood hazard areas.

For adjoining map panels, see separately printed Index To Map Panels.

INITIAL IDENTIFICATION:
JUNE 20,1978

FLOOD HAZARD BOUNDARY MAP REVISIONS:

FLOOD INSURANCE RATE MAP EFFECTIVE:
NOVEMBER 15, 1979

FLOOD INSURANCE RATE MAP REVISIONS:

Refer to the FLOOD INSURANCE RATE MAP EFFECTIVE date shown on this map to determine when actuarial rates apply to structures in the zones where elevations or depths have been established.

To determine if flood insurance is available in this community, contact your insurance agent, or call the National Flood Insurance Program, at (800) 638-6620, or (800) 424-8872.

APPROXIMATE SCALE
2000 0 2000 FEET

NATIONAL FLOOD INSURANCE PROGRAM

FIRM
FLOOD INSURANCE RATE MAP

BINGHAM COUNTY, IDAHO
(UNINCORPORATED AREAS)

PANEL 100 OF 750
(SEE MAP INDEX FOR PANELS NOT PRINTED)

COMMUNITY-PANEL NUMBER
160018 0100 B

EFFECTIVE DATE:
NOVEMBER 15, 1979

U.S. DEPARTMENT OF HOUSING AND URBAN DEVELOPMENT
FEDERAL INSURANCE ADMINISTRATION

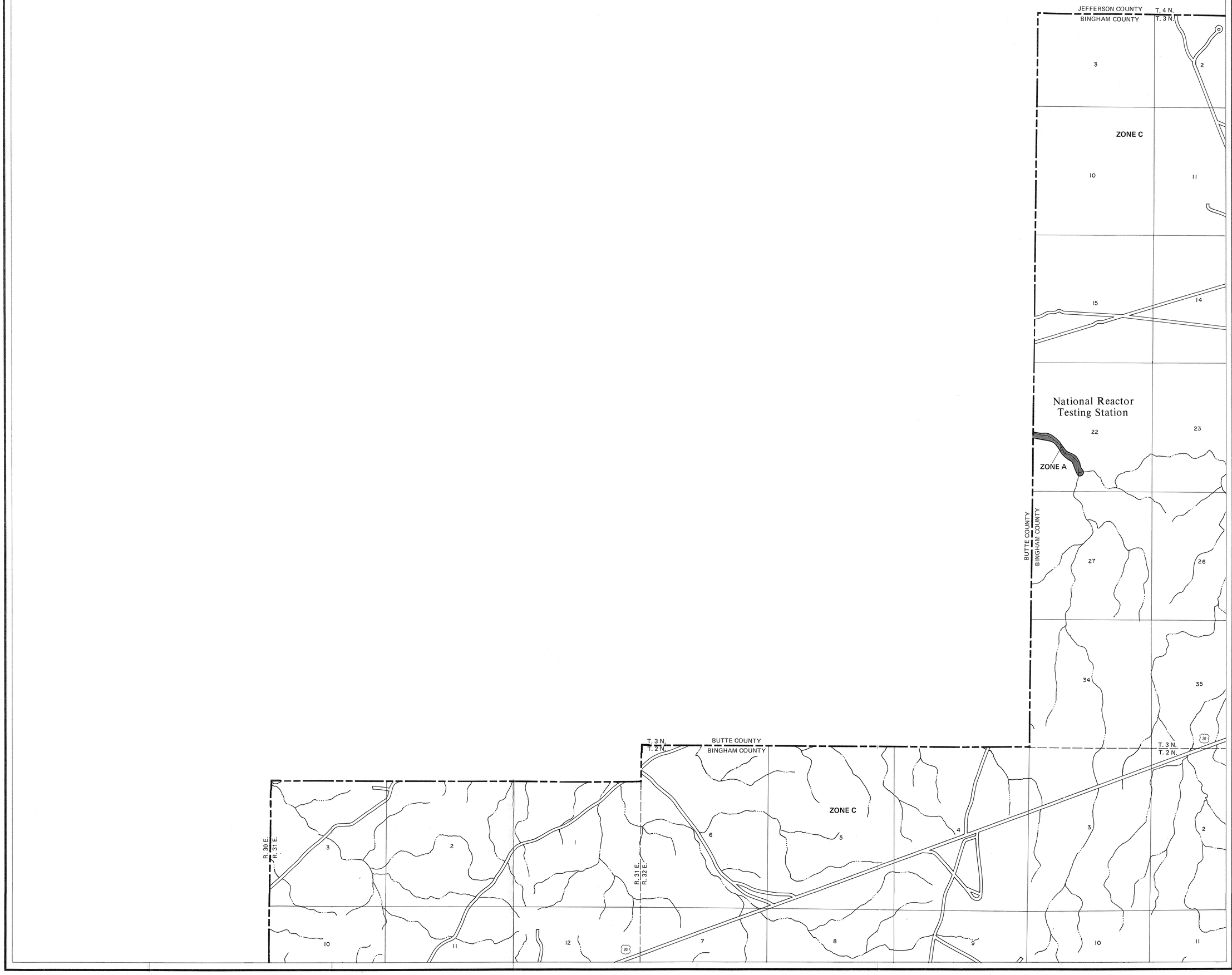

KEY TO MAP

500-Year Flood Boundary

100-Year Flood Boundary

Zone Designations* With Date of Identification e.g., 12/2/74

100-Year Flood Boundary

500-Year Flood Boundary

ZONE B / ZONE A1 DATE / ZONE A6 DATE / ZONE B

Base Flood Elevation Line With Elevation In Feet** 513

Base Flood Elevation in Feet Where Uniform Within Zone** (EL 987)

Elevation Reference Mark RM7×

River Mile •M1.5

**Referenced to the National Geodetic Vertical Datum of 1929

*EXPLANATION OF ZONE DESIGNATIONS

ZONE	EXPLANATION
A	Areas of 100-year flood; base flood elevations and flood hazard factors not determined.
A0	Areas of 100-year shallow flooding where depths are between one (1) and three (3) feet; average depths of inundation are shown, but no flood hazard factors are determined.
AH	Areas of 100-year shallow flooding where depths are between one (1) and three (3) feet; base flood elevations are shown, but no flood hazard factors are determined.
A1-A30	Areas of 100-year flood; base flood elevations and flood hazard factors determined.
A99	Areas of 100-year flood to be protected by flood protection system under construction; base flood elevations and flood hazard factors not determined.
B	Areas between limits of the 100-year flood and 500-year flood; or certain areas subject to 100-year flooding with average depths less than one (1) foot or where the contributing drainage area is less than one square mile; or areas protected by levees from the base flood. (Medium shading)
C	Areas of minimal flooding. (No shading)
D	Areas of undetermined, but possible, flood hazards.
V	Areas of 100-year coastal flood with velocity (wave action); base flood elevations and flood hazard factors not determined.
V1-V30	Areas of 100-year coastal flood with velocity (wave action); base flood elevations and flood hazard factors determined.

NOTES TO USER

Certain areas not in the special flood hazard areas (zones A and V) may be protected by flood control structures.

This map is for flood insurance purposes only; it does not necessarily show all areas subject to flooding in the community or all planimetric features outside special flood hazard areas.

For adjoining map panels, see separately printed Index To Map Panels.

INITIAL IDENTIFICATION:
JUNE 20,1978

FLOOD HAZARD BOUNDARY MAP REVISIONS:

FLOOD INSURANCE RATE MAP EFFECTIVE:
NOVEMBER 15, 1979

FLOOD INSURANCE RATE MAP REVISIONS:

Refer to the FLOOD INSURANCE RATE MAP EFFECTIVE date shown on this map to determine when actuarial rates apply to structures in the zones where elevations or depths have been established.

To determine if flood insurance is available in this community, contact your insurance agent, or call the National Flood Insurance Program, at (800) 638-6620, or (800) 424-8872.

APPROXIMATE SCALE
2000 0 2000 FEET

NATIONAL FLOOD INSURANCE PROGRAM

FIRM
FLOOD INSURANCE RATE MAP

BINGHAM COUNTY, IDAHO
(UNINCORPORATED AREAS)

PANEL 25 OF 750
(SEE MAP INDEX FOR PANELS NOT PRINTED)

COMMUNITY-PANEL NUMBER
160018 0025 B

EFFECTIVE DATE:
NOVEMBER 15, 1979

U.S. DEPARTMENT OF HOUSING AND URBAN DEVELOPMENT
FEDERAL INSURANCE ADMINISTRATION

JEFFERSON COUNTY
BONNEVILLE COUNTY

National Reactor Testing Station

BINGHAM COUNTY
BONNEVILLE COUNTY

T. 4 N.
T. 3 N.

R. 34 E.
R. 35 E.

TRAIL

ZONE C

LIMIT OF STUDY

ZONE A

ZONE A

ZONE C

T. 3 N.
T. 2 N.

R 33 E
R 34 E

KEY TO MAP

500-Year Flood Boundary

100-Year Flood Boundary

Zone Designations* With Date of Identification e.g., 12/2/74

100-Year Flood Boundary

500-Year Flood Boundary

ZONE B

ZONE A1 DATE / ZONE A5 DATE

ZONE B

Base Flood Elevation Line With Elevation In Feet** — 513

Base Flood Elevation in Feet Where Uniform Within Zone** (EL 987)

Elevation Reference Mark RM7 ×

River Mile • M1.5

**Referenced to the National Geodetic Vertical Datum of 1929

*EXPLANATION OF ZONE DESIGNATIONS

ZONE	EXPLANATION
A	Areas of 100-year flood; base flood elevations and flood hazard factors not determined.
A0	Areas of 100-year shallow flooding where depths are between one (1) and three (3) feet; average depths of inundation are shown, but no flood hazard factors are determined.
AH	Areas of 100-year shallow flooding where depths are between one (1) and three (3) feet; base flood elevations are shown, but no flood hazard factors are determined.
A1-A30	Areas of 100-year flood; base flood elevations and flood hazard factors determined.
A99	Areas of 100-year flood to be protected by flood protection system under construction; base flood elevations and flood hazard factors not determined.
B	Areas between limits of the 100-year flood and 500-year flood; or certain areas subject to 100-year flooding with average depths less than one (1) foot or where the contributing drainage area is less than one square mile; or areas protected by levees from the base flood. (Medium shading)
C	Areas of minimal flooding. (No shading)
D	Areas of undetermined, but possible, flood hazards.
V	Areas of 100-year coastal flood with velocity (wave action); base flood elevations and flood hazard factors not determined.
V1-V30	Areas of 100-year coastal flood with velocity (wave action); base flood elevations and flood hazard factors determined.

NOTES TO USER

Certain areas not in the special flood hazard areas (zones A and V) may be protected by flood control structures.

This map is for flood insurance purposes only; it does not necessarily show all areas subject to flooding in the community or all planimetric features outside special flood hazard areas.

For adjoining map panels, see separately printed Index To Map Panels.

INITIAL IDENTIFICATION:
OCTOBER 18, 1974

FLOOD HAZARD BOUNDARY MAP REVISIONS:
AUGUST 2, 1977
FEBRUARY 27, 1979

FLOOD INSURANCE RATE MAP EFFECTIVE:
NOVEMBER 4, 1981

FLOOD INSURANCE RATE MAP REVISIONS:

Refer to the FLOOD INSURANCE RATE MAP EFFECTIVE date shown on this map to determine when actuarial rates apply to structures in the zones where elevations or depths have been established.

To determine if flood insurance is available in this community, contact your insurance agent, or call the National Flood Insurance Program, at (800) 638-6620.

APPROXIMATE SCALE
2000 0 2000 FEET

NATIONAL FLOOD INSURANCE PROGRAM

FIRM
FLOOD INSURANCE RATE MAP

BONNEVILLE COUNTY, IDAHO
(UNINCORPORATED AREAS)

PANEL 25 OF 600
(SEE MAP INDEX FOR PANELS NOT PRINTED)

COMMUNITY-PANEL NUMBER
160027 0025 C

EFFECTIVE DATE:
NOVEMBER 4, 1981

federal emergency management agency
federal insurance administration

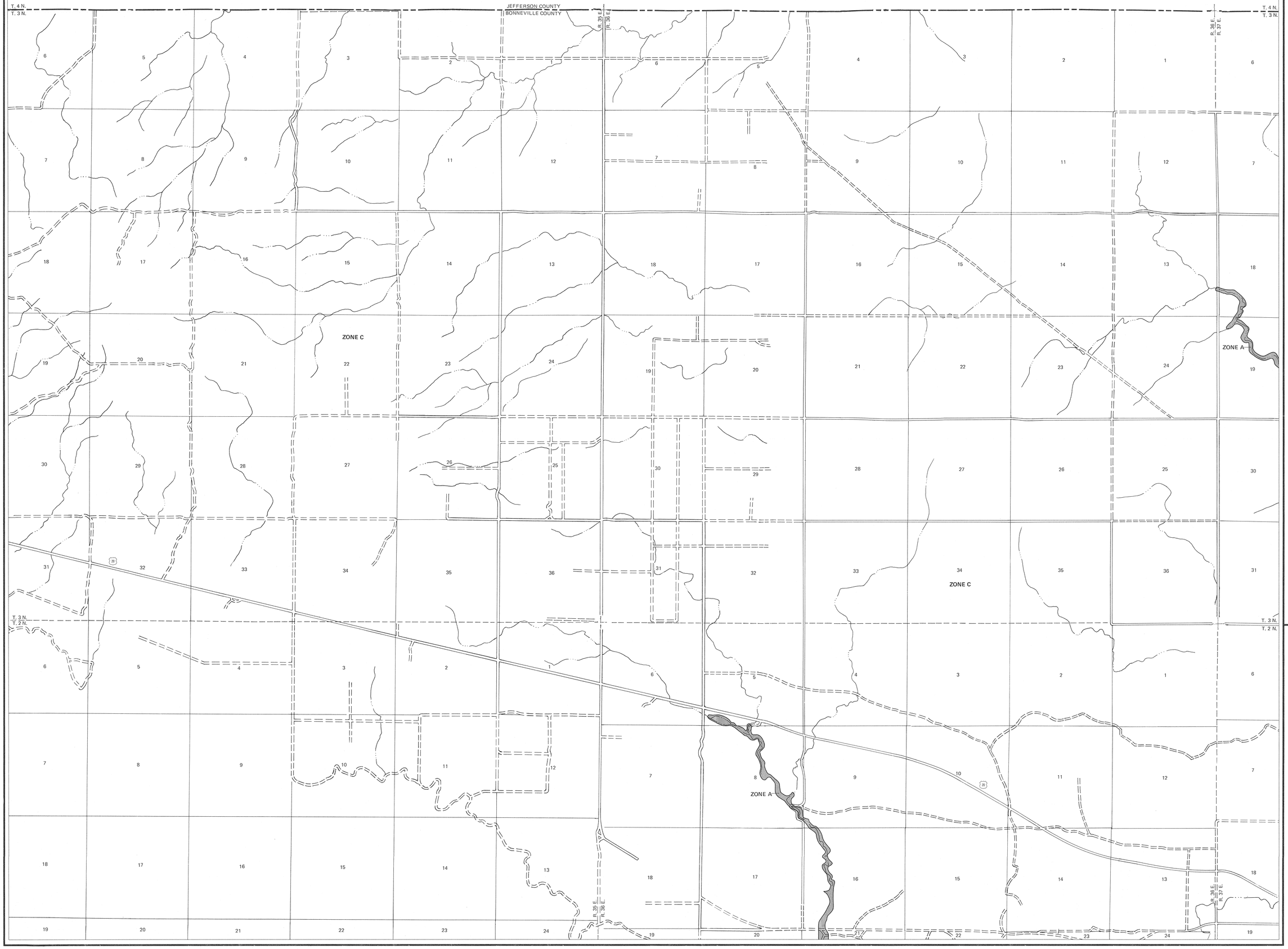

KEY TO MAP

500-Year Flood Boundary	ZONE B
100-Year Flood Boundary	ZONE A1 DATE / ZONE A5 DATE
Zone Designations* With Date of Identification e.g., 12/2/74	
100-Year Flood Boundary	
500-Year Flood Boundary	ZONE B
Base Flood Elevation Line With Elevation In Feet**	513
Base Flood Elevation in Feet Where Uniform Within Zone**	(EL 987)
Elevation Reference Mark	RM7 ×
River Mile	• M1.5

**Referenced to the National Geodetic Vertical Datum of 1929

*EXPLANATION OF ZONE DESIGNATIONS

ZONE	EXPLANATION
A	Areas of 100-year flood; base flood elevations and flood hazard factors not determined.
A0	Areas of 100-year shallow flooding where depths are between one (1) and three (3) feet; average depths of inundation are shown, but no flood hazard factors are determined.
AH	Areas of 100-year shallow flooding where depths are between one (1) and three (3) feet; base flood elevations are shown, but no flood hazard factors are determined.
A1-A30	Areas of 100-year flood; base flood elevations and flood hazard factors determined.
A99	Areas of 100-year flood to be protected by flood protection system under construction; base flood elevations and flood hazard factors not determined.
B	Areas between limits of the 100-year flood and 500-year flood; or certain areas subject to 100-year flooding with average depths less than one (1) foot or where the contributing drainage area is less than one square mile; or areas protected by levees from the base flood. (Medium shading)
C	Areas of minimal flooding. (No shading)
D	Areas of undetermined, but possible, flood hazards.
V	Areas of 100-year coastal flood with velocity (wave action); base flood elevations and flood hazard factors not determined.
V1-V30	Areas of 100-year coastal flood with velocity (wave action); base flood elevations and flood hazard factors determined.

NOTES TO USER

Certain areas not in the special flood hazard areas (zones A and V) may be protected by flood control structures.

This map is for flood insurance purposes only; it does not necessarily show all areas subject to flooding in the community or all planimetric features outside special flood hazard areas.

For adjoining map panels, see separately printed Index To Map Panels.

INITIAL IDENTIFICATION:
OCTOBER 18, 1974

FLOOD HAZARD BOUNDARY MAP REVISIONS:
AUGUST 2, 1977
FEBRUARY 27, 1979

FLOOD INSURANCE RATE MAP EFFECTIVE:
NOVEMBER 4, 1981

FLOOD INSURANCE RATE MAP REVISIONS:

Refer to the FLOOD INSURANCE RATE MAP EFFECTIVE date shown on this map to determine when actuarial rates apply to structures in the zones where elevations or depths have been established.

To determine if flood insurance is available in this community, contact your insurance agent, or call the National Flood Insurance Program, at (800) 638-6620.

APPROXIMATE SCALE
2000 0 2000 FEET

NATIONAL FLOOD INSURANCE PROGRAM

FIRM
FLOOD INSURANCE RATE MAP

BONNEVILLE COUNTY, IDAHO
(UNINCORPORATED AREAS)

PANEL 50 OF 600
(SEE MAP INDEX FOR PANELS NOT PRINTED)

COMMUNITY-PANEL NUMBER
160027 0050 C

EFFECTIVE DATE:
NOVEMBER 4, 1981

federal emergency management agency
federal insurance administration

Appendix F

Geotechnical References

DAVID EVANS AND ASSOCIATES INC.

From: Stan Crawforth <Stan.Crawforth@shanwil.com>
Sent: Thursday, July 24, 2025 6:28 PM
To: Kirk Kauer <kirk.kauer@horrocks.com>
Cc: Kelly Hoopes <kellyh@horrocks.com>; Cary McAlister <cary.mcalister@deainc.com>; Travis Thomsen <Travis.Thomsen@shanwil.com>
Subject: US-20, Puzzel to IF -- In-situ Infiltration Results

Kirk-
Attached are the permeability test results performed at the requested locations along the corridor. The lat/long locations are listed on the attached report.
These are in-situ tests in the upper wind-blown silty sand stratum.

I recommend that you not use the measured values for sizing infiltration facilities. Rather, reduce the measured values to develop a design value.
For the Guelph Infiltration (GI) test, reduce the measured rate by about 50%.

Best, -Stan



Stan Crawforth, P.E.
VICE PRESIDENT | GEOTECHNICAL ENGINEER
SHANNON & WILSON

5260 West Chinden Boulevard
Boise, ID 83714
shannonwilson.com
Phone: **(208) 658-8700**
Mobile: **(801) 400-4004**
stan.crawforth@shanwil.com

Shannon & Wilson
5260 Chinden Blvd.
Boise, Idaho 83714
Phone:(208) 658-8700
Fax: (208) 658-8703

Report to: Horrocks
Project: US-20, Bonneville Co Line to IF
Report Date: 7/23/2025
Project No.: 112895 KN24394

Material Information

Date Tested: 7/17 & 7/18/2025
Tested By: Shannon & Wilson
Weather Condition: Partly Cloudy

Test Results

In-Situ Permeability, Guelph Permeameter Method (Constant Head)

Location	Soil Description	Well Depth	Hydraulic Conductivity cm/sec
GI-1; Lat. 43.5044444 Long. -112.8708333	Sandy Silt; Dry	12"	$1.82x10^{-3}$
GI-2; Lat. 43.510466 Long. -112.784547	Sandy Silt; Dry	12"	$1.96x10^{-3}$
GI-3; Lat. 43.53500 Long. -112.687777	Silty Sand; Dry	12"	$1.18x10^{-3}$
GI-4; Lat. 43.53507 Long. -111.616752	Silty Sand; Dry	12"	$2.28x10^{-3}$
GI-5; Lat. 43.552290 Long. -112.528025	Silty Sand; Dry	12"	$2.35x10^{-3}$
GI-6; Lat. 43.550187 Long. -112.396504	Silty Sand; Dry	12"	$2.34x10^{-3}$
GI-7; Lat. 43.529803 Long. -112.275804	Silt with Sand; Dry	12"	$7.96x10^{-5}$
GI-8; Lat. 43.512776 Long. -112.200431	Poorly Graded Gravel w/Sand; Dry	12"	$2.49x10^{-3}$

Reviewed By: Stan Crawforth

Project	Location	Location	Measured	Measured	Design /2	Notes
			cm/s	in/hr	in/hr	
KN	MP	STA/OFF	1	1417.3	Conversion	
24149	264.6	5034-R	0.00182	2.6	1.3	
24149	269.1	5265-R	0.00196	2.8	1.4	
24149	274.2	5537-R	0.00118	1.7	0.8	
24149	278.0	5736-R	0.00228	3.2	1.6	
23244	282.4	5972-R	0.00235	3.3	1.7	
23244	289.2	6236-R	0.00234	3.3	1.7	
23244	295.3	6656-R	0.0000796	0.1	0.1	Outlier
23244	299.4	6687-R	0.00249	3.5	1.8	
			Average	2.9	**1.5**	
			Design	Design	**1.0**	